HALE KULA DRIVEWAY RIGHT-OF-WAY PAVING

TAX MAP KEY: (3) 1-7-007:042 & (3) 1-7-007:044

HALE KULA ROAD
OLA'A HOMESTEAD PRESERVATION LOTS
PUNA, HAWAII

DEPARTMENT OF HAWAIIAN HOMELANDS
LAND DEVELOPMENT DIVISION
91-5420 KAPOLEI PARKWAY
KAPOLEI, HI 96707

HAWAI'I ISLAND MAP

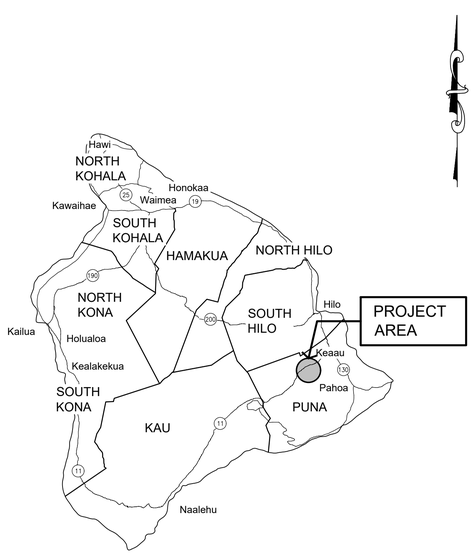

NOT TO SCALE

LOCATION MAP

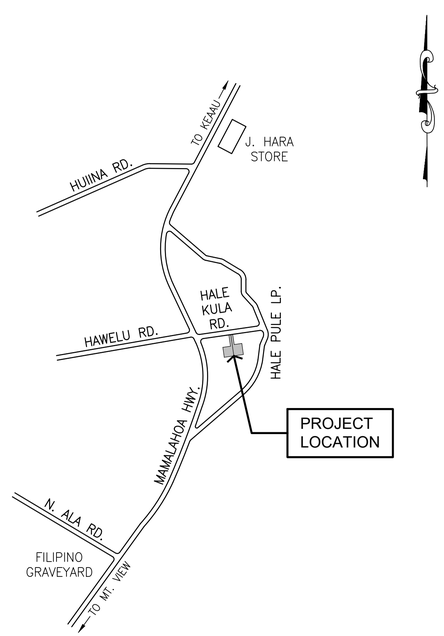

NOT TO SCALE

VICINITY MAP

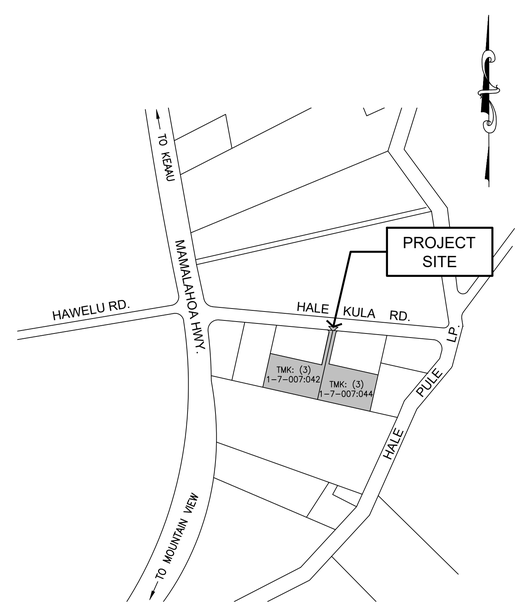

NOT TO SCALE

DRAWING INDEX

SHT. NO.	DWG. NO.	DESCRIPTION
1	T-1	TITLE SHEET AND DRAWING INDEX
2	C-1	NOTES AND TRAFFIC CONTROL PLAN
3	C-2	SITE PLAN AND DRIVEWAY SECTION

Okahara and Associates Inc.
CONSULTING ENGINEERS

HILO: 200 KOHOLA STREET
HILO, HAWAII 96720
PH: (808) 961-5527
FAX: (808) 961-5529

HONOLULU: 677 ALA MOANA BLVD., SUITE 703
HONOLULU, HAWAII 96813
PH: (808) 524-1224
FAX: (808) 521-3151

LENNIE OKANO-KENDRICK
Licensed Professional Engineer
No.11108-C
HAWAII, U.S.A.

This work was prepared by me or under my supervision and construction to this project will be under my observation

Expiration Date of License 4/30/20

Revisions

No.	Date	Description

Project

HALE KULA DRIVEWAY RIGHT-OF-WAY PAVING

TMKs: (3) 1 -7 -007 : 042 and 044
HALE KUA ROAD
OLA'A HOMESTEAD RESERVATION LOTS, PUNA, HAWAII

Sheet Title

TITLE SHEET AND DRAWING INDEX

Project Director: 219-064 (Project No.)
Drawn By: LG
Checked By: LOK
CAD File Name:
Scale:
Date: OCTOBER 2019
Const. Issue Date:

T-1

1 of 3 Sheets

O:\OPROJ\2019\219-064_HALE_KULA_DRIVEWAY\CADD\SHEETS\TITLE_SHT.DWG

NOTES FOR WORK WITHIN THE COUNTY RIGHT-OF-WAY

1. ALL CONSTRUCTION SHALL BE PERFORMED IN ACCORDANCE WITH STANDARD DETAILS AND STANDARD SPECIFICATIONS OF THE DEPARTMENT OF PUBLIC WORKS, COUNTY OF HAWAII AND THE HAWAII STANDARD SPECIFICATIONS FOR ROAD, BRIDGE AND PUBLIC WORKS CONSTRUCTION, 2005 EDITION, UNLESS OTHERWISE SPECIFIED ON THE PLANS OR SPECIFICATIONS.
2. ALL CONSTRUCTION LINES, GRADES AND SURVEY MONUMENT STAKEOUTS SHALL BE MADE BY LICENSED SURVEYORS.
3. THE CONTRACTOR SHALL CONDUCT ALL TESTS AS REQUIRED BY THE DPW AND/OR ENGINEER AND THE CONTRACT DOCUMENTS AND BE RESPONSIBLE FOR ALL EXPENSES INCURRED IN CONDUCTING THESE TESTS.
4. THE CONTRACTOR SHALL PROVIDE AT LEAST ONE (1) LANE FOR TRAFFIC MOVEMENT AT ALL TIMES. TWO (2) LANES FOR TRAFFIC MOVEMENT SHALL BE PROVIDED BETWEEN THE HOURS OF 3:00 P.M. AND 8:30 A.M. ALL INTERSECTIONS MUST REMAIN OPEN TO TRAFFIC AT ALL TIMES.
5. THE CONTRACTOR SHALL VERIFY THE LOCATION OF ALL EXISTING UTILITIES, WHETHER SHOWN ON THE PLANS OR NOT, AND SHALL BE RESPONSIBLE FOR THE REPAIR OR REPLACEMENT OF SAME IN THE EVENT OF DAMAGES DUE TO HIS CONSTRUCTION PRACTICES. THE CONTRACTOR SHALL COORDINATE AND SCHEDULE HIS WORK WITH THE RESPECTIVE UTILITY COMPANIES AT NO ADDITIONAL COST. THE CONTRACTOR SHALL BE RESPONSIBLE IF NECESSARY IN RESCHEDULING HIS WORK AND ADJUSTING LABOR AND EQUIPMENTS TO ACCOMMODATE THE UTILITY WORK AT NO COST TO THE COUNTY.
6. THE CONTRACTOR SHALL PROVIDE AND INSTALL ALL TRAFFIC CONTROL DEVICES IN CONFORMANCE WITH THE CURRENT EDITION OF THE "MANUAL ON UNIFORM TRAFFIC CONTROL DEVICES FOR STREETS AND HIGHWAYS," & AS DIRECTED BY THE DEPARTMENT OF PUBLIC WORKS.
7. ALL DIMENSIONS AND DETAILS SHOWN ON THE CONSTRUCTION DRAWINGS AND/OR SPECIFICATIONS SHALL BE CHECKED AND VERIFIED PRIOR TO THE START OF CONSTRUCTION, AND ANY DISCREPANCIES SHALL BE IMMEDIATELY BROUGHT TO THE ATTENTION OF THE ENGINEER FOR CLARIFICATION.
8. THE CONTRACTOR SHALL NOTIFY THE DEPARTMENT OF PUBLIC WORKS 48 HOURS BEFORE THE COMMENCEMENT OF ANY UTILITY LINE WORK TO SCHEDULE A FIELD REVIEW AND SECURE APPROVAL OF THE PROPOSED UTILITY LINE LOCATION WITHIN THE COUNTY RIGHT-OF-WAY.
9. THE PROPOSED UTILITY LINE LOCATION SHALL BE LAID OUT IN THE FIELD PRIOR TO THE CONDUCTING OF THE FIELD REVIEW BY THE DEPARTMENT OF PUBLIC WORKS.
10. FIELD ADJUSTMENTS SHALL BE MADE AS DIRECTED BY THE DEPARTMENT OF PUBLIC WORKS PRIOR TO THE COMMENCEMENT OF ANY UTILITY LINE WORK.
11. THE REQUIRED PERMIT, UNDER CHAPTER 22, ARTICLE 4, SECTION DIVISION I OF THE HAWAII COUNTY CODE, SHALL BE OBTAINED FROM THE DEPARTMENT OF PUBLIC WORKS BY THE CONTRACTOR FOR WORK WITHIN THE COUNTY RIGHT-OF-WAY.
12. ANY PAVEMENT OUTSIDE THE CONTRACT ZONE LIMITS DAMAGED AS A RESULT OF CONSTRUCTION OPERATIONS SHALL BE RESTORED TO ITS ORIGINAL CONDITION, OR BETTER, AS DIRECTED BY THE DPW.
13. THE EXISTING IMPROVEMENTS ON THE PROJECT LIMITS AND IN ADJACENT AREAS THAT ARE NOT TO BE REMOVED SHALL BE PRESERVED AND PROTECTED. ANY AND ALL DAMAGES RESULTING FROM THE CONTRACTOR'S CONSTRUCTION OPERATIONS SHALL BE REPLACED AND REPAIRED TO THE ORIGINAL OR BETTER CONDITION, TO THE SATISFACTION OF THE OWNER AND PAID FOR BY THE CONTRACTOR. THE CONTRACTOR SHALL OBTAIN A WRITTEN APPROVAL FROM EACH AFFECTED PROPERTY OWNER TO BE SUBMITTED TO THE ENGINEER.
14. NO MATERIAL, EXCEPT THE TRENCH EXCAVATED MATERIAL, SHALL BE STOCKPILED CLOSER THAN SIX (6) FEET FROM THE EXISTING EDGE OF PAVEMENT.
15. NO CONSTRUCTION EQUIPMENT SHALL BE PARKED WITHIN THE ROAD RIGHT-OF-WAY IN SUCH A MANNER THAT THE EQUIPMENT WILL OBSTRUCT THE NORMAL MOVEMENT AND SIGHT DISTANCE OF THE DRIVING MOTORIST, EXCEPT DURING ACTUAL WORKING HOURS.
16. DURING NON-WORKING HOURS, ALL SIGNS THAT DO NOT PERTAIN TO THE CONSTRUCTION ACTIVITY, SUCH AS "MEN WORKING" AND "FLAGMAN AHEAD" SHALL BE COVERED OR LAID DOWN. HOWEVER, ALL SIGNS NECESSARY FOR THE SAFETY OF THE PUBLIC SHALL BE MAINTAINED.
17. ANY PAVEMENT MARKINGS, STRUCTURES, AND APPURTENANCES (WITHIN OR OUTSIDE OF THE CONTRACT ZONE LIMITS) DAMAGED AND/OR WORN AWAY UNDER THE PERMIT BY THE UTILITY LINE INSTALLATION SHALL BE REPAINTED OR RECONSTRUCTED AS DIRECTED BY THE DEPARTMENT OF PUBLIC WORKS.
18. THE CONTRACTOR SHALL BE RESPONSIBLE FOR CONFORMANCE WITH THE APPLICABLE PROVISIONS OF THE WATER QUALITY AND WATER POLLUTION CONTROL STANDARDS CONTAINED IN HAWAII ADMINISTRATIVE RULES, TITLE 11, CHAPTER 54, "WATER QUALITY STANDARDS" AND TITLE 11, CHAPTER 55, "WATER POLLUTION CONTROL", AS WELL AS CHAPTER 14 OF THE REVISED ORDINANCES OF HONOLULU, AS AMENDED. BEST MANAGEMENT PRACTICES SHALL BE EMPLOYED AT ALL TIMES DURING CONSTRUCTION.
19. THE PERMITTEE SHALL MAINTAIN, TO THE SATISFACTION OF THE DEPARTMENT OF PUBLIC WORKS, THE AREA WORKED WITHIN THE GOVERNMENT RIGHT-OF-WAY INCLUDING ANY REPAIRS TO PAVEMENT AND SHOULDER DAMAGED AS A RESULT OF THE INSTALLATION WORK, FOR A PERIOD OF ONE (1) YEAR FROM THE DATE OF FINAL INSPECTION. THE PERMITTEE SHALL UNDERTAKE REPAIRS EXPEDITIOUSLY, WHENEVER DIRECTED BY THE DEPARTMENT OF PUBLIC WORKS DURING THE MAINTENANCE PERIOD.
20. PURSUANT TO CHAPTER 6E, HRS, IN THE EVENT ANY ARTIFACTS OR HUMAN REMAINS ARE UNCOVERED DURING CONSTRUCTION OPERATIONS, THE CONTRACTOR SHALL IMMEDIATELY SUSPEND WORK IN THE AREA AND NOTIFY THE ENGINEER, THE COUNTY OF HAWAII POLICE DEPARTMENT, THE STATE DEPARTMENT OF LAND AND NATURAL RESOURCES HISTORIC PRESERVATION DIVISION (692-8015) AND THE DEPARTMENT OF PUBLIC WORKS (808-961-8321).
21. NO CONTRACTOR SHALL PERFORM ANY CONSTRUCTION OPERATION AS TO CAUSE FALLING ROCKS, SOIL OR DEBRIS IN ANY FORM TO FALL, SLIDE OR FLOW INTO EXISTING DRAINAGE SYSTEMS, OR ADJOINING PROPERTIES, STREETS OR NATURAL WATERCOURSES. SHOULD SUCH VIOLATIONS OCCUR, THE CONTRACTOR MAY BE CITED AND THE CONTRACTOR SHALL IMMEDIATELY MAKE ALL REMEDIAL ACTIONS NECESSARY AT HIS OWN COST.
22. THE CONTRACTOR SHALL SUBMIT A NOISE POLLUTION CONTROL PLAN WHEN APPLYING FOR A CONSTRUCTION PERMIT.
23. THE CONTRACTOR SHALL PROVIDE, INSTALL, AND MAINTAIN ALL NECESSARY SIGNS, LIGHTS, FLARES, BARRIERS, BARRICADES, MARKERS, CONES, AND OTHER PROTECTIVE FACILITIES, AND SHALL TAKE ALL NECESSARY PRECAUTIONS FOR THE PROTECTION, CONVENIENCE, AND SAFETY OF THE TRAVELING PUBLIC. ALL SUCH PROTECTIVE FACILITIES AND PRECAUTIONS SHALL CONFORM WITH THE "ADMINISTRATIVE RULES OF HAWAII GOVERNING THE USE OF TRAFFIC CONTROL DEVICES AT WORK SITES ON, OR ADJACENT TO PUBLIC STREETS AND HIGHWAYS," ADOPTED BY THE DIRECTOR OF TRANSPORTATION, AND THE CURRENT U.S. FEDERAL HIGHWAYS ADMINISTRATION "MANUAL ON UNIFORM TRAFFIC CONTROL DEVICES FOR STREETS AND HIGHWAYS, PART VI – STANDARDS AND GUIDES FOR TRAFFIC CONTROLS FOR STREETS AND HIGHWAY CONSTRUCTION, MAINTENANCE, UTILITY AND INCIDENT MANAGEMENT OPERATIONS."

    IF LANE CLOSURES ARE REQUIRED DURING CONSTRUCTION, A TRAFFIC CONTROL PLAN SHALL BE INCORPORATED INTO THE CONSTRUCTION PLANS AND MUST BE APPROVED BY THE DIVISION PRIOR TO THE ISSUANCE OF THE PERMIT.
24. NO MATERIAL AND/OR EQUIPMENT SHALL BE STOCKPILED OR OTHERWISE STORED WITHIN THE HIGHWAY RIGHT-OF-WAY, EXCEPT AT LOCATIONS DESIGNATED IN WRITING AND APPROVED BY THE ENGINEER.
25. ALL REGULATORY, GUIDE, AND CONSTRUCTION SIGNS AND BARRICADES SHALL BE OF HIGH-INTENSITY REFLECTIVE SHEETING.
26. UNPROTECTED PAVEMENT DROP OFFS GREATER THAN 2" WITHIN 8 FEET OF THE TRAVEL WAY SHALL NOT BE ALLOWED DURING NON-WORKING HOURS, EXCEPT WHERE APPROVED BY THE ENGINEER IN WRITING.
27. FREE FLOW OF TRAFFIC SHALL BE MAINTAINED IN BOTH DIRECTIONS AT ALL TIMES. TEMPORARY STOPPAGES REQUIRE ADVANCE APPROVAL IN WRITING FROM THE ENGINEER AND A "NOTICE TO MOTORISTS" MAY BE REQUIRED. SUBMIT THE NOTICE TO THE ENGINEER FOR REVIEW AND ACCEPTANCE A MINIMUM OF 6 WEEKS PRIOR TO PUBLICATION.
28. CLEAR SHOULDER AREAS SHALL BE MAINTAINED FOR BICYCLISTS AND PEDESTRIAN TRAFFIC AT ALL TIMES. IF ON SHOULDER IS TO BE CLOSED, APPROPRIATE SIGNS SHALL BE POSTED DIRECTING BICYCLISTS AND PEDESTRIANS TO USE ALTERNATE SHOULDER AREAS.
29. NO WORK WITHIN THE COUNTY RIGHT-OF-WAY SHALL BE DONE ON SATURDAYS, SUNDAYS, AND HOLIDAYS ANYTIME WITHOUT PRIOR APPROVAL FROM THE DEPARTMENT OF PUBLIC WORKS. RIGHT-OF-WAY WORK ON NORMAL WORKING DAYS SHALL BE LIMITED BETWEEN THE HOURS OF 7:00 AM TO 3:30 PM.

TABLE I FOR TRAFFIC CONTROL PLAN

POSTED SPEED LIMIT ① (M.P.H.)	SIGN SPACING (L) (FEET)	TAPER LENGTH (T) (FEET)		LONGITUDINAL BUFFER SPACE (B) (FEET)	SPACING OF CONES OR DELINEATORS (FEET) ③		
		W=12' OR LESS ②	W=GREATER THAN 12' ②		TAPER	TANGENT	WORK AREA
20	250	200	W X 17	35	20	20	10
25	250	200	W X 17	55	25	30	10
30	250	250	W X 20	85	30	30	10
35	250	250	W X 20	120	35	35	10
40	500	350	W X 30	170	40	40	10
45	500	550	W X 45	220	45	45	10
50	1000	600	W X 50	280	50	50	10
55	1000	700	W X 55	335	55	55	10

① USE ADVISORY SPEEDS WHEN POSTED.
② W=WIDTH OF LANE OR OFFSET.

1 / C-1 TYPICAL TRAFFIC CONTROL PLAN – TABLE 1

NOT TO SCALE

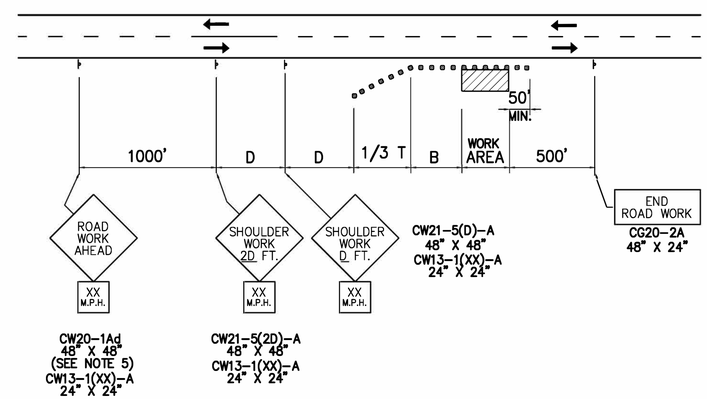

LEGEND

- CONE OR DELINEATOR
- DIRECTION OF TRAFFIC
- SIGN

NOTES:

1. THIS PLAN MAY BE USED ONLY IF ALL ROAD WORK, INCLUDING EQUIPMENT AND WORKERS ARE OFF THE TRAVEL WAY.
2. SEE TABLE 1 FOR ADDITIONAL DIMENSIONS.
3. ENGINEER WILL DETERMINE IF ADVISORY SPEED SIGN IS NECESSARY.
4. CONTRACTOR WILL PROVIDE NECESSARY ADJUSTMENTS TO ACCOMMODATE BICYCLISTS AND PEDESTRIANS.
5. CW20-1AD SIGN REQUIRED FOR POSTED SPEED LIMIT OF 45 MPH OR GREATER.
6. SIGNING IS REQUIRED IF THE WORK AREA INCLUDING EQUIPMENT AND WORKERS, IS OUTSIDE THE CLEAR ZONE DISTANCE, AS SPECIFIED IN THE LATEST AASHTO ROADSIDE DESIGN GUIDE.

2 / C-1 TYPICAL TRAFFIC CONTROL PLAN – WORKING ON SHOULDER OR ROADSIDE

NOT TO SCALE

Okahara and Associates Inc.
CONSULTING ENGINEERS

HILO: 200 KOHOLA STREET
HILO, HAWAII 96720
PH: (808) 961-5527
FAX: (808) 961-5529

HONOLULU: 677 ALA MOANA BLVD., SUITE 703
HONOLULU, HAWAII 96813
PH: (808) 524-1224
FAX: (808) 521-3151

LEANNE OKANO-KENDRICK Licensed Professional Engineer No.11108-C HAWAII, U.S.A.

This work was prepared by me or under my supervision and construction to this project will be under my observation

Expiration Date of License 4/30/20

Revisions

No.	Date	Description

Project

HALE KULA DRIVEWAY RIGHT-OF-WAY PAVING

TMKs: (3) 1 -7 -007 : 042 and 044
HALE KUA ROAD
OLA'A HOMESTEAD RESERVATION LOTS, PUNA, HAWAII

Sheet Title

NOTES AND TRAFFIC CONTROL PLAN

Project Director: LG
Project No.: 219-064
Drawn By: LG
Checked By: LOK
CAD File Name:
Scale:
Date: OCTOBER 2019
Const. Issue Date:

C-1

2 of 3 Sheets

D:\OPRCA\2019\219-064_HALE_KULA_DRIVEWAY\CADD\SHEETS\NOTES.DWG

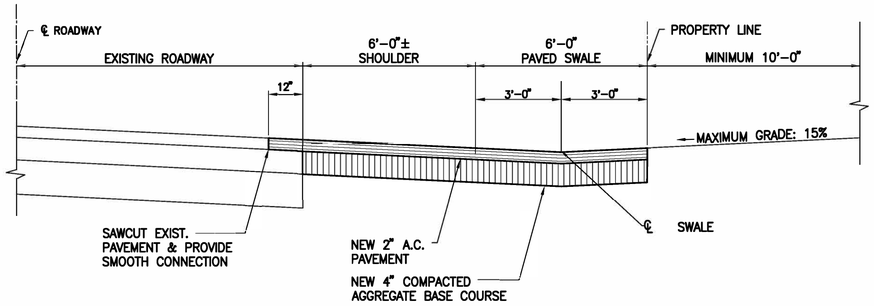

1 / C-2 SECTION AT DRIVEWAY
NOT TO SCALE

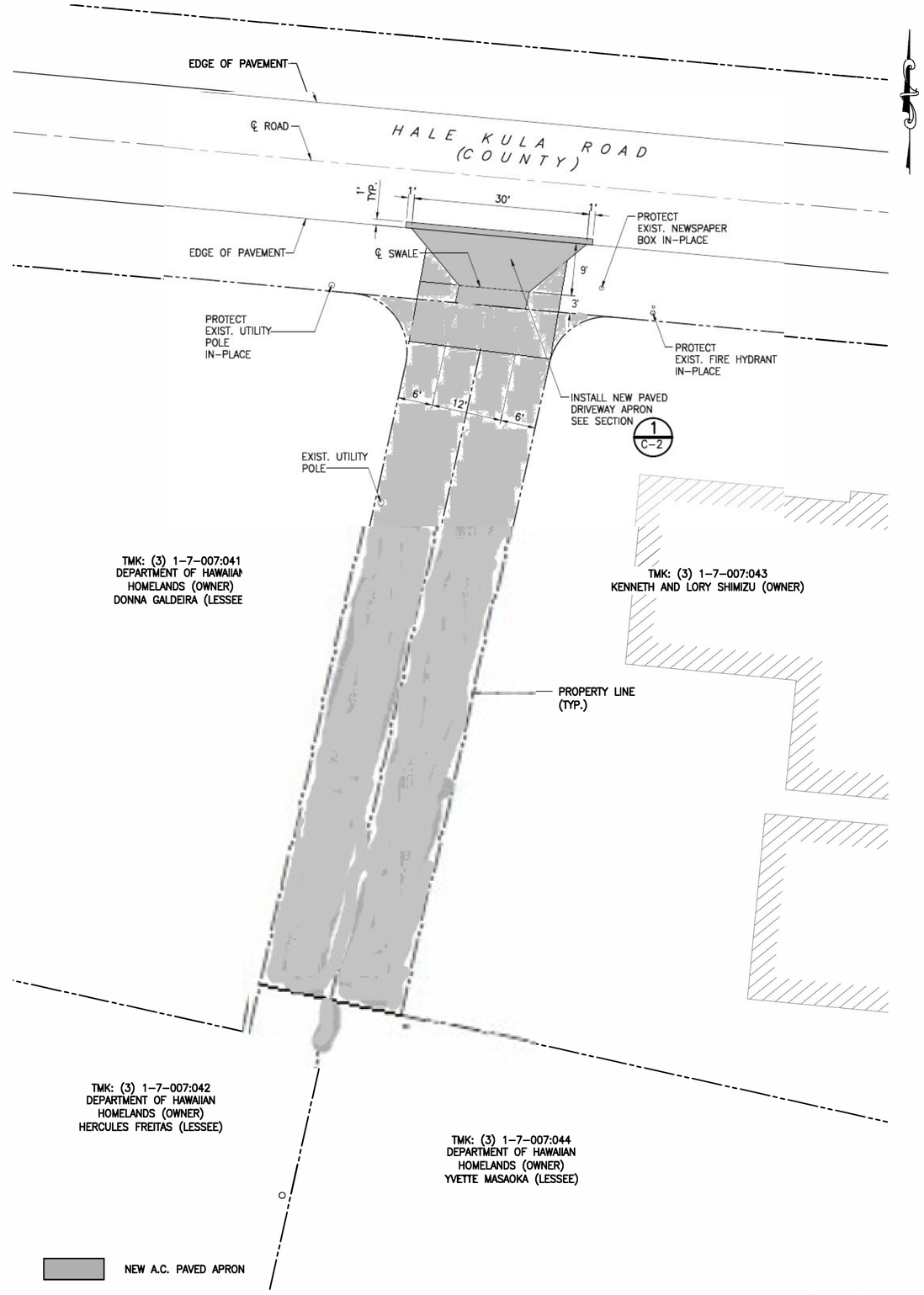

SITE PLAN
SCALE: 1"=10'

DIRECTOR, DEPARTMENT OF PUBLIC WORKS
COUNTY OF HAWAII
(FOR WORK WITHIN THE COUNTY RIGHT-OF-WAY)

DATE

Okahara and Associates Inc.
CONSULTING ENGINEERS

HILO: 200 KOHOLA STREET
HILO, HAWAII 96720
PH: (808) 961-5527
FAX: (808) 961-5529

HONOLULU: 677 ALA MOANA BLVD., SUITE 703
HONOLULU, HAWAII 96813
PH: (808) 524-1224
FAX: (808) 521-3151

LENNIE OKANO-KENDRICK
Licensed Professional Engineer
No.11108-C
HAWAII, U.S.A.

This work was prepared by me or under my supervision and construction to this project will be under my observation

Expiration Date of License 4/30/20

Revisions

No.	Date	Description
△		
△		
△		
△		
△		
△		
△		
△		
△		
△		
△		
△		
△		

Project

HALE KULA DRIVEWAY RIGHT-OF-WAY PAVING

TMKs: (3) 1-7-007 : 042 and 044
HALE KUA ROAD
OLA'A HOMESTEAD RESERVATION LOTS,
PUNA, HAWAI'I

Sheet Title

SITE PLAN AND DRIVEWAY SECTION

Project Director	Project No. 219-064
LG Drawn By	LOK Checked By
CAD File Name:	
Scale:	
OCTOBER 2019 Date	C-2
Const. Issue Date	3 of 3 Sheets

D:\OPROJ\2019\219-064_HALE_KULA_DRIVEWAY\CADD\SHEETS\C-1.DWG