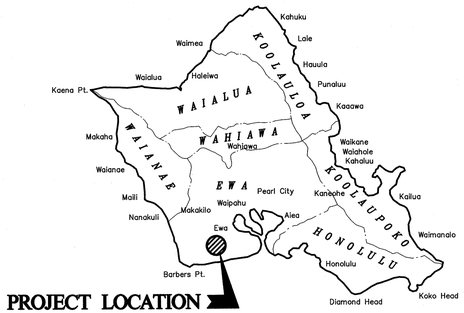

VICINITY MAP

4 0 4 8
SCALE IN MILES

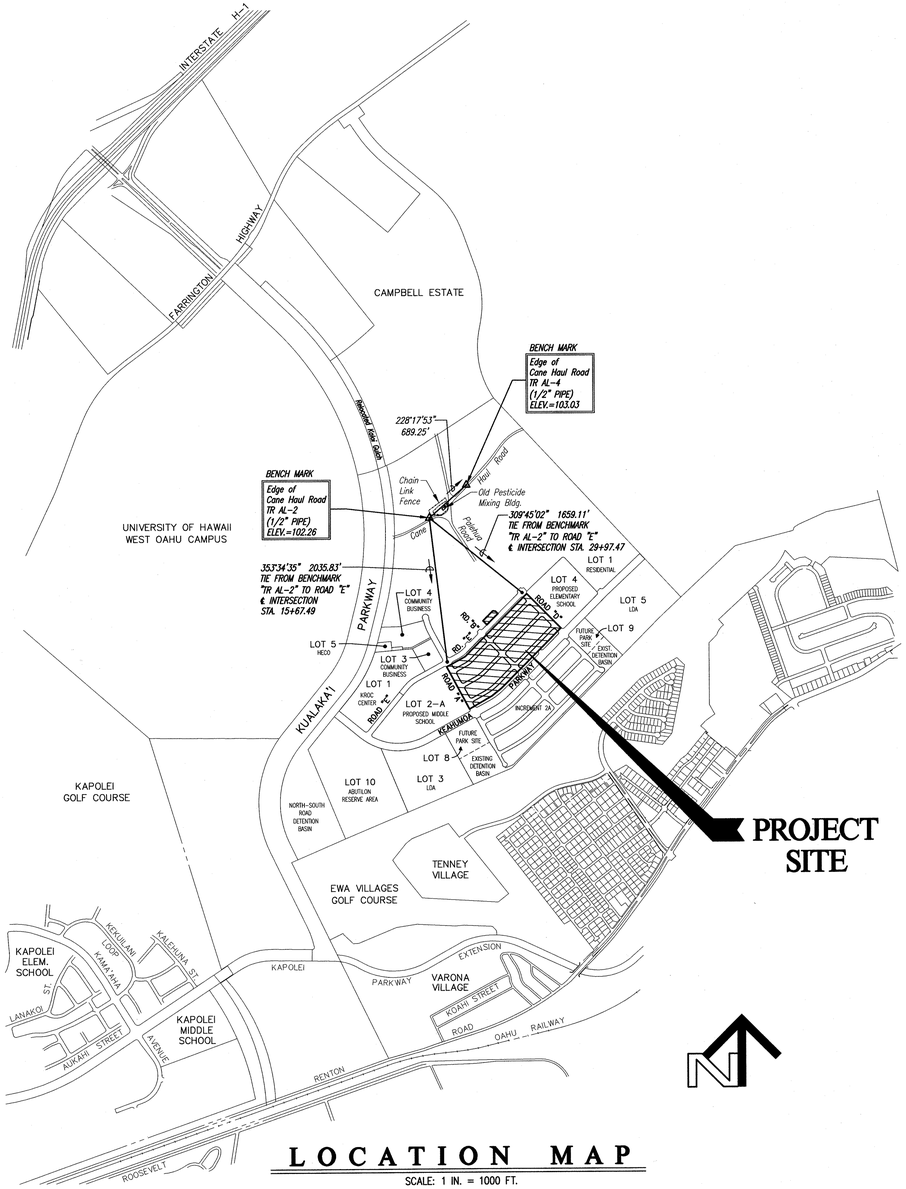

LOCATION MAP

SCALE: 1 IN. = 1000 FT.

CONSTRUCTION PLANS
FOR

EAST KAPOLEI II DEVELOPMENT INCREMENT 2B

HONOULIULI, EWA, OAHU, HAWAII

(DPP SUBD. FILE NO. 2011/SUB-155)

OWNER & DEVELOPER: DEPARTMENT OF HAWAIIAN HOME LANDS
TAX MAP KEY: 9-1-17: Portion 110

Community Planning and Engineering, Inc.
Engineering Design | Construction Management | Infrastructure Planning
1286 Queen Emma Street Honolulu, Hawaii

INDEX TO DRAWINGS

SHT. NO.	DWG. NO.	DESCRIPTION
1	T-1	TITLE SHEET
2	C-1	LOT GRADING NOTES, GENERAL SITE PLAN AND BORING LOCATIONS
3	C-2	LOT GRADING PLAN – PHASE 1
4	C-3	LOT GRADING PLAN – PHASE 2
5	C-4	EROSION CONTROL PLAN
6-8	C-5 THRU C-7	GENERAL NOTES
9-10	C-8 AND C-9	GENERAL LAYOUT PLAN
11	C-10	TYPICAL ROADWAY SECTIONS
12	C-11	PLAN AND PROFILE – ROAD "A"
13	C-12	PLAN AND PROFILE – ROAD "B"
14	C-13	PLAN AND PROFILE – ROAD "D"
15-16	C-14 AND C-15	PLAN AND PROFILE – ROAD "D-1"
17-18	C-16 AND C-17	PLAN AND PROFILE – ROAD "D-2"
19-20	C-18 AND C-19	PLAN AND PROFILE – ROAD "D-3"
21	C-20	MAIL BOX CENTER LAYOUT PLAN
22	C-21	MAIL BOX CENTER SIGN AND STRIPING PLAN
23	C-22	CURB RETURNS
24	C-23	TYPICAL CURB RAMP DETAILS
25-29	C-24 THRU C-28	CURB RAMP DETAILS
30-31	C-29 AND C-30	TRAFFIC SIGNS AND PAVEMENT MARKING PLAN
32	C-31	TRAFFIC SIGNS AND PAVEMENT MARKING DETAILS
33	C-32	FIRE HYDRANT PROFILES
34-40	S-1 THRU S-7	STRUCTURAL SHEETS
41-66	E-1 THRU E-26	ELECTRICAL PLANS
67-78	L-0 THRU L-11	STREET TREE AND DETAILS

APPROVED

CHAIRMAN, HAWAIIAN HOMES COMMISSION
DEPARTMENT OF HAWAIIAN HOME LANDS
STATE OF HAWAII — DATE 6/17/13

for DIRECTOR, DEPARTMENT OF PLANNING AND PERMITTING
CITY & COUNTY OF HONOLULU — DATE 7/16/2013

for MANAGER AND CHIEF ENGINEER, BOARD OF WATER SUPPLY
CITY & COUNTY OF HONOLULU
(FOR WORK AFFECTING BWS FACILITIES IN CITY/STATE RIGHT-OF-WAY AND BWS EASEMENTS ONLY) — DATE 3-20-2013

[illegible]
CITY & COUNTY OF HONOLULU — DATE

for CHIEF, ENVIRONMENTAL MANAGEMENT DIVISION
DEPARTMENT OF HEALTH, STATE OF HAWAII — DATE 5-15-13

2012/CP-72

DHHL – EAST KAPOLEI II DEVELOPMENT – INCREMENT 2B (DPP SUBD. FILE NO. 2011/SUB-155)

J:\Land Projects\DHHL East Kapolei II\Increment II-B\Construction Drawings\Government Review #3\TITLE SHEET GR#3.dwg, 1 TITLE SHEET, 3/13/2013 11:12:28 AM, 1:1

FILE	POCKET	FOLDER	NO.

GRADING NOTES

1. ALL GRADING WORK SHALL BE IN ACCORDANCE WITH CHAPTER 14, ARTICLES 13, 14, 15 AND 16, AS RELATED TO GRADING, SOIL EROSION AND SEDIMENT CONTROL, OF THE REVISED ORDINANCES OF HONOLULU, 1990, AS AMENDED, AND SOILS REPORT ENTITLED "REVISED PRELIMINARY GEOTECHNICAL EXPLORATION REPORT PROPOSED EAST KAPOLEI PHASE II DEVELOPMENT STUDY AREA I, KAPOLEI, OAHU, HAWAII" DATED JUNE 2009, SOILS REPORT ENTITLED, "REVISED PRELIMINARY GEOTECHNICAL EXPLORATION REPORT PROPOSED EAST KAPOLEI PHASE II DEVELOPMENT STUDY AREA II, KAPOLEI, OAHU, HAWAII" DATED JUNE 2009, SUPPLEMENTAL RECOMMENDATIONS LETTER DATED SEPTEMBER 12, 2012 AND PAVEMENT SECTION LETTER DATED MARCH 22, 2012, BY PSC CONSULTANTS, LLC.

2. NO CONTRACTOR SHALL PERFORM ANY GRADING OPERATION SO AS TO CAUSE FALLING ROCKS, SOIL, OR DEBRIS IN ANY FORM TO FALL, SLIDE OR FLOW ONTO ADJOINING PROPERTIES, STREETS OR NATURAL WATERCOURSES. SHOULD SUCH VIOLATIONS OCCUR, THE CONTRACTOR MAY BE CITED AND THE CONTRACTOR SHALL MAKE ALL REMEDIAL ACTIONS NECESSARY.

3. THE CONTRACTOR, AT HIS OWN EXPENSE, SHALL KEEP THE PROJECT AREA AND SURROUNDING AREA FREE FROM DUST NUISANCE. THE WORK SHALL BE IN CONFORMANCE WITH THE AIR POLLUTION CONTROL STANDARDS CONTAINED IN THE HAWAII ADMINISTRATIVE RULES, TITLE 11, CHAPTER 60.1, "AIR POLLUTION CONTROL".

4. THE UNDERGROUND PIPES, CABLES OR DUCTLINES KNOWN TO EXIST BY THE ENGINEER FROM HIS SEARCH OF RECORDS ARE INDICATED ON THE PLANS. THE CONTRACTOR SHALL VERIFY THE LOCATIONS AND DEPTHS OF THE FACILITIES AND EXERCISE PROPER CARE IN EXCAVATING IN THE AREA WHEREVER CONNECTIONS OF NEW UTILITIES ARE SHOWN ON THE PLANS, THE CONTRACTOR SHALL EXPOSE THE EXISTING LINES AT THE PROPOSED CONNECTIONS TO VERIFY THEIR LOCATIONS AND DEPTHS PRIOR TO EXCAVATION FOR THE NEW LINES.

5. ADEQUATE PROVISIONS SHALL BE MADE TO PREVENT SURFACE WATERS FROM DAMAGING THE CUT FACE OF AN EXCAVATION OR THE SLOPED SURFACES OF A FILL. FURTHERMORE, ADEQUATE PROVISIONS SHALL BE MADE TO PREVENT SEDIMENT-LADEN RUNOFF FROM LEAVING THE SITE.

6. ALL SLOPES AND EXPOSED AREAS SHALL BE CHEMICALLY STABILIZED AS SOON AS FINAL GRADES HAVE BEEN ESTABLISHED. CHEMICAL STABILIZATION SHALL NOT BE DELAYED UNTIL ALL GRADING WORK HAS BEEN COMPLETED. GRADING TO FINAL GRADE SHALL BE CONTINUOUS, AND ANY AREA WITHIN WHICH WORK HAS BEEN INTERRUPTED OR DELAYED SHALL BE CHEMICALLY STABILIZED.

7. FILLS ON SLOPES STEEPER THAN 5:1 SHALL BE KEYED.

8. THE CITY SHALL BE INFORMED OF THE LOCATION OF THE BORROW/DISPOSAL SITE FOR THE PROJECT WHEN THE APPLICATION FOR A GRADING PERMIT IS MADE. THE BORROW/DISPOSAL SITE MUST ALSO FULFILL THE REQUIREMENTS OF THE GRADING ORDINANCE.

9. NO GRADING WORK SHALL BE DONE ON SATURDAYS, SUNDAYS AND HOLIDAYS AT ANY TIME WITHOUT PRIOR NOTICE TO THE DIRECTOR, D.P.P., PROVIDED SUCH GRADING WORK IS ALSO IN CONFORMANCE WITH THE COMMUNITY NOISE CONTROL STANDARDS CONTAINED IN THE HAWAII ADMINISTRATIVE RULES, TITLE 11, CHAPTER 46, "COMMUNITY NOISE CONTROLS".

10. THE LIMITS OF THE AREA TO BE GRADED SHALL BE FLAGGED BEFORE THE COMMENCEMENT OF THE GRADING WORK.

11. ALL GRADING OPERATIONS SHALL BE PERFORMED IN CONFORMANCE WITH THE APPLICABLE PROVISIONS OF THE WATER QUALITY AND WATER POLLUTION CONTROL STANDARDS CONTAINED IN HAWAII ADMINISTRATIVE RULES, TITLE 11, CHAPTER 54, "WATER QUALITY STANDARDS", AND TITLE 11, CHAPTER 55, "WATER POLLUTION CONTROL," AND IF APPLICABLE, THE NPDES PERMIT FOR THE PROJECT. BEST MANAGEMENT PRACTICES SHALL BE EMPLOYED AT ALL TIMES DURING THE CONSTRUCTION PERIOD.

12. WHERE APPLICABLE AND FEASIBLE THE MEASURES TO CONTROL EROSION AND OTHER POLLUTANTS SHALL BE IN PLACE BEFORE ANY EARTH MOVING PHASE OF THE GRADING IS INITIATED.

13. TEMPORARY EROSION CONTROLS SHALL NOT BE REMOVED BEFORE PERMANENT EROSION CONTROLS ARE IN-PLACE AND ESTABLISHED.

14. TEMPORARY EROSION CONTROL PROCEDURES SHALL BE SUBMITTED FOR APPROVAL PRIOR TO APPLICATION FOR A GRADING PERMIT.

15. IF THE GRADING WORK INVOLVES CONTAMINATED SOIL, THEN ALL GRADING WORK SHALL BE DONE IN CONFORMANCE WITH APPLICABLE STATE AND FEDERAL REQUIREMENTS.

16. FOR NON-CITY PROJECTS, THE CONTRACTOR SHALL NOTIFY THE CIVIL ENGINEERING BRANCH, D.P.P. AT 768-8084 TO ARRANGE FOR INSPECTIONAL SERVICES AND SUBMIT TWO (2) SETS OF APPROVED CONSTRUCTION PLANS SEVEN (7) DAYS PRIOR TO COMMENCEMENT OF CONSTRUCTION WORK. FOR CITY PROJECTS, THE CONTRACTOR SHALL COORDINATE INSPECTIONAL SERVICES WITH THE RESPONSIBLE CITY AGENCY.

17. PURSUANT TO CHAPTER 6E, HRS, IN THE EVENT ANY ARTIFACTS OR HUMAN REMAINS ARE UNCOVERED DURING CONSTRUCTION OPERATIONS, THE CONTRACTOR SHALL IMMEDIATELY SUSPEND WORK AND NOTIFY THE HONOLULU POLICE DEPARTMENT, THE STATE DEPARTMENT OF LAND AND NATURAL RESOURCES-HISTORIC PRESERVATION DIVISION (692-8015). IN ADDITION, FOR NON-CITY PROJECTS, THE CONTRACTOR SHALL INFORM THE CIVIL ENGINEERING BRANCH, D.P.P. (768-8084); AND FOR CITY PROJECTS, NOTIFY THE RESPONSIBLE CITY AGENCY.

18. FOR ALL PROJECTS, WHICH WILL DISTURB ONE (1) ACRE OR MORE OF LAND, THE CONTRACTOR SHALL NOT START CONSTRUCTION UNTIL A NOTICE OF GENERAL PERMIT COVERAGE (NGPC) IS RECEIVED FROM THE DEPARTMENT OF HEALTH, STATE OF HAWAII, AND HAS SATISFIED ANY OTHER APPLICABLE REQUIREMENTS OF THE NPDES PERMIT PROGRAM. ALSO, FOR NON-CITY AND OTHER NON-GOVERNMENTAL AGENCY PROJECTS, THE CONTRACTOR SHALL PROVIDE A WRITTEN COPY OF THE NGPC TO THE PERMITTING AND INSPECTION SECTION, CIVIL ENGINEERING BRANCH, DPP, AT LEAST SEVEN (7) CALENDAR DAYS BEFORE THE START OF THE CONTRUCTION. FOR CITY OR OTHER GOVERNMENTAL PROJECTS, THE CONTRACTOR SHOULD PROVIDE A WRITTEN COPY OF THE NGPC TO THE APPROPRIATE CITY DEPARTMENT OR GOVERNMENTAL AGENCY PER THEIR REQUIREMENTS.

19. ALL GRADING AND CONSTRUCTION WORK SHALL IMPLEMENT MEASURES TO ENSURE THAT THE DISCHARGE OF POLLUTANTS FROM THE CONSTRUCTION SITE WILL BE REDUCED TO THE MAXIMUM EXTENT PRACTICABLE AND WILL NOT CAUSE OR CONTRIBUTE TO AN EXCEEDANCE OF WATER QUALITY STANDARDS.

20. NON-COMPLIANCE TO ANY OF THE ABOVE REQUIREMENTS SHALL MEAN IMMEDIATE SUSPENSION OF ALL WORK, AND REMEDIAL WORK SHALL COMMENCE IMMEDIATELY. ALL COSTS INCURRED SHALL BE BILLED TO THE VIOLATOR. FURTHERMORE, VIOLATORS SHALL BE SUBJECTED TO ADMINISTRATIVE, CIVIL AND/OR CRIMINAL PENALTIES.

21. FOR BENCH MARK, SEE SHEET T-1.

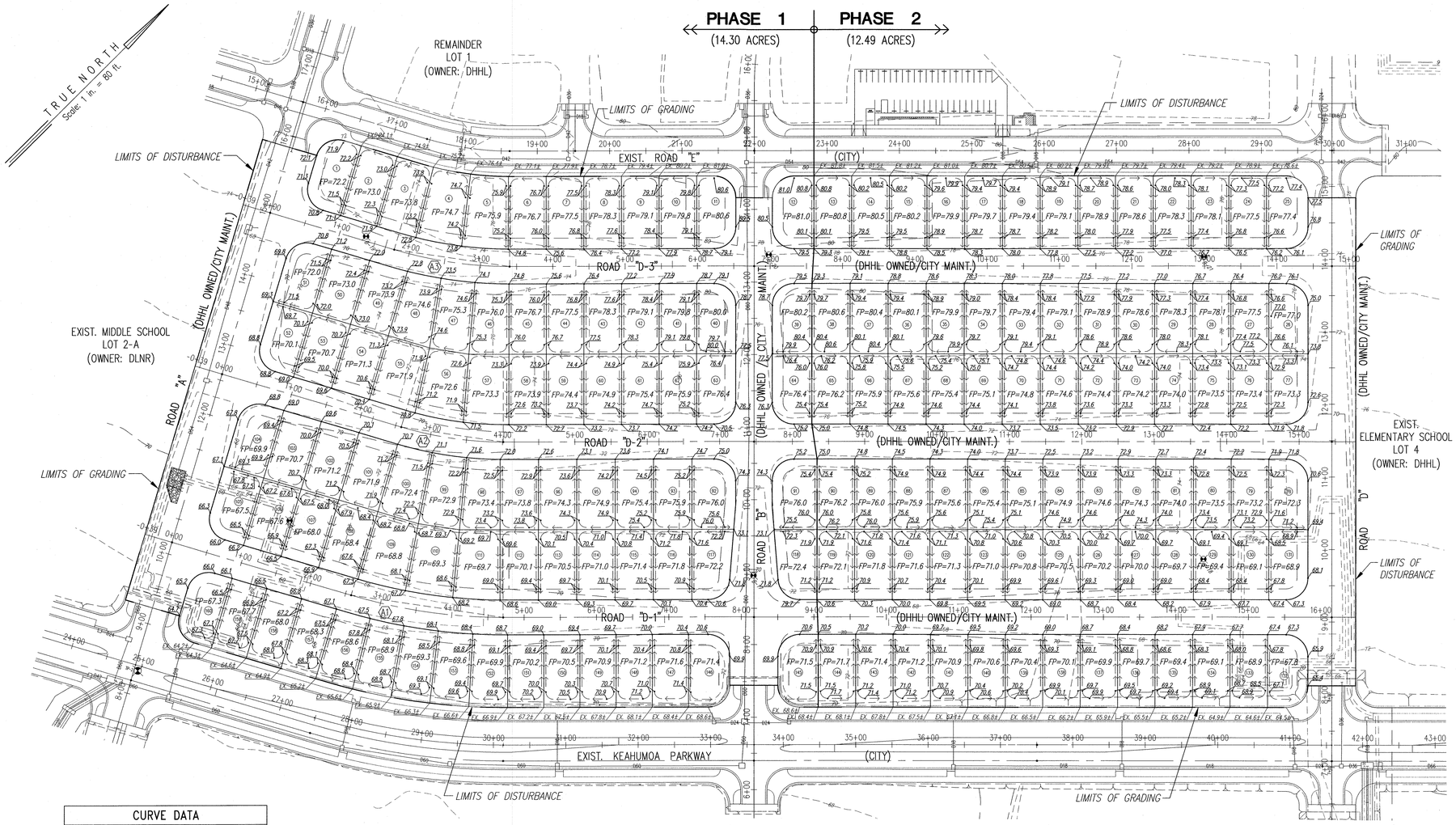

CURVE DATA			
CURVE	(A1)	(A2)	(A3)
△	16°35'00"	16°35'00"	16°35'00"
△/2	8°17'30"	8°17'30"	8°17'30"
R	736.00	494.00	559.00
T	107.26	71.99	81.47
C	212.28	142.48	161.23
Lc	213.02	142.98	161.79

GENERAL SITE PLAN AND BORING LOCATIONS

SCALE: 1" = 80'

EARTHWORK QUANTITIES
(FOR PERMIT PURPOSES ONLY)

AREA TO BE GRADED	26.79 ACS.
AREA OF DISTURBANCE PER DOH DEFINITION	26.79 ACS.
EXCAVATION (NON EXPANSIVE MATERIAL)	5,500 CY
EMBANKMENT (NON EXPANSIVE MATERIAL)	16,500 CY
GENERAL FILL MATERIAL	11,500 CY
TOTAL FILL MATERIAL	28,000 CY

LEGEND

- 72 — EXISTING CONTOUR
- PROPERTY LINE / ROAD RIGHT-OF-WAY
- LIMITS OF DISTURBANCE PER DOH DEFINITION
- CENTERLINE OF ROADWAY
- LIMITS OF GRADING
- SET BACK LINE
- FINISH GRADE SWALE PATTERN
- FP — FINISHED PAD
- (40) — LOT NUMBER
- 53.7 — FINISH SPOT ELEVATION
- B-6 — BORING LOCATION

80 40 0 80 160
Graphic Scale in Feet

ANSON M. MURAYAMA
LICENSED PROFESSIONAL ENGINEER
No. 6975-C
HAWAII, U.S.A.

THIS WORK WAS PREPARED BY ME OR UNDER MY SUPERVISION. CONSTRUCTION OF THIS PROJECT WILL BE UNDER MY OBSERVATION. LICENSE EXPIRATION DATE: 04/30/14

REVISION DATE	DESCRIPTION	MADE BY	APPROVED

cp&e Community Planning and Engineering, Inc.
Engineering Design | Construction Management | Infrastructure Planning
1286 Queen Emma Street Honolulu, Hawaii

EAST KAPOLEI II DEVELOPMENT INCREMENT 2B
HONOULIULI, EWA, OAHU, HAWAII
(DPP SUBD. FILE NO. 2011/SUB-155)
OWNER & DEVELOPER: DEPARTMENT OF HAWAIIAN HOME LANDS
TAX MAP KEY: 9-1-17: Portion 110

LOT GRADING NOTES, GENERAL SITE PLAN AND BORING LOCATIONS

DRAWN BY: LYLT	ENGINEER: FC	CHECKED BY: AMM

APPROVED:

M. [signature] 6/28/13
CHIEF, CIVIL ENGINEERING BRANCH, DPP DATE

DWG. NO. C-1

SHEET 2 OF 78 SHEETS

FILE	POCKET	FOLDER	NO.

P:\Land Projects\DHHL East Kapolei II\Increment II-B\Construction Drawings\Government Review #3\LOT GRADING NOTES, GEN. SITE PLAN & BORINGS GR#3.dwg, 2 LOT GRADING NOTES GENERAL SITE PLAN & BORING LOCATIONS, 3/14/2013 10:35:46 AM, 1:1

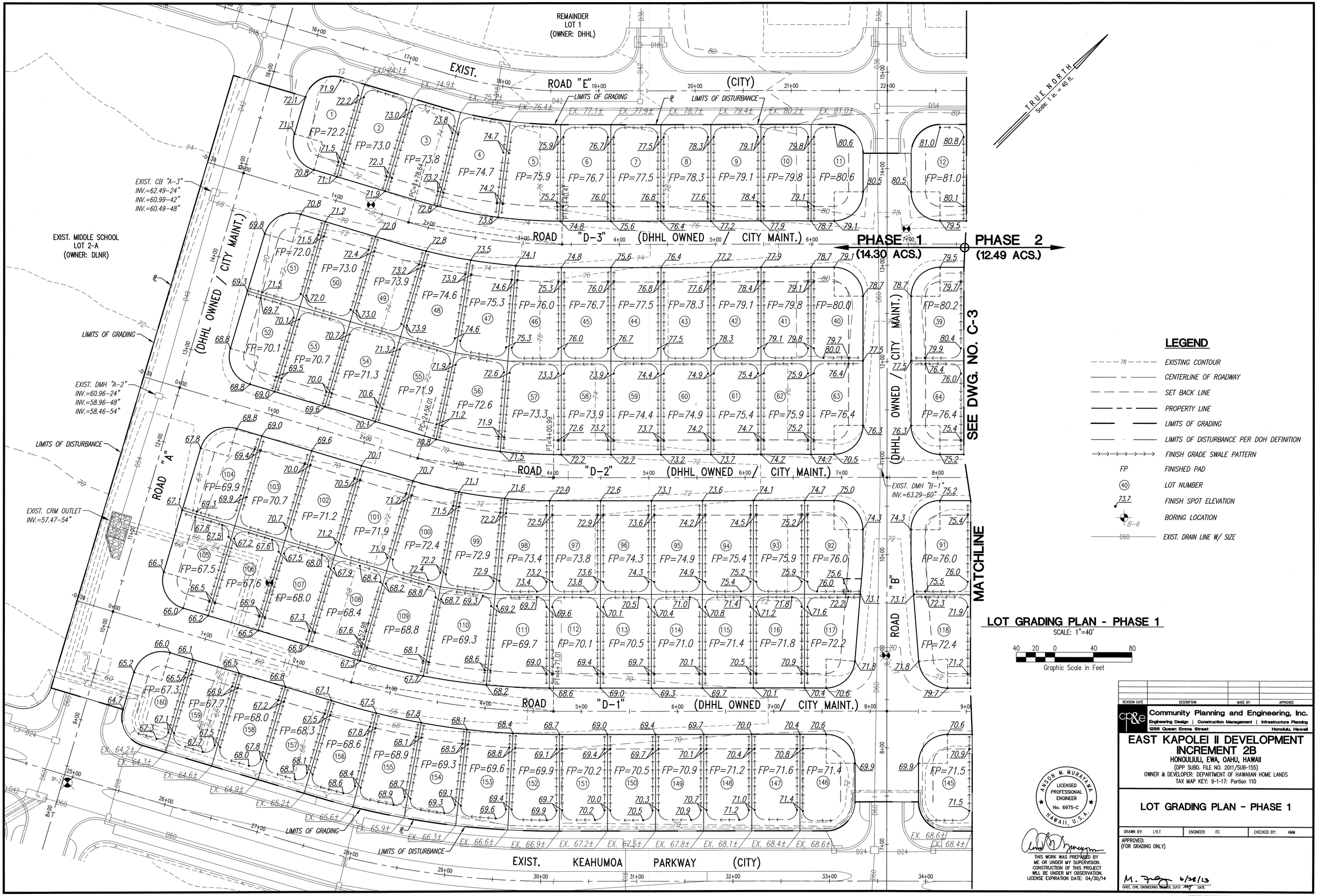

LEGEND

- EXISTING CONTOUR
- CENTERLINE OF ROADWAY
- SET BACK LINE
- PROPERTY LINE
- LIMITS OF GRADING
- LIMITS OF DISTURBANCE PER DOH DEFINITION
- FINISH GRADE SWALE PATTERN
- FP — FINISHED PAD
- (40) — LOT NUMBER
- 73.7 — FINISH SPOT ELEVATION
- B-6 — BORING LOCATION
- D60 — EXIST. DRAIN LINE W/ SIZE

LOT GRADING PLAN - PHASE 1

SCALE: 1"=40'

40 20 0 40 80

Graphic Scale in Feet

REVISION DATE	DESCRIPTION	MADE BY	APPROVED

cp&e Community Planning and Engineering, Inc.
Engineering Design | Construction Management | Infrastructure Planning
1286 Queen Emma Street Honolulu, Hawaii

EAST KAPOLEI II DEVELOPMENT INCREMENT 2B

HONOULIULI, EWA, OAHU, HAWAII
(DPP SUBD. FILE NO. 2011/SUB-155)
OWNER & DEVELOPER: DEPARTMENT OF HAWAIIAN HOME LANDS
TAX MAP KEY: 9-1-17: Portion 110

LOT GRADING PLAN - PHASE 1

DRAWN BY:	ENGINEER:	CHECKED BY:
LYLT	FC	AMM

APPROVED:
(FOR GRADING ONLY)

M. Fray 6/28/13
CHIEF, CIVIL ENGINEERING BRANCH, D.P.P. DATE

ANSON M. MURAYAMA
LICENSED PROFESSIONAL ENGINEER
No. 6975-C
HAWAII, U.S.A.

THIS WORK WAS PREPARED BY ME OR UNDER MY SUPERVISION. CONSTRUCTION OF THIS PROJECT WILL BE UNDER MY OBSERVATION, LICENSE EXPIRATION DATE: 04/30/14

DWG. NO. C-2

SHEET 3 OF 78 SHEETS

FILE	POCKET	FOLDER	NO.

P:\Land Projects\DHHL East Kapolei II\Increment II-B\Construction Drawings\Government Review #3\LOT GRADING PLAN - PHASE 1 GR#3.dwg, 3 LOT GRADING PLAN - PHASE 1, 3/14/2013 10:52:21 AM, 1:1

P:\Land Projects\DHHL East Kapolei II\Increment I-B\Construction Drawings\Government Review #3\LOT GRADING PLAN - PHASE 2 GR#3.dwg, 4 LOT GRADING PLAN - PHASE 2, 3/14/2013 11:05:16 AM, 1:1

EXIST. ROAD "E" (CITY)

LIMITS OF GRADING

LIMITS OF DISTURBANCE

PHASE 1 (14.30 ACS.)

PHASE 2 (12.49 ACS.)

SEE DWG. NO. C-2

MATCHLINE

ROAD "D-3" (DHHL OWNED / CITY MAINT.)

ROAD "D-2" (DHHL OWNED / CITY MAINT.)

ROAD "D-1" (DHHL OWNED / CITY MAINT.)

ROAD "D" (DHHL OWNED / CITY MAINT.)

EXIST. KEAHUMOA PARKWAY (CITY)

EXIST. ELEMENTARY SCHOOL LOT 4 (OWNER: DHHL)

TRUE NORTH
Scale: 1 in. = 40 ft.

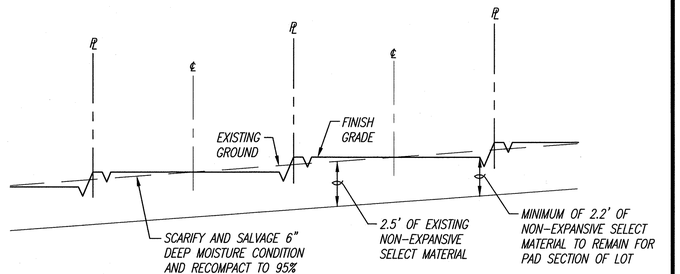

TYPICAL LOT SECTION
NOT TO SCALE

LEGEND

- 78 — EXISTING CONTOUR
- CENTERLINE OF ROADWAY
- SET BACK LINE
- PROPERTY LINE
- LIMITS OF GRADING
- LIMITS OF DISTURBANCE PER DOH DEFINITION
- FINISH GRADE SWALE PATTERN
- FP — FINISHED PAD
- (40) — LOT NUMBER
- 73.7 — FINISH SPOT ELEVATION
- B-6 — BORING LOCATION
- D60 — EXIST. DRAIN LINE W/ SIZE

LOT GRADING PLAN - PHASE 2
SCALE: 1"=40'

40 20 0 40 80
Graphic Scale in Feet

ANSON M. MURAYAMA
LICENSED PROFESSIONAL ENGINEER
No. 6975-C
HAWAII, U.S.A.

THIS WORK WAS PREPARED BY ME OR UNDER MY SUPERVISION. CONSTRUCTION OF THIS PROJECT WILL BE UNDER MY OBSERVATION. LICENSE EXPIRATION DATE: 04/30/14

REVISION DATE	DESCRIPTION	MADE BY	APPROVED

cp&e Community Planning and Engineering, Inc.
Engineering Design | Construction Management | Infrastructure Planning
1286 Queen Emma Street Honolulu, Hawaii

EAST KAPOLEI II DEVELOPMENT INCREMENT 2B

HONOULIULI, EWA, OAHU, HAWAII
(DPP SUBD. FILE NO. 2011/SUB-155)
OWNER & DEVELOPER: DEPARTMENT OF HAWAIIAN HOME LANDS
TAX MAP KEY: 9-1-17: Portion 110

LOT GRADING PLAN - PHASE 2

DRAWN BY: LYLT	ENGINEER: FC	CHECKED BY: AMM

APPROVED:
(FOR GRADING ONLY)

M. Fujo 6/28/13
CHIEF, CIVIL ENGINEERING BRANCH, D.P.P. DATE

DWG. NO. C-3

SHEET 4 OF 78 SHEETS

FILE	POCKET	FOLDER	NO.

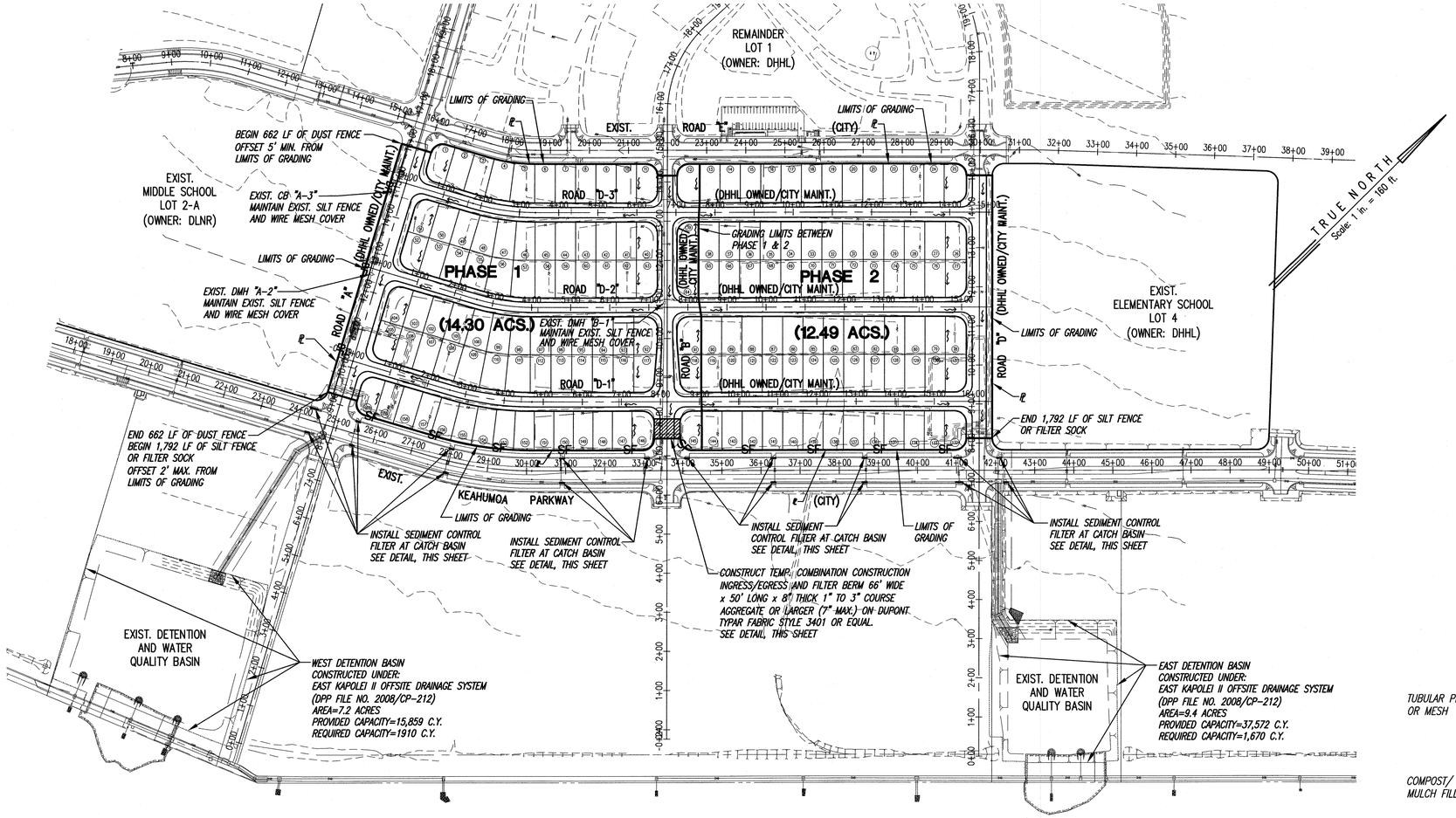

EROSION CONTROL PLAN

SCALE 1" = 160'

160 80 0 160 320

Graphic Scale in Feet

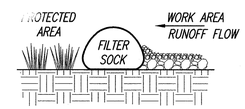

SECTION

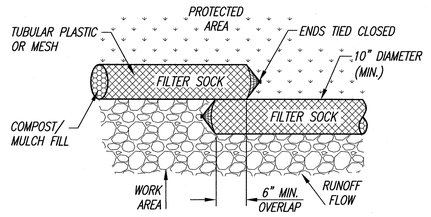

PLAN

DETAIL - FILTER SOCK

NOT TO SCALE

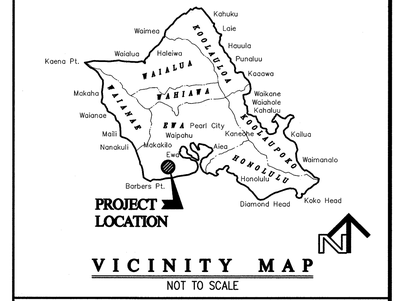

VICINITY MAP

NOT TO SCALE

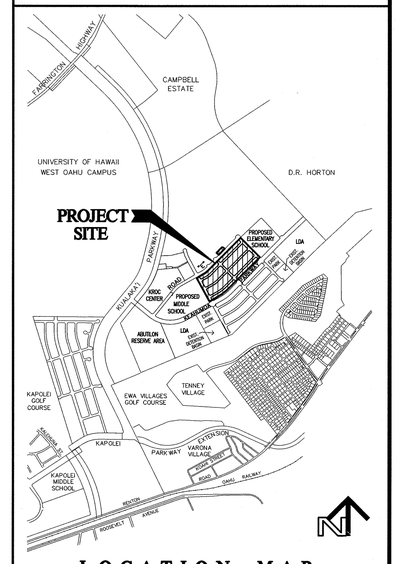

LOCATION MAP

NOT TO SCALE

PHASE	AREA TO BE GRADED
1	14.30 ACS.
2	12.49 ACS.

LEGEND

- EXISTING GRADE
- SURFACE WATER FLOW
- LIMITS OF GRADING
- DS — DUST FENCE
- SF — SILT FENCE
- INLET PROTECTION
- CONSTRUCTION EGRESS/INGRESS AND FILTER BERM

CONSTRUCTION BMPS

1. THE FOLLOWING SPECIAL CONDITIONS APPLY TO ALL LAND DISTURBANCE WORK CONDUCTED UNDER THE GENERAL PERMIT:
   - A. CONSTRUCTION MANAGEMENT TECHNIQUES INCLUDE:
     1. CLEARING AND GRUBBING SHALL BE HELD TO THE MINIMUM NECESSARY FOR GRADING AND EQUIPMENT OPERATION.
     2. EROSION AND SEDIMENT CONTROL MEASURES SHALL BE IN PLACE AND FUNCTIONAL BEFORE EARTH MOVING OPERATIONS BEGIN AND SHALL BE CONSTRUCTED AND MAINTAINED THROUGHOUT THE CONSTRUCTION PERIOD. TEMPORARY MEASURES MAY BE REMOVED AT THE BEGINNING OF THE WORK DAY, BUT SHALL BE REPLACED AT THE END OF THE WORK DAY.
     3. ALL CONTROL MEASURES SHALL BE CHECKED AND REPAIRED, AS NECESSARY, WEEKLY IN DRY PERIODS AND WITHIN 24-HOUR PERIOD. DURING PROLONGED RAINFALL, DAILY CHECKING IS NECESSARY. THE PERMITTEE SHALL MAINTAIN RECORDS OF CHECKS AND REPAIRS.
     4. A SPECIFIC INDIVIDUAL SHALL BE DESIGNATED TO BE RESPONSIBLE FOR EROSION AND SEDIMENT CONTROLS ON EACH PROJECT SITE.
   - B. VEGETATION CONTROLS INCLUDE:
     1. PRE-CONSTRUCTION VEGETATIVE GROUND COVER SHALL NOT BE DESTROYED, REMOVED OR DISTURBED MORE THAN 20 CALENDAR DAYS PRIOR TO SITE DISTURBANCE.
     2. TEMPORARY CHEMICAL STABILIZATION OF SOIL SHALL BE APPLIED ON AREAS THAT WILL REMAIN UNFINISHED FOR MORE THAN 30 CALENDAR DAYS.
     3. PERMANENT CHEMICAL STABILIZATION OF SOIL SHALL BE APPLIED AS SOON AS PRACTICABLE AFTER FINAL GRADING.
   - C. STRUCTURAL CONTROLS INCLUDE:
     1. ALL SURFACE WATER FLOWING TOWARD THE CONSTRUCTION AREA SHALL BE DIVERTED BY USING BERMS, CHANNELS, SEDIMENT TRAPS, AND OTHER APPROPRIATE CONTROL MEASURES, AS PRACTICAL.
     2. EROSION CONTROL MEASURES SHALL BE DESIGNED ACCORDING TO THE SIZE OF DISTURBED OR DRAINAGE AREAS, TO DETAIN RUNOFF AND TRAP SEDIMENT.
     3. WATER MUST BE DISCHARGED THROUGH A PIPE OR LINED CHANNEL SO THAT THE DISCHARGE DOES NOT CAUSE EROSION.
     4. STORM DRAIN INLET PROTECTION FOR NEW AND EXISTING DRAIN INLETS.
     5. CONTRACTOR SHALL PROVIDE AND MAINTAIN THE CONSTRUCTION ENTRANCES AS SHOWN ON THIS SHEET.

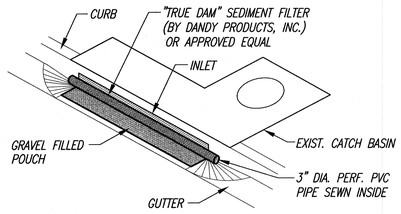

NOTES:

1. SEDIMENT AND DEBRIS AT THE SEDIMENT CONTROL FILTER AT CATCH BASINS SHALL BE CLEANED AND REMOVED WEEKLY IN DRY PERIODS AND WITHIN 24 HR PERIOD DURING RAINFALL. DAILY CHECKING IS NECESSARY. THE PERMITTEE SHALL MAINTAIN RECORDS OF CHECKS AND REMOVAL OF SEDIMENT AND DEBRIS.
2. DURING AN EVENT OF ABOVE NORMAL RAINFALL, THE CONTRACTOR SHALL REMOVE SEDIMENT FILTER AND REPLACE AFTER EVENT HAS PASSED.

DETAIL - SEDIMENT CONTROL FILTER AT CATCH BASIN

NOT TO SCALE

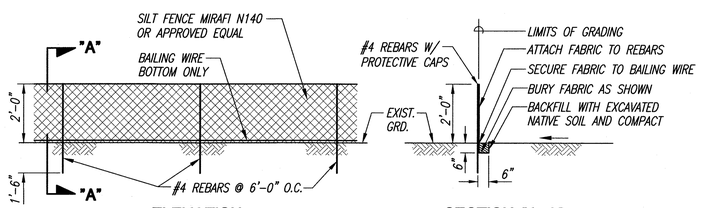

ELEVATION

SECTION "A-A"

DETAIL - SILT FENCE

NOT TO SCALE

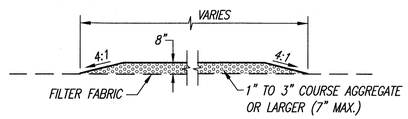

DETAIL - COMBINATION INGRESS/EGRESS

NOT TO SCALE

ANSON M. MURAYAMA
LICENSED PROFESSIONAL ENGINEER
No. 6975-C
HAWAII, U.S.A.

THIS WORK WAS PREPARED BY ME OR UNDER MY SUPERVISION. CONSTRUCTION OF THIS PROJECT WILL BE UNDER MY OBSERVATION. LICENSE EXPIRATION DATE: 04/30/14

REVISION DATE	DESCRIPTION	MADE BY	APPROVED

cp&e Community Planning and Engineering, Inc.
Engineering Design | Construction Management | Infrastructure Planning
1286 Queen Emma Street Honolulu, Hawaii

EAST KAPOLEI II DEVELOPMENT INCREMENT 2B

HONOULIULI, EWA, OAHU, HAWAII

(DPP SUBD. FILE NO. 2011/SUB-155)

OWNER & DEVELOPER: DEPARTMENT OF HAWAIIAN HOME LANDS

TAX MAP KEY: 9-1-17: Portion 110

EROSION CONTROL PLAN

DRAWN BY: LYLT	ENGINEER: FC	CHECKED BY: AMM

APPROVED:

M. Fog 6/28/13
CHIEF, CIVIL ENGINEERING BRANCH, D.P.P. DATE

DWG. NO. C-4

SHEET 5 OF 78 SHEETS

FILE	POCKET	FOLDER	NO.

P:\Land Projects\DHHL East Kapolei II\Increment II-B\Construction Drawings\Government Review #3\EROSION CONTROL PLAN GR#3.dwg, 5 EROSION CONTROL PLAN, 3/13/2013 1:33:57 PM, 1:1

GENERAL CONSTRUCTION NOTES

1. THE CONTRACTOR SHALL OBSERVE AND COMPLY WITH ALL FEDERAL, STATE AND LOCAL LAWS REQUIRED FOR THE PROTECTION OF PUBLIC HEALTH, SAFETY AND ENVIRONMENTAL QUALITY.
2. UTILITIES SHALL BE INSTALLED IN ACCORDANCE WITH ORDINANCE NOS. 2875 AND 3375 (UNDERGROUND UTILITIES).
3. NO CONTRACTOR SHALL PERFORM ANY CONSTRUCTION OPERATION SO AS TO CAUSE FALLING ROCKS, SOIL OR DEBRIS IN ANY FORM TO FALL, SLIDE OR FLOW INTO EXISTING CITY DRAINAGE SYSTEMS, ADJOINING PROPERTIES, STREETS, OR NATURAL WATERCOURSES. SHOULD SUCH VIOLATIONS OCCUR, THE CONTRACTOR MAY BE CITED AND THE CONTRACTOR SHALL IMMEDIATELY MAKE ANY REMEDIAL ACTIONS NECESSARY.
4. THE CONTRACTOR, AT HIS OWN EXPENSE, SHALL KEEP THE PROJECT AND SURROUNDING AREA FREE FROM DUST NUISANCE. THE WORK SHALL BE IN CONFORMANCE WITH THE AIR POLLUTION CONTROL STANDARDS AND REGULATIONS OF THE STATE DEPARTMENT OF HEALTH.
5. THE UNDERGROUND PIPES, CABLES OR DUCTLINES KNOWN TO EXIST BY THE ENGINEER FROM HIS SEARCH OF RECORDS ARE INDICATED ON THE PLANS. THE CONTRACTOR SHALL VERIFY THE LOCATIONS AND DEPTHS OF THE FACILITIES AND EXERCISE PROPER CARE IN EXCAVATING IN THE AREA. WHEREVER CONNECTIONS OF NEW UTILITIES TO EXISTING UTILITIES ARE SHOWN ON THE PLANS, THE CONTRACTOR SHALL EXPOSE THE EXISTING LINES AT THE PROPOSED CONNECTIONS TO VERIFY THEIR LOCATIONS AND DEPTHS PRIOR TO EXCAVATION FOR THE NEW LINES.
6. THE CONTRACTOR MAY SUBMIT A SUBSTITUTION REQUEST TO PRECAST ANY CITY OWNED AND/OR MAINTAINED DRAINAGE STRUCTURE (EX., CATCH BASINS, DRAIN MANHOLES, DRAIN INLETS, CULVERTS, ETC.). HOWEVER, PRIOR TO CONSTRUCTION AND INSTALLATION OF ANY PRECAST STRUCTURE, THE CONTRACTOR SHALL a) SUBMIT SIX (6) SETS OF SHOP DRAWINGS TO THE CIVIL ENGINEERING BRANCH, DEPARTMENT OF PLANNING AND PERMITTING AND OBTAIN WRITTEN APPROVAL AND (b) NOTIFY THE CIVIL ENGINEERING BRANCH, DEPARTMENT OF PLANNING AND PERMITTING AT 738-8084 TO ARRANGE FOR INSPECTIONAL SERVICES. NON-COMPLIANCE WITH ANY OF THESE REQUIREMENTS SHALL MEAN IMMEDIATE SUSPENSION OF ALL PRECAST CONSTRUCTION WORK AND REJECTION OF ALL PRECAST STRUCTURES ALREADY CONSTRUCTED.
7. THE CONTRACTOR SHALL BE RESPONSIBLE FOR CONFORMANCE WITH THE APPLICABLE PROVISIONS OF THE WATER QUALITY AND WATER POLLUTION CONTROL STANDARDS CONTAINED IN HAWAII ADMINISTRATIVE RULES, TITLE 11, CHAPTER 54, "WATER QUALITY STANDARDS", AND TITLE 11, CHAPTER 55, "WATER POLLUTION CONTROL", AS WELL AS CHAPTER 14 OF THE REVISED ORDINANCES OF HONOLULU, AS AMENDED. BEST MANAGEMENT PRACTICES SHALL BE EMPLOYED AT ALL TIMES DURING CONSTRUCTION.
8. ALL EXISTING UTILITIES, WHETHER OR NOT SHOWN ON THE PLANS, SHALL BE PROTECTED AT ALL TIMES UNLESS OTHERWISE NOTED.
9. THE CONTRACTOR SHALL PROVIDE, INSTALL AND MAINTAIN ALL NECESSARY SIGNS, LIGHTS, FLARES, BARRICADES, MARKERS, CONES, AND OTHER PROTECTIVE FACILITIES, AND SHALL TAKE ALL NECESSARY PRECAUTIONS FOR THE PROTECTION, CONVENIENCE AND SAFETY OF THE PUBLIC.
10. THE CONTRACTOR'S ATTENTION IS DIRECTED TO TITLE 11, CHAPTER 46, HAWAII ADMINISTRATIVE RULES, DEPARTMENT OF HEALTH, STATE OF HAWAII, "COMMUNITY NOISE CONTROL FOR OAHU", IN WHICH MAXIMUM ALLOWABLE NOISE LEVELS HAVE BEEN SET. IF THE CONSTRUCTION ACTIVITIES FOR THIS PROJECT WILL EXCEED THE ALLOWABLE NOISE LEVELS, THE CONTRACTOR WILL BE REQUIRED TO OBTAIN A PERMIT FROM THE DIRECTOR OF THE DEPARTMENT OF HEALTH. THE CONTRACTOR SHALL OBTAIN A COPY OF CHAPTER 46 AND BECOME FAMILIAR WITH THE NOISE LEVEL RESTRICTIONS AND THE PROCEDURES FOR OBTAINING A PERMIT FOR CONSTRUCTION ACTIVITIES.
11. PURSUANT TO CHAPTER 6E, HRS, IN THE EVENT ANY ARTIFACTS OR HUMAN REMAINS ARE UNCOVERED DURING CONSTRUCTION OPERATIONS, THE CONTRACTOR SHALL IMMEDIATELY SUSPEND WORK AND NOTIFY THE HONOLULU POLICE DEPARTMENT, THE STATE DEPARTMENT OF LAND AND NATURAL RESOURCES-HISTORIC PRESERVATION DIVISION (692-8015). IN ADDITION, FOR NON-CITY PROJECTS, THE CONTRACTOR SHALL INFORM THE CIVIL ENGINEERING BRANCH, DEPARTMENT OF PLANNING AND PERMITTING (768-8084); AND FOR CITY PROJECTS, NOTIFY THE RESPONSIBLE CITY AGENCY.
12. WHEREVER CONNECTIONS OF NEW UTILITIES TO EXISTING UTILITIES ARE SHOWN ON THE PLANS, THE CONTRACTOR SHALL EXPOSE THE EXISTING LINES AT THE PROPOSED CONNECTIONS TO VERIFY THEIR LOCATIONS AND DEPTHS PRIOR TO EXCAVATION FOR THE NEW LINES.
13. DURING NON-WORKING HOURS, THE TRENCHES ON CITY STREETS SHALL BE COVERED WITH NON-SKID STEEL PLATES AND ALL LANES MAINTAINED OPEN FOR TRAFFIC.
14. CONTRACTOR TO PROVIDE AS-BUILT DRAWINGS.
15. FOR BENCH MARK, SEE DWG. NO. T-1.
16. THE CONTRACTOR SHALL NOTIFY THE CIVIL ENGINEERING BRANCH, DEPARTMENT OF PLANNING AND PERMITTING AT 768-8084 TO ARRANGE FOR INSPECTIONAL SERVICES AND SUBMIT TWO (2) SETS OF APPROVED CONSTRUCTION PLANS SEVEN (7) DAYS PRIOR TO COMMENCEMENT OF CONSTRUCTION WORK.
17. ALL APPLICABLE CONSTRUCTION WORK SHALL BE DONE IN ACCORDANCE WITH THE STANDARD SPECIFICATIONS FOR PUBLIC WORKS CONSTRUCTION, SEPTEMBER 1986 AND THE STANDARD DETAILS FOR PUBLIC WORKS CONSTRUCTION, SEPTEMBER 1984, AS AMENDED, OF THE DEPARTMENT OF PUBLIC WORKS, CITY AND COUNTY OF HONOLULU AND THE COUNTIES OF KAUAI, MAUI, AND HAWAII.
18. CONFINED SPACE FOR ENTRY BY CITY PERSONNEL, INCLUDING INSPECTORS, INTO A PERMIT REQUIRED CONFINED SPACE AS DEFINED IN 29 CFR PART 1910.146(B), THE CONTRACTOR SHALL BE RESPONSIBLE FOR PROVIDING:
    1. ALL SAFETY EQUIPMENT REQUIRED BY THE CONFINED SPACE REGULATIONS APPLICABLE TO ALL PARTIES OTHER THAN THE CONSTRUCTION INDUSTRY, TO INCLUDE, BUT NOT LIMITED TO, THE FOLLOWING:
        - A. FULL BODY HARNESSES FOR UP TO TWO PERSONNEL.
        - B. LIFELINE AND ASSOCIATED CLIPS.
        - C. INGRESS/EGRESS AND FALL PROTECTION EQUIPMENT.
        - D. TWO-WAY RADIOS (WALKIE-TALKIES) IF OUT OF LINE-OF-SIGHT.
        - E. EMERGENCY (ESCAPE) RESPIRATOR (10 MINUTE DURATION).
        - F. CELLULAR TELEPHONE TO CALL FOR EMERGENCY ASSISTANCE.
        - G. CONTINUOUS GAS DETECTOR (CALIBRATED) TO MEASURE OXYGEN, HYDROGEN SULFIDE, CARBON MONOXIDE AND FLAMMABLES (CAPABLE OF MONITORING AT A DISTANCE OF LEAST 20-FEET AWAY.
        - H. PERSONAL MULTI-GAS DETECTOR TO BE CARRIED BY INSPECTOR.
    2. CONTINUOUS FORCED AIR VENTILATION ADEQUATE TO PROVIDE SAFE ENTRY CONDITIONS.
    3. ONE ATTENDANT/RESCUE PERSONNEL TOPSIDE (TWO, IF CONDITIONS WARRANT IT).
19. THE CONTRACTOR SHALL OBTAIN AND COMPLY WITH NATIONAL POLLUTION DISCHARGE ELIMINATION SYSTEM (NPDES) PERMIT REQUIREMENTS FOR ALL PROJECTS WHICH WILL DISTURB ONE (1) ACRE OR MORE OF LAND. THE CONTRACTOR SHALL NOT START CONSTRUCTION UNTIL NOTICE OF GENERAL PERMIT COVERAGE (NGPC) IS RECEIVED FROM THE DEPARTMENT OF HEALTH, STATE OF HAWAII AND HAS SATISFIED ANY OTHER REQUIREMENTS OF THE NPDES PERMIT PROGRAM.

TRAFFIC NOTES FOR WORK ON CITY & COUNTY STREETS

1. A PERMIT SHALL BE OBTAINED FROM THE DEPARTMENT OF TRANSPORTATION SERVICES BEFORE WORK ON ANY PORTION OF A PUBLIC STREET OR HIGHWAY MAY BEGIN. CONSTRUCTION TRAFFIC CONTROL PLANS APPROVED BY THE DEPARTMENT OF TRANSPORTATION SERVICES AND/OR THE DEPARTMENT OF PLANNING AND PERMITTING MUST BE PROVIDED WHEN APPLYING FOR THE PERMIT.
2. THE CONTRACTOR SHALL PROVIDE, INSTALL AND MAINTAIN ALL NECESSARY SIGNS AND OTHER PROTECTIVE FACILITIES, WHICH SHALL CONFORM WITH THE "HAWAII ADMINISTRATIVE RULES GOVERNING THE USE OF TRAFFIC CONTROL DEVICES AT WORK SITES ON OR ADJACENT TO PUBLIC STREETS AND HIGHWAYS" ADOPTED BY THE DIRECTOR OF TRANSPORTATION, AND THE CURRENT U.S. FEDERAL HIGHWAYS ADMINISTRATION'S "MANUAL ON UNIFORM TRAFFIC CONTROL DEVICES FOR STREETS AND HIGHWAYS, PART VI – TRAFFIC CONTROLS FOR STREET AND HIGHWAY CONSTRUCTION AND MAINTENANCE OPERATIONS".
3. WORK ON ANY CITY STREET AREA MAY BE PERFORMED ONLY BETWEEN THE HOURS OF 8:30 A.M. TO 3:30 P.M., MONDAY THROUGH FRIDAY, UNLESS OTHERWISE PERMITTED BY THE DEPARTMENT OF TRANSPORTATION SERVICES.
4. DURING WORKING HOURS, THE CONTRACTOR SHALL PROVIDE FOR THROUGH TRAFFIC. DURING NON-WORKING HOURS, ALL TRENCHES SHALL BE COVERED WITH A SAFE NON-SKID BRIDGING MATERIAL AND ALL LANES SHALL BE OPEN TO TRAFFIC.
5. AS REQUIRED BY THE DEPARTMENT OF TRANSPORTATION SERVICES, THE CONTRACTOR SHALL PROVIDE OFF-DUTY POLICE OFFICERS TO CONTROL THE FLOW OF TRAFFIC.
6. WHERE PEDESTRIAN WALKWAYS EXIST, THEY SHALL BE MAINTAINED IN PASSABLE CONDITION OR OTHER FACILITIES FOR PEDESTRIANS SHALL BE PROVIDED. PASSAGE BETWEEN WALKWAYS AT INTERSECTIONS SHALL LIKEWISE BE PROVIDED.
7. DRIVEWAYS SHALL BE KEPT OPEN UNLESS THE OWNERS OF THE PROPERTY USING THESE RIGHTS-OF-WAY ARE OTHERWISE PROVIDED FOR SATISFACTORILY.
8. CONTRACTOR SHALL REFERENCE TO THE APPROVAL OF THE DEPARTMENT OF TRANSPORTATION SERVICES AND THE DEPARTMENT OF PLANNING AND PERMITTING; ALL EXISTING TRAFFIC SIGNS, POSTS AND PAVEMENT MARKINGS PRIOR TO THE COMMENCEMENT OF CONSTRUCTION. THE CONTRACTOR SHALL REPLACE OR REPAIR ALL TRAFFIC SIGNS, POSTS AND PAVEMENT MARKINGS DISTURBED BY HIS ACTIVITIES.
9. THE CONTRACTOR SHALL NOTIFY THE DEPARTMENT OF PLANNING AND PERMITTING AT 768-8084 ONE (1) WEEK PRIOR TO ANY WORK BEING DONE ON SIGNS, POST AND PAVEMENT MARKINGS.
10. NO EQUIPMENT SHALL BE STORED WITHIN STREET RIGHTS-OF-WAY EXCEPT AT LOCATIONS DESIGNATED IN WRITING AND APPROVED BY THE DEPARTMENT OF TRANSPORTATION SERVICES.
11. THE DEPARTMENT OF HAWAIIAN HOME LANDS SHALL ENSURE THAT THE CONTRACTOR INSTALLS THE CONSTRUCTION TRAFFIC CONTROL DEVICES IN ACCORDANCE WITH THE MUTCD AND THE HAWAII ADMINISTRATIVE RULES AS SPECIFIED IN TRAFFIC NOTE #2.

MECHANICAL & ELECTRICAL DIVISION NOTES:

1. THE CONTRACTOR SHALL NOTIFY THE JOINT POLE COMMITTEE TWO (2) WEEKS IN ADVANCE OF ANY RELOCATION OF UTILITY POLE(S) THAT MAY BE NECESSARY.
2. THE CONTRACTOR SHALL NOTIFY THE MECHANICAL & ELECTRICAL DIVISION, DEPARTMENT OF DESIGN AND CONSTRUCTION, THREE (3) WORKING DAYS PRIOR TO COMMENCING WORK ON THE STREET LIGHTING SYSTEM (PHONE: 768-8431).
3. THE STREET LIGHTING SYSTEM SHALL BE KEPT OPERATIONAL DURING CONSTRUCTION. ANY RELOCATION REQUIRED SHALL BE APPROVED BY THE MECHANICAL & ELECTRICAL DIVISION, DEPARTMENT OF DESIGN AND CONSTRUCTION, AND PAID FOR BY THE CONTRACTOR.
4. THE CONTRACTOR SHALL BE RESPONSIBLE FOR ANY DAMAGES TO EXISTING STREET LIGHTING FACILITIES. ANY AND ALL DAMAGES TO THESE FACILITIES SHALL BE REPAIRED BY THE CONTRACTOR AT HIS COST, IN ACCORDANCE WITH THE REQUIREMENTS OF THE CITY AND COUNTY OF HONOLULU.
5. THE CONTRACTOR SHALL BE RESPONSIBLE FOR ANY DAMAGES TO THE CITY'S EXISTING COMMUNICATIONS FIBER OPTIC CABLE SYSTEM. ANY AND ALL DAMAGES TO THESE FACILITIES SHALL BE REPAIRED BY THE CONTRACTOR AT HIS COST IN ACCORDANCE WITH THE REQUIREMENTS OF THE CITY AND COUNTY OF HONOLULU.

DISABILITY AND COMMUNICATION ACCESS BOARD (DCAB) REQUIREMENTS

WHERE PEDESTRIAN WALKWAYS EXIST, THEY SHALL BE MAINTAINED IN PASSABLE CONDITION OR OTHER FACILITIES FOR PEDESTRIANS SHALL BE PROVIDED. PASSAGE BETWEEN WALKWAYS AT INTERSECTIONS SHALL LIKEWISE BE PROVIDED. TEMPORARY PEDESTRIAN PASSAGEWAYS SHALL BE ACCESSIBLE AND SHALL COMPLY WITH ADAAG 201.3 AND 206.1.

ARCHAEOLOGICAL NOTE

IF DURING CONSTRUCTION, ANY PREVIOUSLY UNIDENTIFIED SITES OR REMAINS (SUCH AS ARTIFACTS, SHELL, BONE, OR CHARCOAL DEPOSITS, HUMAN BURIALS, ROCK OR CORAL ALIGNMENTS, PAVINGS, OR WALLS) ARE ENCOUNTERED, THE APPLICANT SHALL STOP WORK AND CONTACT THE STATE DLNR HISTORIC SITES OFFICE AT 692-8015 IMMEDIATELY. WORK IN THE IMMEDIATE AREA SHALL BE STOPPED UNTIL THE OFFICE IS ABLE TO ASSESS THE IMPACT AND MAKE FURTHER RECOMMENDATIONS FOR MITIGATIVE ACTIVITY.

NOTES FOR PUBLIC HEALTH, SAFETY AND CONVEYANCE

1. THE CONTRACTOR SHALL OBSERVE AND COMPLY WITH ALL FEDERAL, STATE AND LOCAL LAWS REQUIRED FOR THE PROTECTION OF PUBLIC HEALTH AND SAFETY AND ENVIRONMENTAL QUALITY.
2. THE CONTRACTOR AT HIS OWN EXPENSE SHALL KEEP THE PROJECT AND ITS SURROUNDING AREAS FREE FROM DUST NUISANCE. THE WORK SHALL BE IN CONFORMANCE WITH THE AIR POLLUTION STANDARDS AND REGULATIONS OF THE STATE DEPARMENT OF HEALTH. CONTRACTOR SHALL BE IN CONFORMANCE WITH THE HAWAII ADMINISTRATIVE RULES, CHAPTER 11-60.1-33.
3. THE CONTRACTOR SHALL PROVIDE, INSTALL AND MAINTAIN ALL NECESSARY SIGNS, LIGHTS, FLARES, BARRICADES, MARKERS, CONES AND OTHER PROTECTIVE FACILITIES AND TAKE ALL NECESSARY PRECAUTIONS FOR THE PROTECTION, CONVEYANCE AND SAFETY OF THE PUBLIC.
4. THE CONTRACTOR SHALL NOTIFY THE OWNER AND ENGINEER UPON DISCOVERY OF STAINED SOIL OR OLFACTORY EVIDENCE OF A SUSPECTED PETROLEUM OR SOLVENT RELEASE INTO THE ENVIRONMENT. IF THERE ARE ANY FUEL SPILLAGES, EXISTING LEAKS, ETC. FOUND DURING CONSTRUCTION, REPORT THE FOREGOING TO THE HAZARDOUS EVALUATION AND EMERGENCY RESPONSE UNIT (PH. NO. 586-4249) OR THE DEPARTMENT OF HEALTH. FOR NON-WORKING HOURS, CALL THE STATE HOSPITAL OPERATOR (PH. NO. 247-2191).

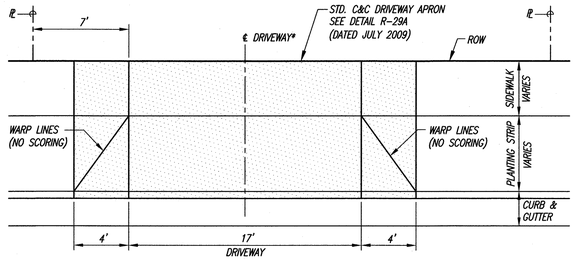

NOTES:
1. SEE TYPICAL ROAD SECTIONS, DWG. NO. C-10 FOR SIDEWALK AND PLANTING STRIP WIDTHS.
2. *DRIVEWAYS LOCATED OTHER THAN 7' FROM ℄ ARE LOCATED BY THE ROAD STATION OF THE DRIVEWAY CENTERLINE.
3. CONTRACTOR SHALL COMPLY WITH THE CITY AND COUNTY OF HONOLULU ENGINEERING AND POLICY MEMORANDUM NO. CEB-1-09 "JOINTING REQUIREMENTS FOR CONCRETE SIDEWALKS AND DRIVEWAYS" DATED APRIL 6, 2009.

TYPICAL DRIVEWAY DETAIL

NOT TO SCALE

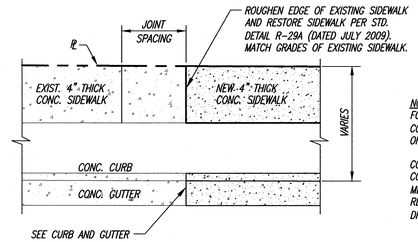

NOTE:
FOR GRASSED AREA, RESTORE BACK TO ORIGINAL CONDITION OR BETTER. PROVIDE 4" MIN. TOPSOIL OR MATCH EXISTING, WHICHEVER IS GREATER.

CONTRACTOR SHALL COMPLY WITH THE CITY AND COUNTY OF HONOLULU ENGINEERING AND POLICY MEMORANDUM NO. CEB-1-09 "JOINTING REQUIREMENTS FOR CONCRETE SIDEWALKS AND DRIVEWAYS" DATED APRIL 6, 2009.

SIDEWALK CONNECTION DETAIL

NOT TO SCALE

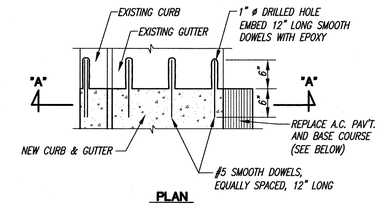

PLAN

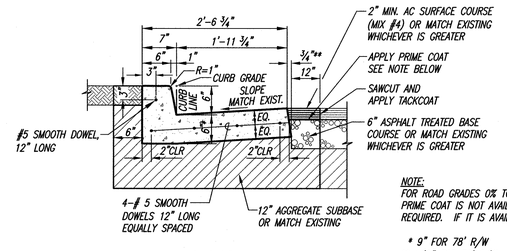

SECTION "A"-"A"

NOTE:
FOR ROAD GRADES 0% TO 7.99% AND PRIME COAT IS NOT AVAILABLE, NONE REQUIRED. IF IT IS AVAILABLE, USE IT.

* 9" FOR 78' R/W
** 1⅛" FOR 78' R/W

CURB AND GUTTER CONNECTION DETAIL

NOT TO SCALE

REVISION DATE	DESCRIPTION	MADE BY	APPROVED

cp&e — Community Planning and Engineering, Inc.
Engineering Design | Construction Management | Infrastructure Planning
1288 Queen Emma Street, Honolulu, Hawaii

EAST KAPOLEI II DEVELOPMENT INCREMENT 2B

HONOULULI, EWA, OAHU, HAWAII
(DPP SUBD. FILE NO. 2011/SUB-155)
OWNER & DEVELOPER: DEPARTMENT OF HAWAIIAN HOME LANDS
TAX MAP KEY: 9-1-17: Portion 110

GENERAL NOTES - 1

DRAWN BY: LYLT	ENGINEER: SS	CHECKED BY: AMM

APPROVED:

M. Tsuji 6/28/13
CHIEF, CIVIL ENGINEERING BRANCH, D.P.P. DATE

CHIEF, TRAFFIC REVIEW BRANCH, D.P.P. DATE 6/5/13

ANSON M. MURAYAMA
LICENSED PROFESSIONAL ENGINEER
No. 6975-C
HAWAII, U.S.A.

THIS WORK WAS PREPARED BY ME OR UNDER MY SUPERVISION. CONSTRUCTION OF THIS PROJECT WILL BE UNDER MY OBSERVATION. LICENSE EXPIRATION DATE: 04/30/14

DWG. NO. C-5

SHEET 6 OF 78 SHEETS

FILE	POCKET	FOLDER	NO.

P:\Land Projects\DHHL East Kapolei II\Increment II-B\Construction Drawings\Government Review #3\GENERAL NOTES - 1 GR#3.dwg, 6 GENERAL NOTES - 1, 3/13/2013 1:03:25 PM, 1:1

WATER NOTES

1. UNLESS OTHERWISE SPECIFIED, ALL MATERIALS AND CONSTRUCTION OF WATER SYSTEM FACILITIES AND APPURTENANCES SHALL BE IN ACCORDANCE WITH THE CITY AND COUNTY OF HONOLULU BOARD OF WATER SUPPLY'S "WATER SYSTEM STANDARDS", DATED 2002, THE "WATER SYSTEM EXTERNAL CORROSION CONTROL STANDARDS", VOLUME 3, DATED 1991, AND ALL SUBSEQUENT AMENDMENTS AND ADDITIONS.
2. ALL PLANS APPROVED BY THE BOARD OF WATER SUPPLY ARE BASED SOLELY ON THE ADEQUACY OF THE WATER SUPPLY. ALL OTHER FEATURES OF THE WATER SYSTEM, SUCH AS LINES, GRADES, FITTINGS, DRAINAGE, ETC., AND OTHER FEATURES OF IMPROVEMENTS SHALL NOT BE THE RESPONSIBILITY OF THE BOARD OF WATER SUPPLY.
3. UNLESS OTHERWISE SPECIFIED, ALL LATERALS AND CONNECTIONS SHALL BE COPPER TYPE "C-1", WITH BLIND METER SPLICE LENGTHS AT 7-1/2 INCHES TO ACCOMMODATE 3/4 INCH METERS. TYPE "C-1" SERVICE LATERALS SHALL BE ONE 1-1/2 INCH DIAMETER LATERAL BRANCHING TO TWO 1-INCH DIAMETER CONNECTIONS.
4. TEST PRESSURE SHALL BE 150 PSI. DURING THE 30-MINUTE PRESSURE TEST, THE PRESSURE SHALL NOT DROP MORE THAN 10 PSI.
5. THE CONTRACTOR SHALL NOTIFY BWS CAPITAL PROJECTS DIVISION, CONSTRUCTION SECTION IN WRITING AND SUBMIT SIX (6) SETS OF APPROVED CONSTRUCTION PLANS ONE WEEK PRIOR TO COMMENCING WORK ON THE WATER SYSTEM.
6. AFTER INSTALLATION OF TAPPING SLEEVE AND VALVE PRIOR TO ACTUAL TAPPING OPERATIONS, THE ASSEMBLY SHALL BE TESTED AT 150 PSI ON BOTH SIDES OF THE VALVE.
7. THE CONTRACTOR SHALL CHLORINATE THE ENTIRE SURFACE OF EACH PIPE AND FITTING WITH DISINFECTION SOLUTION OF 5 OUNCES OF SODIUM HYPOCHLORITE MIXED WITH 10 GALLONS OF WATER. (FOR CONNECTION ONLY)
8. THE CONTRACTOR SHALL BE RESPONSIBLE FOR THE PROTECTION OF ALL WATER LINES DURING CONSTRUCTION. THE CONTRACTOR SHALL BE ESPECIALLY CAREFUL WHEN EXCAVATING BEHIND WATER LINES, TEES AND BENDS WHEREVER THERE IS A POSSIBILITY OF WATER LINE MOVEMENT DUE TO THE REMOVAL OF THE SUPPORTING EARTH BEYOND THE EXISTING REACTION BLOCKS. THE CONTRACTOR SHALL TAKE WHATEVER MEASURE NECESSARY TO PROTECT THE WATER LINES, SUCH AS CONSTRUCTING SPECIAL REACTION BLOCKS (WITH BWS APPROVAL) AND/OR MODIFYING HIS CONSTRUCTION METHOD.
9. THE EXISTENCE AND LOCATION OF UNDERGROUND UTILITIES AND STRUCTURES AS SHOWN ON THE PLANS ARE FROM THE LATEST AVAILABLE DATA BUT IS NOT GUARANTEED AS TO THE ACCURACY OR THE ENCOUNTERING OF OTHER OBSTACLES DURING THE COURSE OF THE WORK. THE CONTRACTOR SHALL BE RESPONSIBLE AND SHALL PAY FOR ALL DAMAGES TO EXISTING UTILITIES. THE CONTRACTOR SHALL NOT ASSUME THAT WHERE NO UTILITIES ARE SHOWN, THAT NONE EXIST.
10. PRIOR TO INSTALLATION, THE CONTRACTOR SHALL SUBMIT FOR APPROVAL BY BOARD OF WATER SUPPLY, THE MANUFACTURER'S CERTIFICATION THAT ALL CAST IRON (GRAY OR DUCTILE) FITTINGS FOR THE PROJECT CONFORM IN ALL RESPECTS TO THE WATER SYSTEM STANDARDS, DATED 2002.
11. POLYGON SHAPE FOR MECHANICAL JOINT GLANDS AS DESCRIBED IN AWWA STANDARD C111 SHALL BE "STRAIGHT-SIDED" OR AN APPROVED EQUAL ON A JOB-TO-JOB BASIS.
12. RE-APPROVAL SHALL BE REQUIRED IF THIS PROJECT IS NOT UNDER CONSTRUCTION WITHIN A PERIOD OF TWO YEARS.
13. CONTRACTOR SHALL CUT AND PLUG ALL EXISTING UNUSED LATERALS AT THE MAIN WHETHER OR NOT SHOWN ON THE PLANS. METER AND VALVE BOXES TO BE OR ALREADY ABANDONED SHALL BE DEMOLISHED OR REMOVED AND PROPERLY DISPOSED OF. THE DAMAGED AREA SHALL BE REPAIRED TO AN EQUAL OR BETTER CONDITION THAN THE IMMEDIATE AREA. ALL WORK SHALL BE DONE AT THE EXPENSE OF THE CONTRACTOR.
14. THE CONTRACTOR SHALL FURNISH AND INSTALL POLYETHYLENE WRAP, 3 FEET MINIMUM AT ALL TAPS (FOR DI PIPE AND COPPER LATERAL COMBINATION ONLY) AND PLASTIC PIPE (PE TUBING) 3 FEET LONG AFTER METERS FOR ALL SERVICE LATERAL CONNECTIONS.
15. ADEQUATE OFFSITE FIRE PROTECTION MEETING THE BWS STANDARD SHALL BE INSTALLED AND COMPLETED PRIOR TO CONSTRUCTION OF HOMES INCLUDING MODEL HOMES.
16. AT THE ELECTRICAL/SIGNAL DUCTLINE WATER CROSSINGS, ADJUST ALL ELECTRICAL/SIGNAL DUCTLINE ELEVATIONS TO MAINTAIN 6" VERTICAL CLEAR SEPARATION FROM ALL WATERLINES (12" CLEAR FOR ALL ELECTRICAL/SIGNAL DUCTLINE STRUCTURES LARGER THAN 16") AT NO COST TO THE BOARD OF WATER SUPPLY.
17. MAINTAIN 3'-0" MIN. HORIZONTAL CLEAR SEPARATION BETWEEN ALL WATERLINE SYSTEMS AND NEAREST ELECTRICAL/SIGNAL DUCTLINES PARALLELING THE WATER SYSTEM AT NO COST TO THE BOARD OF WATER SUPPLY.
18. MAINTAIN 3'-0" MIN. HORIZONTAL CLEAR SEPARATION BETWEEN STREET LIGHT/TRAFFIC SIGNAL STANDARDS (INCLUDING ANY MODULAR UNITS) AND THE NEAREST WATER SYSTEM. CONTRACTOR SHALL FIELD VERIFY FOR ANY CONFLICTS AT EACH STREET LIGHT/TRAFFIC SIGNAL STANDARD LOCATION. WHERE CONFLICTS OCCUR, THE CONTRACTOR SHALL COORDINATE WITH THE PROJECT ENGINEER TO REVISE THE STREET LIGHT/TRAFFIC SIGNAL STANDARD TO PROVIDE THE REQUIRED CLEARANCES AT NO COST TO THE BWS.
19. THE CONTRACTOR/DEVELOPER SHALL OBTAIN A NPDES PERMIT PRIOR TO CHLORINATION AND/OR DEWATERING. A COPY OF THE PERMIT SHALL BE SUBMITTED TO THE BOARD OF WATER SUPPLY, CAPITAL PROJECTS DIVISION, CONSTRUCTION SECTION.
20. PIPE CUSHION SHALL BE OF HIGH RESISTIVITY MATERIAL. THE CONTRACTOR SHALL SUBMIT A SOIL CERTIFICATION THAT HIGH RESISTANT CUSHION MATERIAL HAS A RESISTIVITY GREATER THAN 5,000 OHM-CM. REMAINDER OF THE BACKFILL MATERIAL SHALL BE AS SPECIFIED IN THE WATER SYSTEM STANDARDS. PIPE CUSHION AND BACKFILL MATERIAL SHALL CONTAIN NO HAZARDOUS SUBSTANCES ABOVE REGULATORY ACTION LEVELS INCLUDING BUT NOT LIMITED TO LEAD, ASBESTOS, MERCURY, CHROMIUM, CADMIUM, ZINC, STRONTIUM, AND POLYCHLORINATED BIPHENYLS (PBC).
21. BWS WILL NOT SEND COMPLETION NOTICES TO DPP SUBDIVISION BRANCH UNTIL EASEMENT DOCUMENTS ARE SUBMITTED TO BWS AND RECORDED.
22. UPON COMPLETION OF THE PROJECT, THE DEVELOPER SHALL PROVIDE THE BWS WITH A CERTIFICATE FROM A REGISTERED SOILS ENGINEER CERTIFYING THAT THE ROAD PRISM HAS BEEN CONSTRUCTED IN ACCORDANCE TO CITY AND COUNTY ROADS STANDARDS.
23. ALL DUCTILE IRON PIPE, FITTINGS AND VALVES SHALL BE WRAPPED WITH TWO LAYERS OF 8 MIL. POLYETHYLENE WRAP.
24. TWO-WAY BLUE REFLECTIVE HYDRANT MARKERS TYPE DB SHALL BE INSTALLED AT ALL NEW FIRE HYDRANT INSTALLATIONS. CONTRACTOR SHALL VERIFY THE EXACT LOCATIONS OF HYDRANT MARKERS WITH THE NEAREST HONOLULU FIRE DEPARTMENT BATTALION CHIEF.
25. CLEANING SHALL BE BY THE USE OF "PIGS" INTRODUCED INTO THE PIPELINE AND RUN COMPLETELY THROUGH ALL INSTALLED PIPELINES AND ALL BRANCH LINES FOR FIRE HYDRANTS. "PIGGING" OF SERVICE LATERALS IS NOT REQUIRED. BARE FOAM "PIGS" SHALL BE USED TO SWAB PIPING CLEAN AS EACH LENGTH OF THE PIPELINE IS INSTALLED. EACH "PIG" SHALL CONSIST OF A CYLINDRICAL PIECE OF POLYURETHANE FOAM WITH A DENSITY OF 3-7 POUNDS PER CUBIC FOOT AND A VINYL-COATED NOSE. OUTSIDE DIAMETER OF THE "PIG" SHALL BE EQUAL TO 1-1/4 TO 1-1/2 TIMES THE INSIDE DIAMETER OF THE PIPE BEING INSTALLED. THE LENGTH OF THE "PIG" SHALL BE 1-1/2 TO 2 TIMES ITS DIAMETER. PRIOR TO USE, THE "PIG" SHALL BE SUBMERGED IN A CHLORINE SOLUTION OF 1 OZ. OF 5% CHLORINE BLEACH IN 5 GALLONS OF WATER. "PIGGING" OF THE PIPELINE SHALL BE CONSIDERED INCIDENTAL TO THE INSTALLATION OF THE NEW PIPELINE.
26. ~~ALL SECTIONS OF THE WATER MAIN REQUIRING REINFORCED CONCRETE JACKETING SHALL BE DUCTILE IRON PIPE OR CONCRETE CYLINDER PIPE AND FITTINGS.~~
27. BALL CORP AND BALL STOP SHALL BE USED IN LIEU OF A CORPORATION STOP AND STOPCOCK, RESPECTIVELY.
28. INSTALL 4 MIL. THICK, NON-METALLIC, BLUE COLORED, 6 INCHES WIDE WARNING TAPE OVER CENTERLINE OF THE PIPE AND BELOW THE BASE COURSE ALONG THE ENTIRE LENGTH OF TRENCH. TAPE SHOULD BE MARKED WITH "CAUTION WATER LINE BURIED BELOW".
29. THE CONTRACTOR SHALL INSTALL ELECTRONIC MARKERS TO ALL MAINS AND TEST THE ELECTRONIC MARKERS PRIOR TO INSTALLATIONS TO VERIFY PROPER OPERATION. BWS PERSONNEL SHALL VERIFY THE NUMBER AND LOCATIONS OF PLACED ELECTRONIC MARKERS BEFORE FINAL PAVING OF THE PROJECT.
30. WATER PIPELINE CHLORINATION AND TESTING PROCEDURES:
    A. THE FOLLOWING CHLORINATION AND WATER SAMPLE COLLECTION PROCEDURE SHALL APPLY TO ALL WATER PIPELINE PROJECTS:

       STEP 1: CHLORINATE MAIN BY FILLING WITH WATER AND INTRODUCING CHLORINE IN SUFFICIENT QUANTITY TO OBTAIN A MINIMUM CHLORINE CONCENTRATION OF 50 PARTS PER MILLION. LEAVE CHLORINATED WATER IN MAIN OVERNIGHT.

       STEP 2: FLUSH MAIN WITH FRESH WATER UNTIL ALL CHLORINE HAS BEEN FLUSHED OUT AS EVIDENCED BY THE ORTHO-TOLIDINE TEST, THEN COLLECT A WATER SAMPLE WHILE CONTINUING TO FLUSH THE MAIN.

       STEP 3: REPEAT STEPS 1 AND 2. AFTER COLLECTING THE SECOND WATER SAMPLE, STOP FLUSHING AND ALLOW THE WATER TO STAND IN THE MAIN OVERNIGHT.
       STEP 4: THOROUGHLY FLUSH THE MAIN WITH FRESH WATER UNTIL ALL WATER THAT HAD BEEN STANDING IN THE MAIN OVERNIGHT HAS BEEN FLUSHED OUT. STOP FLUSHING AND LET THE WATER STAND IN THE MAIN FOR ONE HOUR. COLLECT A WATER SAMPLE.

    B. THE MAIN IS DEEMED ACCEPTABLE AND CERTIFIED WHEN (1) TWO CONSECUTIVE WATER SAMPLES, COLLECTED 24 HOURS APART UNDER STEPS 1 AND 2, SHOW NO TOTAL AND FECAL COLIFORM AND LESS THAN 200 COLONY FORMING UNITS (CFU) OF TOTAL BACTERIA AND (2) THE SAMPLE OF WATER HELD IN THE MAIN FOR ONE HOUR, COLLECTED UNDER STEP 4, ALSO SHOWS NO TOTAL AND FECAL COLIFORM AND LESS THAN 200 CFU OF TOTAL BACTERIA.
    C. CHLORINATION, FLUSHING, SAMPLING AND TESTING WILL BE EXTENDED SHOULD UNSATISFACTORY RESULTS BE ENCOUNTERED. ANY SAMPLE THAT SHOWS POSITIVE COLIFORM PRESENCE OR TOTAL BACTERIA GREATER THAN 200 CFU IS UNSATISFACTORY.
    D. STEPS 1 AND 2 MAY BE REPEATED BEFORE COLLECTING THE ONE-HOUR HOLD SAMPLE SPECIFIED IN STEP 4. REPEATING STEPS 1 AND 2 IS RECOMMENDED IN THE EVENT SAMPLES SHOW THE PRESENCE OF COLIFORMS AND/OR INCREASING TOTAL BACTERIAL RESULTS FROM ONE SAMPLE TO THE NEXT.
    E. WATER SAMPLES THAT SHOW THE PRESENCE OF ATYPICAL COLONIES, DEBRIS OR RESULTS INCONSISTENT WITH EXISTING WATER ARE SUBJECT TO RECONFIRMATION. BWS RESERVES THE RIGHT TO REQUEST AND TEST ADDITIONAL WATER SAMPLES IN THE INTEREST OF SAFEGUARDING PUBLIC HEALTH AND SAFETY.
31. BOARD OF WATER SUPPLY APPROVAL OF THESE PLANS DOES NOT CONSTITUTE A WATER COMMITMENT. AVAILABILTY OF WATER WILL BE DETERMINED WHEN BUILDING PERMIT IS PRESENTED TO THE DEPARTMENT. WATER COMMITMENT WILL DEPEND UPON THE STATUS OF THE WATER SYSTEM AT THE TIME. SHOULD WATER SERVICE BE MADE AVAILABLE, THE WATER COMMITMENT WILL BE EFFECTIVE WHEN THE PROJECT RECEIVES AN APPROVED BUILDING PERMIT FROM THE BUILDING DEPARTMENT. ALL WATER COMMITMENTS WILL BE CANCELED IN THE EVENT THE BUILDING PERMIT IS CANCELED.
32. POLYVINYL CHLORIDE (PVC) PIPES SHALL BE CLASS 150 (DR=18). ALL DUCTILE IRON VALVES AND METALLIC FITTINGS SHALL BE WRAPPED WITH TWO LAYERS OF 8 MIL POLYETHELENE WRAP. NO BENDING OF POLYVINYL CHLORIDE PIPES SHALL BE PERMITTED. THE INSTALLATION OF PVC PIPE, ACCORDING TO THE PLANS AND SPECIFICATIONS AS BID ON BY THE CONTRACTOR, MAY REQUIRE ADDITIONAL DESIGN WORK, ADDITIONAL FITTINGS AND SPECIAL COUPLINGS SHALL BE CONSIDERED INCIDENTAL TO THE UNIT PRICE BID IN THE PROPOSAL FOR PVC PIPE. ANY ADDITIONAL DESIGN WORK SHALL BE THE RESPONSIBILITY OF THE CONTRACTOR.
33. ALL POLYVINYL CHLORIDE (PVC) PIPE DEFLECTIONS SHALL BE ACCOMPLISHED ONLY BY THE USE OF SPECIAL PVC DEFLECTION COUPLINGS. DEFLECTION AROUND CURVES SHALL BE ACCOMPLISHED ONLY BY THE USE OF PVC DEFLECTION COUPLINGS.
34. ALL SECTIONS OF THE WATER MAIN REQUIRING REINFORCED CONCRETE JACKETING SHALL BE DUCTILE IRON PIPE CLASS 52 WITH DUCTILE IRON FITTINGS ~~OR CONCRETE CYLINDER PIPE AND FITTINGS.~~
35. BOSSED TEES REQUIRED FOR ALL LATERAL AND ARV CONNECTIONS TO PVC MAINS 12" AND SMALLER. DUCTILE IRON CONNECTOR PIECES TAPPED ARE REQUIRED FOR ALL LATERAL AND ARV CONNECTION TO PVC MAINS LARGER THAN 12".
36. ALL PVC FITTINGS SHALL CONFORM TO AMERICAN WATER WORKS ASSOCIATIONS (AWWA) C-907. DUCTILE IRON FITTINGS SHALL BE USED FOR ALL TYPES OF FITTINGS NOT SPECIFIED IN AWWA C-907.
37. REACTION BLOCK REQUIREMENTS FOR PVC FITTINGS SHALL BE THE SAME FOR DUCTILE IRON FITTINGS.
38. THE USE OF HUB CLAMPS AND SET SCREWS ON PVC FITTINGS IS NOT APPROVED.
39. PRIOR TO THE PVC FITTING INSTALLATION, THE CONTRACTOR SHALL SUBMIT FOR APPROVAL BY THE BWS, THE MANUFACTURER'S CERTIFICATION THAT ALL PVC FITTINGS CONFORM TO AWWA C-907.

SPECIAL WATER NOTES

1. WATER METERS AND BOXES SHALL BE CLEAR OF DRIVEWAYS AND ELECTRICAL PULLBOXES.
2. THE CONTRACTOR SHALL INSTALL ELECTRONIC MARKERS TO ALL MAINS AND TEST THE ELECTRONIC MARKERS PRIOR TO INSTALLATIONS TO VERIFY PROPER OPERATION. BWS PERSONNEL SHALL VERIFY THE NUMBER AND LOCATIONS OF PLACED ELECTRONIC MARKERS BEFORE FINAL PAVING OF THE PROJECT.
3. FIBER OPTIC DUCTLINES SHALL BE INSTALLED AT A MINIMUM OF 5' HORIZONTAL CLEARANCE TO WATERLINES.
   WHERE 5' CLEARANCE IS NOT FEASIBLE, DUCTLINES SHALL BE AT LEAST 3' CLEAR, HORIZONTALLY, AND SHALL BE CONCRETE JACKETED, OR ENCASED AND GROUTED IN A CARRIER PIPE.
   WHERE 3' CLEARANCE IS NOT POSSIBLE, DUCTLINES SHALL BE INSTALLED TO PROVIDE AS MUCH HORIZONTAL CLEARANCE AS POSSIBLE, WITH THE FOLLOWING REQUIREMENTS:
   A. FOR OPEN TRENCH INSTALLATION, DUCTLINE SHALL BE CONCRETE JACKETED AND AT LEAST 18" BELOW THE WATERLINE.
   B. FOR DIRECTIONAL DRILLING, DUCTLINE SHALL BE ENCASED AND GROUTED AND SHALL BE AT LEAST 3' BELOW THE WATERLINE.
4. THE CONTRACTOR WILL PROVIDE ADEQUATE SUPPORT FOR THE WATERLINE WHEN THE INSTALLATION OF THE FIBER OPTIC LINE IS INSTALLED UNDER OUR MAIN. FIBER OPTIC LINES WILL BE ALLOWED TO CROSS UNDER A WATERLINE, ONLY ON A STRAIGHT PORTION OF PIPE, WITHOUT THE PRESENCE OF ANY BENDS OR SUPPORTS.

RECYCLED WATER SYSTEM

1. UNLESS OTHERWISE SPECIFIED, ALL MATERIALS AND CONSTRUCTION OF WATER SYSTEM FACILITIES AND APPURTENANCES SHALL BE IN ACCORDANCE WITH THE CITY AND COUNTY OF HONOLULU BOARD OF WATER SUPPLY'S "WATER SYSTEM STANDARDS", DATED 2002, THE "WATER SYSTEM EXTERNAL CORROSION CONTROL STANDARDS", VOLUME 3, DATED 1991, AND THE DEPARTMENT OF HEALTH "GUIDELINES FOR THE TREATMENT AND USE OF RECYCLED WATER" DATED MAY 15, 2002, AND ALL SUBSEQUENT AMENDMENTS AND ADDITIONS.
2. ALL PLANS APPROVED BY THE BOARD OF WATER SUPPLY ARE BASED SOLELY ON THE ADEQUACY OF THE WATER SUPPLY. ALL OTHER FEATURES OF THE WATER SYSTEM, SUCH AS LINES, GRADES, FITTINGS, DRAINAGE, ETC., AND OTHER FEATURES OF IMPROVEMENTS SHALL NOT BE THE RESPONSIBILITY OF THE BOARD OF WATER SUPPLY.
3. RE-APPROVAL SHALL BE REQUIRED IF THIS PROJECT IS NOT UNDER CONSTRUCTION WITHIN A PERIOD OF TWO YEARS.
4. TEST PRESSURE SHALL BE 150 PSI. DURING THE 30-MINUTE PRESSURE TEST, THE PRESSURE SHALL NOT DROP MORE THAN 10 PSI.
5. THE CONTRACTOR SHALL NOTIFY BWS CAPITAL PROJECTS DIVISION, CONSTRUCTION SECTION IN WRITING AND SUBMIT SIX (6) SETS OF APPROVED CONSTRUCTION PLANS ONE WEEK PRIOR TO COMMENCING WORK ON THE WATER SYSTEM.
6. THE EXISTENCE AND LOCATION OF UNDERGROUND UTILITIES AND STRUCTURES AS SHOWN ON THE PLANS ARE FROM THE LATEST AVAILABLE DATA BUT IS NOT GUARANTEED AS TO THE ACCURACY OR THE ENCOUNTERING OF OTHER OBSTACLES DURING THE COURSE OF THE WORK. THE CONTRACTOR SHALL BE RESPONSIBLE AND SHALL PAY FOR ALL DAMAGES TO EXISTING UTILITIES. THE CONTRACTOR SHALL NOT ASSUME THAT WHERE NO UTILITIES ARE SHOWN, THAT NONE EXIST.
7. PRIOR TO INSTALLATION, THE CONTRACTOR SHALL SUBMIT FOR APPROVAL BY BOARD OF WATER SUPPLY, THE MANUFACTURER'S CERTIFICATION THAT ALL CAST IRON (GRAY OR DUCTILE) FITTINGS FOR THE PROJECT CONFORM IN ALL RESPECTS TO THE WATER SYSTEM STANDARDS, DATED 2002.
8. THE CONTRACTOR SHALL BE RESPONSIBLE FOR THE PROTECTION OF ALL WATER LINES DURING CONSTRUCTION. THE CONTRACTOR SHALL BE ESPECIALLY CAREFUL WHEN EXCAVATING BEHIND WATER LINES, TEES AND BENDS WHEREVER THERE IS A POSSIBILITY OF WATER LINE MOVEMENT DUE TO THE REMOVAL OF THE SUPPORTING EARTH BEYOND THE EXISTING REACTION BLOCKS. THE CONTRACTOR SHALL TAKE WHATEVER MEASURE NECESSARY TO PROTECT THE WATER LINES, SUCH AS CONSTRUCTING SPECIAL REACTION BLOCKS (WITH BWS APPROVAL) AND/OR MODIFYING HIS CONSTRUCTION METHOD.
9. INTERCONNECTION BETWEEN RECYCLED WATER MAINS AND POTABLE MAINS SHALL NOT BE ALLOWED.
10. MATERIALS FOR FRAMES AND COVERS OF MANHOLES, VALVE BOXES, AND METER BOXES SHALL CONFORM TO THE REQUIREMENTS SPECIFIED IN THE WATER SYSTEM STANDARD. THE RECYCLED WATER COVERS SHALL BE CAST WITH THE WORDS "RECYCLED WATER" AND SHALL BE PROVIDED WITH A 24-INCH LONG GALVANIZED STEEL COIL CHAIN, 3/16-INCH WITH 12.5 LINKS PER FOOT, AND BE WELDED TO THE FRAME AND COVER. IN LIEU OF THE CAST "RECYCLED WATER" MATERIALS MAY BE PAINTED PURPLE FOR IDENTIFICATION PURPOSES.
11. HORIZONTAL CLEARANCE OF 3-FEET AND VERTICAL CLEARANCE OF 6-INCHES SHALL BE MAINTAINED BETWEEN RECYCLED WATER AND OTHER LINES.
12. VALVE COVERS, MANHOLE COVERS, FIRE HYDRANTS, METER COVERS AND BODIES SHALL BE ALL PAINTED PURPLE (PANTONE 522 OR EQUAL) FOR IDENTIFICATION.
13. PVC C900 PIPE SHALL BE IN COMPLIANCE WITH AWWA C900, 4-INCH TO 12-INCH. ALL RECYCLED WATER C900 PVC MAINS SHALL BE MARKED ON OPPOSITE SIDES TO READ "CAUTION RECYCLED WATER - DO NOT DRINK" IN INTERVALS NOT GREATER THAN FIVE FEET. LETTERS SHALL BE A MINIMUM OF 3/4 INCHES HIGH. RECYCLED WATER C900 PVC MAINS MAY BE PURPLE IN COLOR.

RECYCLED WATER SYSTEM (CONT.)

14. PVC C905 PIPE SHALL BE IN COMPLIANCE WITH AWWA C905, 14-INCH TO 36-INCH. ALL RECYCLED WATER C905 PVC MAINS SHALL BE MARKED ON OPPOSITE SIDES TO READ "CAUTION RECYCLED WATER - DO NOT DRINK" IN INTERVALS NOT GREATER THAN FIVE FEET. LETTERS SHALL BE A MINIMUM OF 3/4 INCHES HIGH. RECYCLED WATER C905 PVC MAINS MAY BE PURPLE IN COLOR.
15. PRIOR TO ANY EXCAVATING, THE CONTRACTOR SHALL VERIFY IN THE FIELD THE LOCATION OF EXISTING WATER MAINS AND APPURTENANCES.
16. AT THE ELECTRICAL/SIGNAL DUCTLINE WATER CROSSINGS, ADJUST ALL ELECTRICAL/SIGNAL DUCTLINE ELEVATIONS TO MAINTAIN 6" VERTICAL CLEAR SEPARATION FROM ALL WATERLINES (12" CLEAR FOR ALL ELECTRICAL/SIGNAL DUCTLINE STRUCTURES LARGER THAN 16") AT NO COST TO THE BOARD OF WATER SUPPLY.
17. MAINTAIN 3'-0" MIN. HORIZONTAL CLEAR SEPARATION BETWEEN ALL WATERLINE SYSTEMS AND NEAREST ELECTRICAL/SIGNAL DUCTLINES PARALLELING THE WATER SYSTEM AT NO COST TO THE BOARD OF WATER SUPPLY.
18. MAINTAIN 3'-0" MIN. HORIZONTAL CLEAR SEPARATION BETWEEN STREET LIGHT/TRAFFIC SIGNAL STANDARDS (INCLUDING ANY MODULAR UNITS) AND THE NEAREST WATER SYSTEM. CONTRACTOR SHALL FIELD VERIFY FOR ANY CONFLICTS AT EACH STREET LIGHT/TRAFFIC SIGNAL STANDARD LOCATION. WHERE CONFLICTS OCCUR, THE CONTRACTOR SHALL COORDINATE WITH THE PROJECT ENGINEER TO REVISE THE STREET LIGHT/TRAFFIC SIGNAL STANDARD TO PROVIDE THE REQUIRED CLEARANCE AT NO COST TO THE BWS.
19. THE CONTRACTOR SHALL COORDINATE THE SECURING OF THE EXISTING WATER SYSTEM WITH THE BWS PRIOR TO EXCAVATING BEHIND OR REMOVING ANY EXISTING THRUST BLOCKS. STRUCTURAL STRUTS OR REACTION BEAMS, OR ANY FITTINGS SUCH AS TEES, PLUGS, CAPS, BENDS, OFFSETS, AND VALVES, OR ANY OTHER PIPELINE APPURTENANCE. THE CONTRACTOR SHALL BE RESPONSIBLE FOR ALL ASSOCIATED DAMAGES RESULTING FROM FAILURE TO ADEQUATELY SECURE THE EXISTING SYSTEM.
20. HORIZONTAL AND VERTICAL CLEARANCES BETWEEN POTABLE WATER AND OTHER UTILITIES, NAMELY RECYCLED WATER LINES SHALL CONFORM WITH THE "WATER SYSTEM STANDARDS" DEPARTMENT OF WATER, COUNTY OF KAUAI; BOARD OF WATER SUPPLY, CITY AND COUNTY OF HONOLULU; DEPARTMENT OF WATER SUPPLY, COUNTY OF MAUI; DEPARTMENT OF WATER SUPPLY, COUNTY OF HAWAII; VOLUME 1 [26]. FURTHERMORE, THE MINIMUM EASEMENT OR RIGHT-OF-WAY WIDTHS, AND MINIMUM COVER AND REQUIREMENTS FOR NON-POTABLE SHALL ALSO CONFORM TO THIS REFERENCE.
21. ALL NEW BURIED TRANSMISSION PIPING IN THE RECYCLED WATER SYSTEM, INCLUDING SERVICE LINES, VALVES, AND OTHER APPURTENANCES SHALL BOTH BE COLORED PURPLE, SUGGESTED COLOR PANTONE 522 OR EQUAL, AND EMBOSSED OR BE INTEGRALLY STAMPED/MARKED "CAUTION: RECYCLED WATER-DO NOT DRINK," OR BE INSTALLED WITH A PURPLE IDENTIFICATION TAPE, OR A PURPLE POLYETHYLENE WRAP, SUGGESTED COLOR INDEX 77742 VIOLET #16, PANTONE 512 OR EQUAL.
22. IDENTIFICATION TAPE SHALL BE PREPARED WITH WHITE OR BLACK PRINTING ON A PURPLE FIELD, SUGGESTED COLOR INDEX 77742 VIOLET #16, PANTONE 512 OR EQUAL, HAVING THE WORDS "CAUTION: RECYCLED WATER - DO NOT DRINK." THE OVERALL WIDTH OF THE TAPE SHALL BE AT LEAST THREE (3) INCHES. IDENTIFICATION TAPES SHALL BE INSTALLED ON TOP OF NEW TRANSMISSION PIPE LONGITUDINALLY AND SHALL BE CENTERED. THE IDENTIFICATION SHALL BE CONTINUOUS IN THEIR COVERAGE ON THE PIPE AND SHALL BE FASTENED TO EACH PIPE LENGTH NO MORE THAN TEN FEET APART. TAPE ATTACHED TO SECTIONS OF PIPE BEFORE THEY ARE PLACED IN THE TRENCH SHALL HAVE FLAPS SUFFICIENT FOR CONTINUOUS COVERAGE. OTHER SATISFACTORY MEANS OF SECURING THE TAPE DURING BACKFILL OF THE TRENCH MAY BE USED IF SUITABLE FOR THE WORK, AS DETERMINED BY THE RECLAMATION AGENCY.
23. VALVE BOXES AND COVERS SHALL CONFORM TO THE DEPARTMENT OF HEALTH "GUIDELINES FOR THE TREATMENT AND USE OF RECYCLED WATER", REVISED 2002, OR AS APPROVED BY THE DEPARTMENT OF HEALTH. ALL VALVE COVERS ON OFFSITE RECLAMATION TRANSMISSION WATER LINES SHALL BE OF NON-INTERCHANGEABLE SHAPE WITH POTABLE WATER COVERS AND WITH A RECOGNIZABLE INSCRIPTION CAST ON THE TOP SURFACE "RECYCLED WATER".
24. ALL ABOVE GROUND EXISTING AND NEW FACILITIES SHALL BE CONSISTENTLY COLOR CODED PURPLE, SUGGESTED COLOR INDEX 77742 VIOLET #16, PANTONE 512, OR EQUAL AND MARKED TO DIFFERENTIATE RECYCLED WATER APPURTENANCES FROM POTABLE WATER OR WASTEWATER.
25. EITHER AN IN-LINE TYPE OR END-OF-LINE TYPE DRAIN (BLOW-OFF) ASSEMBLY SHALL BE INSTALLED FOR REMOVING WATER OR SEDIMENT FROM THE PIPE. THE LINE TAP FOR THE ASSEMBLY SHALL BE NO CLOSER THAN 18-INCHES TO A VALVE, COUPLING, JOINT, OR FITTING UNLESS IT IS AT THE END OF THE LINE. SINCE THERE ARE RESTRICTIONS ON RUNOFF AND PONDING AND THERE MAY BE RESTRICTIONS ON INFILTRATION, THE METHOD FOR DISPOSAL OF THE DRAIN WATER SHALL BE PRESENTED TO THE DEPARTMENT OF HEALTH FOR APPROVAL.

NPDES REQUIREMENTS FOR PERMIT PROJECTS WITHIN STATE HIGHWAY RIGHT-OF-WAY

THE CONTRACTOR SHALL OBTAIN AND COMPLY WITH THE "NATIONAL POLLUTANT DISCHARGE ELIMINATION SYSTEM (NPDES) REQUIREMENTS FOR OAHU DISTRICT PERMIT PROJECTS." THIS IS AVAILABLE AT THE OAHU DISTRICT OFFICE AT 727 KAKOI STREET (PH. 831-6793). DUE TO POTENTIAL COST IMPACTS, THE CONTRACTOR NEEDS TO BE AWARE OF THESE REQUIREMENTS.

THE CONTRACTOR SHALL COMPLETE AND SUBMIT A "CONTRACTOR'S CERTIFICATE OF NPDES COMPLIANCE," INCLUDING COMPLETION OF THE "BEST MANAGEMENT PRACTICE (BMP) CHECKLIST" AND SUBMITTAL OF A WRITTEN BMP PLAN AND DRAWINGS, PRIOR TO ISSUANCE OF THE PERMIT TO PERFORM WORK UPON STATE HIGHWAYS.

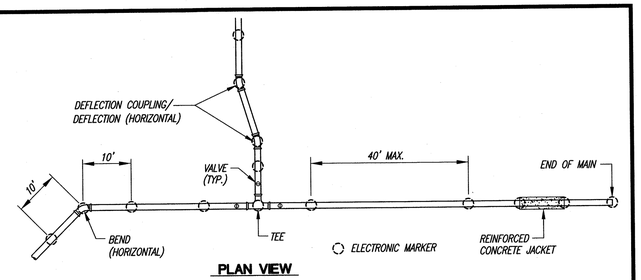

PLAN VIEW

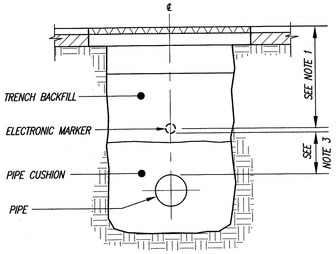

SECTION VIEW

NOTES:
1. INSTALL ELECTRONIC MARKER OVER CENTERLINE OF PIPE AT A MINIMUM DEPTH OF 2 FEET AND A MAXIMUM DEPTH OF 3 FEET FROM FINISH GRADE.
2. INSTALL TRENCH BACKFILL AND PIPE CUSHION MATERIAL IN ACCORDANCE TO THE PLANS AND SPECIFICATIONS.
3. INSTALL ELECTRONIC MARKER AT A MINIMUM CLEARANCE OF 6-INCHES ABOVE THE PIPE OR CONCRETE JACKET.

TYPICAL ELECTRONIC MARKER INSTALLATION
NOT TO SCALE

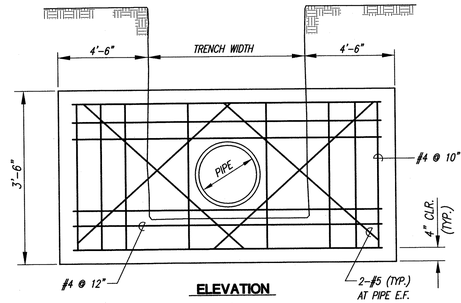

ELEVATION

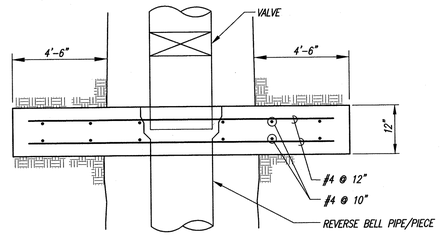

PLAN

CONCRETE THRUST BEAM
NOT TO SCALE

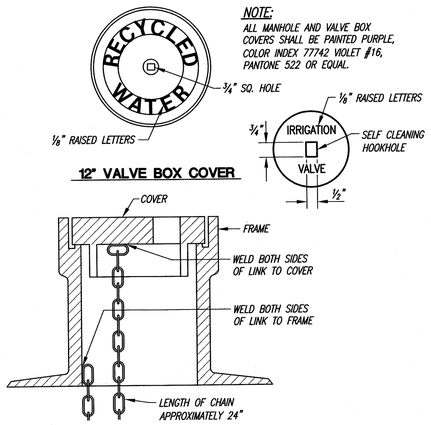

NOTE:
ALL MANHOLE AND

SEWER NOTES (PRIVATE / DHHL OWNED)

1. ALL SEWER CONSTRUCTION SHALL BE PERFORMED IN ACCORDANCE WITH THE STANDARD SPECIFICATIONS FOR PUBLIC WORKS CONSTRUCTION, SEPTEMBER 1986, STANDARD DETAILS FOR PUBLIC WORKS CONSTRUCTION, SEPTEMBER 1984, AS AMENDED, OF THE DEPARTMENT OF PUBLIC WORKS, CITY AND COUNTY OF HONOLULU AND THE COUNTIES OF KAUAI, MAUI AND HAWAII, CURRENT CITY PRACTICES, THE REVISED ORDINANCES OF HONOLULU, 1990, AS AMENDED, AND THE DESIGN STANDARDS OF THE DEPARTMENT OF WASTEWATER MANAGEMENT, VOL. 1, JULY 1993.
2. IN THE EVENT THAT ANY CHANGE IN ALIGNMENT OR GRADE FOR THE PROPOSED SEWERS ARE REQUIRED DUE TO UNFORSEEN CONFLICT WITH OTHER UTILITIES, THE ENGINEER IN CHARGE OR THE MAKER OF THE PLANS SHALL BE RESPONSIBLE FOR THE REQUIRED CHANGES WHICH ARE TO BE PRESENTED TO THE DEPARTMENT OF PLANNING AND PERMITTING (DPP) FOR APPROVAL.
3. THE CONTRACTOR SHALL NOTIFY THE CIVIL ENGINEERING BRANCH, DEPARTMENT OF PLANNING AND PERMITTING, AT 768-8084 TO ARRANGE FOR INSPECTIONAL SERVICES, CALL 7 DAYS PRIOR TO COMMENCEMENT OF SEWER WORK. SUBMIT FOUR (4) SETS OF APPROVED CONSTRUCTION PLANS. THE CONTRACTOR SHALL PAY FOR ALL INSPECTION COSTS.
4. CRUSHED ROCK CRADLE IS PERMITTED WHERE SOIL IS STABLE. IN AREAS OF UNSTABLE SOIL, THE MAKER OF THE PLANS AND THE CONSTRUCTION ENGINEER WILL DETERMINE THE PIPE SUPPORT REQUIRED.
5. TREES IN THE ROAD RIGHT-OF-WAY SHALL BE SITUATED A MINIMUM OF FIVE (5) FEET FROM THE CITY'S SEWER LINES.
6. THE UNDERGROUND PIPES, CABLES OR DUCTLINES KNOWN TO EXIST BY THE ENGINEER FROM HIS RESEARCH OF RECORDS ARE INDICATED ON THE PLANS. THE CONTRACTOR SHALL VERIFY THE LOCATION AND DEPTH OF THE FACILITIES, INCLUDING AND AFFECTING SEWER LINES, IN THE PRESENCE OF THE DPP INSPECTOR AND EXERCISE PROPER CARE IN EXCAVATING THE AREA. THE CONTRACTOR SHALL BE RESPONSIBLE AND SHALL PAY FOR ALL DAMAGED UTILITIES.
7. SEWER LATERAL SHALL BE CLEAR OF AND NOT CONFLICTING WITH ANY OTHER UTILITY. MINIMUM HORIZONTAL AND VERTICAL CLEARANCES SHALL BE STRICTLY OBSERVED AND FOLLOWED.
8. SLOPE FOR SEWER LATERALS SHALL BE 1.00% UNLESS OTHERWISE NOTED.
9. BUILDING PLUMBING FACILITIES SHALL BE CONTROLLED BY SEWER LATERAL INVERTS.
10. THE CONTRACTOR SHALL BE RESPONSIBLE FOR MAINTAINING CONTINUOUS SEWER SERVICE TO ALL AFFECTED AREAS DURING CONSTRUCTION.
11. THE CONSULTING ENGINEER SHALL SUBMIT TO THE DEPARTMENT OF PLANNING AND PERMITTING, MYLAR "AS-BUILT" TRACINGS OF THE CONSTRUCTION PLANS AS ACTUALLY CONSTRUCTED, SHOWING ALL CHANGES FROM THE ORIGINAL PLANS.
12. THE CONTRACTOR SHALL BE RESPONSIBLE FOR ANY SEWAGE SPILLS CAUSED DURING CONSTRUCTION. THE CONTRACTOR SHALL NOTIFY THE STATE DEPARTMENT OF HEALTH AND UTILIZE APPROPRIATE SAMPLING AND ANALYZING PROCEDURES. THE CONTRACTOR SHALL BE RESPONSIBLE FOR ALL PUBLIC NOTIFICATIONS AND PRESS RELEASES.
13. THE CONTRACTOR SHALL INSTALL "RAINSTOPPER" MANHOLE INSERTS IN ALL SEWER MANHOLES WITH TYPE "SA" FRAME AND COVER.
14. ALL DROP AND SHALLOW DROP SEWER MANHOLES SHALL BE LINED WITH EPOXY. ALSO, IF THE VELOCITY EXCEEDS TEN (10) FEET PER SECOND (FPS), THE SEWER MANHOLE SHALL BE EPOXY LINED.
15. THE CONTRACTOR SHALL OBTAIN APPROVAL FOR ADVANCE SEWER RISER AGREEMENT AT THE DEPARTMENT OF PLANNING AND PERMITING AND OBTAIN PLUMBING PERMIT FOR PLUMBING WORK BEFORE ANY ADVANCE RISER IS MADE.
16. ALL SEWER PIPE JOINTS WITHIN EASEMENTS SHALL BE WRAPPED WITH GEOTEXTILE ROOT BARRIER.
17. S4C PIPE CRADLE SEALS SHALL BE INSTALLED 10 FEET FROM ALL SEWER MANHOLES TO PREVENT SOIL MIGRATION. SEE DETAIL, THIS SHEET.
18. GEOTEXTILE FABRIC TO ENVELOP THE PIPE CRADLE AND SELECT BACKFILL MATERIAL SHALL BE PROVIDED WHERE WATER OR UNSTABLE SOIL CONDITIONS ARE ENCOUNTERED.
19. CONFINED SPACE FOR ENTRY BY CITY PERSONNEL, INCLUDING INSPECTORS, INTO A PERMIT REQUIRED CONFINED SPACE AS DEFINED IN 29 CFR PART 1910.146(b), THE CONTRACTOR SHALL BE RESPONSIBLE FOR PROVIDING:
    A. ALL SAFETY EQUIPMENT REQUIRED BY THE CONFINED SPACE REGULATIONS APPLICABLE TO ALL PARTIES OTHER THAN THE CONSTRUCTION INDUSTRY, TO INCLUDE, BUT NOT LIMITED TO, THE FOLLOWING:
        1. FULL BODY HARNESSES FOR UP TO TWO PERSONNEL.
        2. LIFELINE AND ASSOCIATED CLIPS.
        3. INGRESS/EGRESS AND FALL PROTECTION EQUIPMENT.
        4. TWO-WAY RADIOS (WALKIE-TALKIES) IF OUT OF LINE-OF-SIGHT.
        5. EMERGENCY (ESCAPE) RESPIRATOR (10 MINUTE DURATION).
        6. CELLULAR TELEPHONE TO CALL FOR EMERGENCY ASSISTANCE.
        7. CONTINUOUS GAS DETECTOR (CALIBRATED) TO MEASURE OXYGEN, HYDROGEN SULFIDE, CARBON MONOXIDE AND FLAMMABLES (CAPABLE OF MONITORING AT A DISTANCE AT LEAST 20-FEET AWAY).
        8. PERSONAL MULTI-GAS DETECTOR TO BE CARRIED BY INSPECTOR.
    B. CONTINUOUS FORCED AIR VENTILATION ADEQUATE TO PROVIDE SAFE ENTRY CONDITIONS.
    C. ONE ATTENDANT/RESCUE PERSONNEL TOPSIDE (TWO, IF CONDITIONS WARRANT IT).
20. WHEN CONNECTING TO A LIVE SEWER LINE, THE CONTRACTOR SHALL ABIDE BY ALL CONDITIONS THAT THE STATE DEPARTMENT OF HEALTH SETS FORTH TO MITIGATE ANY WASTEWATER SPILL THAT MAY OCCUR. THE CONTRACTOR SHALL INFORM THE CITY'S INSPECTOR FIVE (5) WORKING DAYS PRIOR TO THE ACTUAL CONNECTION. THE CONTRACTOR SHALL BE RESPONSIBLE FOR ANY FINES AND PENALTIES DUE TO ANY SPILLS RESULTING FROM THE CONNECTION.
21. THE DEPARTMENT OF HAWAIIAN HOME LANDS (DHHL) SHALL PAY TO THE CITY THE APPLICABLE WASTEWATER SYSTEM FACILITY CHARGE.
22. NO RUNGS SHALL BE INSTALLED INSIDE NEW SEWER MANHOLES.

SPECIAL PROVISIONS FOR PVC PLASTIC SEWER PIPE (FOR PIPES 6" TO 12" IN DIAMETER ONLY)

1. POLYVINYL CHLORIDE (PVC) PLASTIC SEWER PIPE AND APPURTENANCES USED ON THIS PROJECT SHALL CONFORM TO THE REQUIREMENTS OF SECTION 21 OF THE STANDARD SPECIFICATIONS FOR PUBLIC WORKS CONSTRUCTION DATED SEPTEMBER 1986, EXCEPT AS MODIFIED HEREIN.
    A. GENERAL. PVC GRAVITY SEWER PIPE AND FITTINGS SHALL CONFORM TO THE REQUIREMENTS OF AWWA C-900/C-905, CLASS 100PSI., DR=25. THE PIPE SHALL BE GREEN IN COLOR.
    B. ACCEPTANCE. THE BASIS FOR ACCEPTANCE SHALL BE THE INSPECTION OF PIPE, FITTINGS AND COUPLINGS, THE TESTS SPECIFIED HEREIN AND IN SECTION 21, AND COMPLIANCE WITH THE SPECIFICATIONS. AT THE TIME OF MANUFACTURE, EACH LOT OF PIPE AND FITTINGS SHALL BE INSPECTED FOR DEFECTS AND TESTED FOR IMPACT, STIFFNESS AND FLATTENING IN ACCORDANCE WITH ASTM D3034. THE ENGINEER MAY REQUIRE CERTIFICATION BY THE MANUFACTURER THAT THE TEST RESULTS COMPLY WITH SPECIFICATION REQUIREMENTS. WHEN THE PIPE IS DELIVERED TO THE JOB SITE, THE ENGINEER MAY REQUIRE THE CONTRACTOR TO PROVIDE ADDITIONAL TESTING TO INSURE THE QUALITY OF THE PIPE AT NO EXPENSE TO THE CITY. PIPE WHICH IS NOT INSTALLED WITHIN 120 DAYS OF THE LATEST FACTORY TEST SHALL NOT BE USED WITHOUT PRIOR APPROVAL OF THE ENGINEER.
    C. SELECTION OF TEST PIPE. WHEN TESTING IS REQUIRED BY THE ENGINEER, ONE TEST PIPE SHALL BE SELECTED AT RANDOM BY THE ENGINEER FROM EACH 1200 LINEAR FEET OR FRACTION THEREOF OF EACH SIZE OF PIPE DELIVERED TO THE JOB SITE BUT NO LESS THAN ONE TEST PIPE PER LOT. A LOT SHALL BE DEFINED AS PIPE HAVING THE SAME IDENTIFICATION MARKING. THE LENGTH OF SPECIMEN OF EACH SELECTED PIPE SHALL BE A MINIMUM OF 8 FEET.
    D. CELL CLASSIFICATION. PIPE SHALL BE MADE OF PVC PLASTIC HAVING A CELL CLASSIFICATION OF 12454-B, 13364-A, OR 13364-B AS DEFINED IN ASTM D1784. THE FITTINGS SHALL BE MADE OF PVC PLASTIC HAVING A CELL CLASSIFICATION D1784. THE FITTINGS SHALL BE MADE OF PVC PLASTIC HAVING A CELL CLASSIFICATION OF 12454-B, 12454-C, OR 13343-C. PVC COMPOUNDS OF OTHER CELL CLASSIFICATIONS SHALL BE PRE-QUALIFIED BY THE MANUFACTURER.
    E. JOINTS. PIPE JOINTS SHALL BE BELL AND SPIGOT TYPE WITH AN ELASTOMERIC GASKET. THE GASKETED JOINTS SHALL BE MANUFACTURED WITH A SOCKET CONFIGURATION WHICH WILL PRECLUDE IMPROPER INSTALLATION OF THE GASKET AND WILL INSURE THE GASKET REMAINS IN PLACE DURING THE JOINING OPERATION. ALL PIPE SHALL HAVE A HOME MARK ON THE SPIGOT END TO INDICATE PROPER PENETRATION WHEN THE JOINT IS MADE.
    F. IDENTIFICATION MARKS. ALL PIPE FITTINGS AND COUPLINGS SHALL BE CLEARLY MARKED AT AN INTERVAL NOT TO EXCEED 5 FEET AS FOLLOWS:
        (1) NOMINAL PIPE DIAMETER.
        (2) PVC CELL CLASSIFICATION.
        (3) COMPANY, PLANT, SHIFT, ASTM, SDR, AND DATE DESIGNATIONS.
        (4) SERVICE DESIGNATION AND LEGEND.

SPECIAL PROVISIONS FOR PVC PLASTIC SEWER PIPE (CONT.)

G. DIMENSIONS AND TOLERANCES:

TABLE - PIPE DIMENSION (INCHES)

NOMINAL SIZE	AVERAGE O.D.	TOLERANCE ON AVERAGE	MINIMUM WALL THICKNESS	APPROX. WT./20' LENGTH (LBS.)
6	6.275	±0.011	0.180	49.4
8	8.400	±0.012	0.240	88.5
10	10.500	±0.015	0.300	138.6
12	12.500	±0.018	0.360	198.1

H. CHEMICAL RESISTANCE. THE PVC COMPOUND FOR CELL CLASSIFICATIONS NOT SPECIFICALLY IDENTIFIED IN ITEM D ABOVE SHALL BE PREQUALIFIED BY THE PIPE MANUFACTURER BY MEETING THE CHEMICAL RESISTANCE TESTS WHICH FOLLOW. COMPOUND SAMPLES AND MOLDED TEST SPECIMENS SHALL BE PREPARED IN ACCORDANCE WITH ASTM D543.

TENSILE AND IZOD IMPACT EXPOSURE SPECIMENS SHALL BE IMMERSED IN THE SOLUTIONS SPECIFIED IN TABLE 2 FOR A PERIOD OF 112 DAYS. TEST SPECIMENS SHALL BE CONDITIONED TO CONSTANT WEIGHT AT 110°F (43.3°C) BEFORE AND AFTER SUBMERSION. THE SOLUTIONS SHALL BE KEPT AT A TEMPERATURE OF 77°F ±5°F (24°C ±3°C). AT 28-DAY INTERVALS, SELECTED SPECIMENS SHALL BE REMOVED, WASHED, SURFACE DRIED AND TESTED.

TABLE 2 - TEST SOLUTIONS

CHEMICAL SOLUTION	CONCENTRATION (%)
SULFURIC ACID	20 *
SODIUM HYDROXIDE	5
AMMONIUM HYDROXIDE	5 *
NITRIC ACID	1 *
FERRIC CHLORIDE	1
SOAP	0.1
DETERGENT (LINEAR ALKYL BENZYL SULFONATE OR LAS)	0.1
BACTERIOLOGICAL	BOD NOT LESS THAN 70 PPM

* VOLUMERIC PERCENTAGES OF CONCENTRATED REAGENTS OF C.P. GRADE

WEIGHT CHANGE SPECIMENS SHALL BE 2 INCHES IN DIAMETER AND MAY BE MOLDED DISCS OR DISCS CUT FROM THE PIPE WALL. SPECIMENS SHALL BE CONDITIONED FOR SEVEN DAYS AT 43° ±2°C, COOLED IN A DESICCATOR FOR THE THREE HOURS AT 23° ±2°C, WEIGHED, AND THEN IMMERSED IN THE SOLUTIONS. AT 4 WEEK INTERVALS, SELECTED SPECIMENS SHALL BE REMOVED, WASHED, SURFACE DRIED AND WEIGHED. THESE SAME SPECIMENS SHALL THEN BE RECONDITIONED FOR SEVEN DAYS AT 43° ±2°C, COOLED IN A DESICCATOR FOR THREE HOURS AT 23° ±2°C AND AGAIN WEIGHED.

INITIAL AND POST EXPOSURE SPECIMENS SHALL MEET THE FOLLOWING REQUIREMENTS WHEN TESTED AT 23° ±2°C:

PROPERTY	ASTM TEST METHOD	CELL CLASS MINIMUM VALUES 12454	13343	13364
TENSILE STRENGTH (YEILD), PSI	D 638	7000	6000	6000
IMPACT STRENGTH, FT-LBS/IN.	D 256 METHOD A	0.65	1.5	1.5
WEIGHT CHANGE, %	D 543	1.5	1.5	1.5

IF ANY SPECIMEN FAILS TO MEET THE REQUIREMENTS AT ANY TIME DURING THE 112 DAY EXPOSURE PERIOD, THE MATERIAL WILL BE SUBJECT TO REJECTION.

I. TRENCH EXCAVATION. TRENCHES FOR PVC SEWER PIPE SHALL BE EXCAVATED AND PREPARED IN ACCORDANCE WITH THE REQUIREMENTS OF SECTION 11 OF THE STANDARD SPECIFICATIONS FOR PUBLIC WORKS CONSRUCTION EXCEPT AS MODIFIED HEREIN.

(1) OVEREXCAVATION. THE MAXIMUM ALLOWABLE TRENCH WIDTH SHALL BE EQUAL TO THE OUTSIDE DIAMETER OF THE PIPE PLUS 18-INCHES FOR PIPE UP TO 12" (I.D.). IF THE TRENCH EXCAVATION EXCEEDS THE COMPUTED MAXIMUM ALLOWABLE TRENCH WIDTH WHETHER BY EXCAVATION, CAVE-IN, OR BY GROUND MOVEMENT, THE CONTRACTOR SHALL PROVIDE AT HIS OWN EXPENSE ADDITIONAL BEDDING, ANOTHER TYPE OF BEDDING, AND/OR A HIGHER STRENGTH OF PIPE DESIGNATED BY THE ENGINEER. WHERE SHORING IS REQUIRED, THE ALLOWABLE WIDTH OF THE TRENCH SHALL BE INCREASED ONLY BY THE THICKNESS OF THE SHEATHING.

J. PIPE BEDDING. WHERE UNSUITABLE MATERIAL IS ENCOUNTERED AT THE SUBGRADE AND ADDITIONAL EXCAVATION IS REQUIRED, THE VOID CREATED BY THE ADDITIONAL EXCAVATION SHALL BE FILLED AND COMPACTED WITH BEDDING MATERIAL SPECIFIED ON THE PLANS OR SPECIAL PROVISIONS. WHERE CONCRETE IS SPECIFIED TO BED THE PIPE, THE TOP OF THE CONCRETE SHALL BE CONSIDERED AS THE TOP OF THE BEDDING.

BEDDING MATERIAL SHALL CONSIST OF ONE OF THE FOLLOWING:

(1) BEACH SAND.
(2) NO. 8 OR NO. 67 AGREGATE CONFORMING TO THE GRADATION REQUIREMENTS OF ASTM C33.
(3) 3/8" FILTER AGGREGATE.
(4) NATIVE FREE-DRAINING GRANULAR MATERIAL HAVING A MINIMUM SAND EQUIVALENT OF 30 OR HAVING A COEFFICIENT OF PERMEABILITY GREATER THAN 0.001 CENTIMETER PER SECOND.
(5) OTHER MATERIAL APPROVED BY THE ENGINEER.

BEDDING MATERIAL SHALL BE PLACED SO THAT THE PIPE IS SUPPORTED FOR THE FULL LENGTH OF THE BARREL WITH FULL BEARING ON THE BOTTOM SEGMENT OF THE PIPE EQUAL TO A MINIMUM OF 0.4 TIMES THE OUTSIDE DIAMETER OF THE BARREL. IF THE PIPE IS TO BE LAID IN A ROCK EXCAVATION, THE ROCK SHALL BE REMOVED SUCH THAT NO RIBS, ROCKS, OR SOLID PROJECTIONS SHALL BE WITHIN 6 INCHES OF THE SEWER PIPE HORIZONTALLY AND THERE SHALL BE AT LEAST 4 INCHES OF BEDDING BELOW THE PIPE.

COMPACTION OF THE BEDDING FROM THE BOTTOM OF THE PIPE TO 12 INCHES ABOVE THE PIPE BARREL BY JETTING WILL BE PERMITTED PROVIDED THAT THE FOUNDATION MATERIAL WILL NOT SOFTEN OR BE OTHERWISE DAMAGED BY THE APPLIED WATER. FLOODING OR PONDING METHODS OF ACHIEVING THE REQUIRED RELATIVE DENSITY WILL NOT BE PERMITTED. THE SIZE AND LENGTH OF JET PIPE, QUANTITIES AND PRESSURE OF WATER, AND JETTING LOCATIONS SHALL BE SUFFICIENT TO COMPACT THE BEDDING TO 87% MINIMUM RELATIVE DENSITY. COMPACTION OF THE BACKFILL FROM 12 INCHES ABOVE THE PIPE BARREL TO THE FINISH SURFACE SHALL CONFORM TO THE REQUIREMENTS OF SECTION 11.4 OF THE STANDARD SPECIFICATIONS FOR PUBLIC WORKS CONSTRUCTION.

K. MANDREL TEST OF PVC PIPE. A MANDREL TEST SHALL BE PERFORMED NO SOONER THAN 30 DAYS AFTER THE TRENCH BACKFILL IS COMPLETED. IN ROADWAY AREAS THE 30-DAY PERIOD SHALL BEGIN AFTER INSTALLATION AND COMPACTION OF BEDDING, BACKFILL AND SUBBASE TO WITHIN 2 FEET OF THE FINISHED PAVEMENT GRADE. A RIGID MANDREL SHALL BE PULLED THROUGH THE PIPE BY HAND BETWEEN ADJACENT MANHOLES TO MEASURE FOR OBSTRUCTIONS (DEFLECTIONS, JOINT OFFSETS AND LATERAL PIPE INTRUSIONS). THE MANDREL SHALL HAVE A CROSS SECTION EQUIVALENT TO A CIRCLE HAVING A DIAMETER AT LEAST 95 PERCENT OF THE SPECIFIED AVERAGE INSIDE DIAMETER OF THE PIPE. THE MINIMUM LENGTH OF THE CIRCULAR PORTION OF THE MANDREL SHALL BE EQUAL TO THE NOMINAL DIAMETER OF THE PIPE. THE TEST SHALL BE PERFORMED BY THE CONTRACTOR IN THE PRESENCE OF THE ENGINEER. ALL MATERIAL, EQUIPMENT AND LABOR REQUIRED TO PERFORM THE TEST SHALL BE PROVIDED BY THE CONTRACTOR AT NO COST TO THE CITY. ANY SECTION OF PIPE THAT FAILS TO PERMIT PASSAGE OF THE MANDREL WILL NOT BE ACCEPTED UNTIL PROPERLY REPAIRED OR REPLACED AND RETESTED.

2. BEDDING FOR PVC PIPE SEWER SHALL BE CLASS "B" AS SHOWN ON S-47 OF THE STANDARD DETAILS FOR PUBLIC WORKS CONSTRUCTION UNLESS OTHERWISE NOTED.
3. THE MAXIMUM DESIGN DEFLECTION (FLATTENING) FOR PLASTIC PIPE SHALL BE 5 PERCENT. THE MAXIMUM SDR (STANDARD DIMENSION RATIO OF PIPE OUTSIDE DIAMETER TO PIPE WALL THICKNESS) SHALL BE 35.
4. SPECIAL WATERTIGHT MANHOLE COUPLINGS PER STANDARD DETAIL S-48 WILL BE REQUIRED FOR ALL MANHOLE CONNECTIONS. COUPLINGS MAY BE CAST DIRECTLY INTO CAST-IN-PLACE MANHOLES OR GROUTED INTO PRECAST CONCRETE MANHOLES WITH NON-SHRINK OR EXPANSION TYPE GROUT.
5. FOR CONNECTIONS OF PVC LATERAL SEWERS TO MAINS OF DIFFERENT MATERIALS, AN APPROVED SADDLE WYE FITTING CONSTRUCTED OF THE SAME MATERIAL AS THE MAIN LINE SHALL BE INSTALLED. CONNECTION TO THE SADDLE FITTING SHALL BE MADE BY MEANS OF AN APPROVED FLEXIBLE RUBBER COUPLING IN ACCORDANCE WITH THE COUPLING MANUFACTURER'S INSTALLATION RECOMMENDATIONS OR BY OTHER MEANS ACCEPTABLE TO THE ENGINEER.
6. PSC CONSULTANTS, LLC LETTER DATED APRIL 3, 2009, RECOMMENDS APPROVAL OF THE USE OF PVC PIPE FOR THE EAST KAPOLEI II DEVELOPMENT EAST-WEST ROAD AND ROAD "E" PROJECT.
7. PVC PIPE SHALL BE LIMITED TO USE IN AGRICULTURAL, RESIDENTIAL AND APARTMENT ZONED AREAS AND IN SIZES FROM 6 INCHES TO 12 INCHES IN DIAMETER.

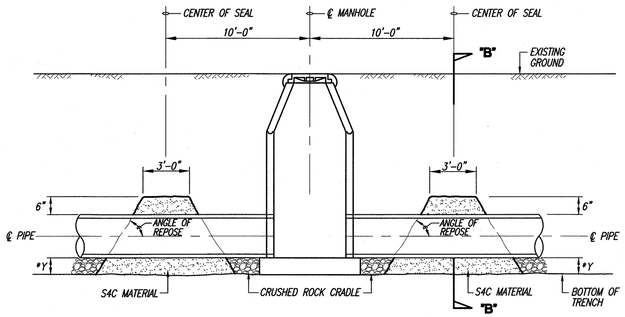

*SEE C & C STANDARD DETAILS, SHEET S-1 FOR DIMENSION OR AS SPECIFIED ON THE CONSTRUCTION PLANS

SEAL DETAIL
NOT TO SCALE

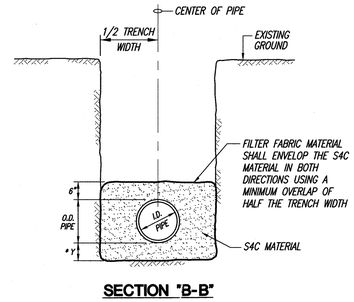

SECTION "B-B"

NOTES:

1. SEALS SHALL BE PLACED 10 FT. UPSTREAM AND DOWNSTREAM FROM EACH MANHOLE.
2. SEALS SHALL NOT BE PAID FOR SEPARATELY BUT SHALL BE CONSIDERED INCIDENTAL TO CRUSHED ROCK CRADLE.
3. THE CONTRACTOR SHALL COMPACT S4C MATERIAL BY PONDING AND DRAINING. UPON DRAINING, A VIBRATORY MACHINE SHALL BE USED UNTIL NO VISIBLE EVIDENCE OF FURTHER CONSOLIDATION EXISTS.

NOTES:

1. CLOTH BARRIER TO BE MIRAFI 140N OR APPROVED EQUAL.
2. LUMBER SIZES ARE NOMINAL INCHES.
3. 1 x 2 CLOTH BARRIER CAPS TO BE NAILED 12" O.C.
4. BURLAP IS NOT ACCEPTABLE AS THE CLOTH BARRIER.
5. CLOTH TO HAVE NO HORIZONTAL SEAMS.
6. VERTICAL SEAMS TO BE MADE OVER UPRIGHTS ONLY.
7. ALL SEAMS TO BE CAPPED WITH MINIMUM 1 x 2.
8. ALL JOINTS TO BE SECURELY FASTENED BY MECHANICAL MEANS.

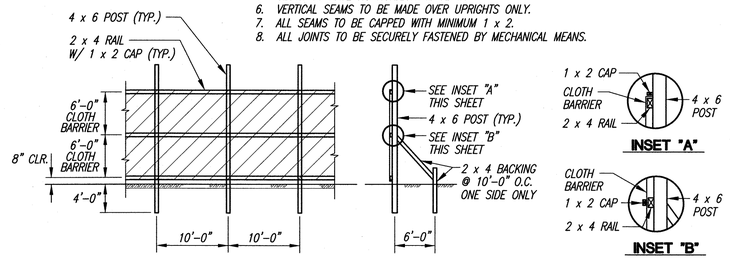

DETAIL - DUST FENCE
NOT TO SCALE

ANSON M. MURAYAMA
LICENSED PROFESSIONAL ENGINEER
No. 6975-C
HAWAII, U.S.A.

THIS WORK WAS PREPARED BY ME OR UNDER MY SUPERVISION. CONSTRUCTION OF THIS PROJECT WILL BE UNDER MY OBSERVATION. LICENSE EXPIRATION DATE: 04/30/14

REVISION DATE	DESCRIPTION	MADE BY	APPROVED

cp&e Community Planning and Engineering, Inc.
Engineering Design | Construction Management | Infrastructure Planning
1286 Queen Emma Street Honolulu, Hawaii

EAST KAPOLEI II DEVELOPMENT INCREMENT 2B

HONOULIULI, EWA, OAHU, HAWAII
(DPP SUBD. FILE NO. 2011/SUB-155)
OWNER & DEVELOPER: DEPARTMENT OF HAWAIIAN HOME LANDS
TAX MAP KEY: 9-1-17: Portion 110

GENERAL NOTES - 3

DRAWN BY: LYLT	ENGINEER: SS	CHECKED BY: AMM

APPROVED:

Scott Glushko 4/23/13
CHIEF, WASTEWATER BRANCH, D.P.P. DATE
(FOR CONFORMANCE WITH CITY STANDARDS ONLY)

DWG. NO. C-7

SHEET 8 OF 78 SHEETS

FILE	POCKET	FOLDER	NO.

P:\Land Projects\DHHL East Kapolei II\Increment I-B\Construction Drawings\Government Review #3\GENERAL NOTES - 3 GR#3.dwg, 8 GENERAL NOTES - 3, 3/13/2013 1:41:02 PM, 1:1

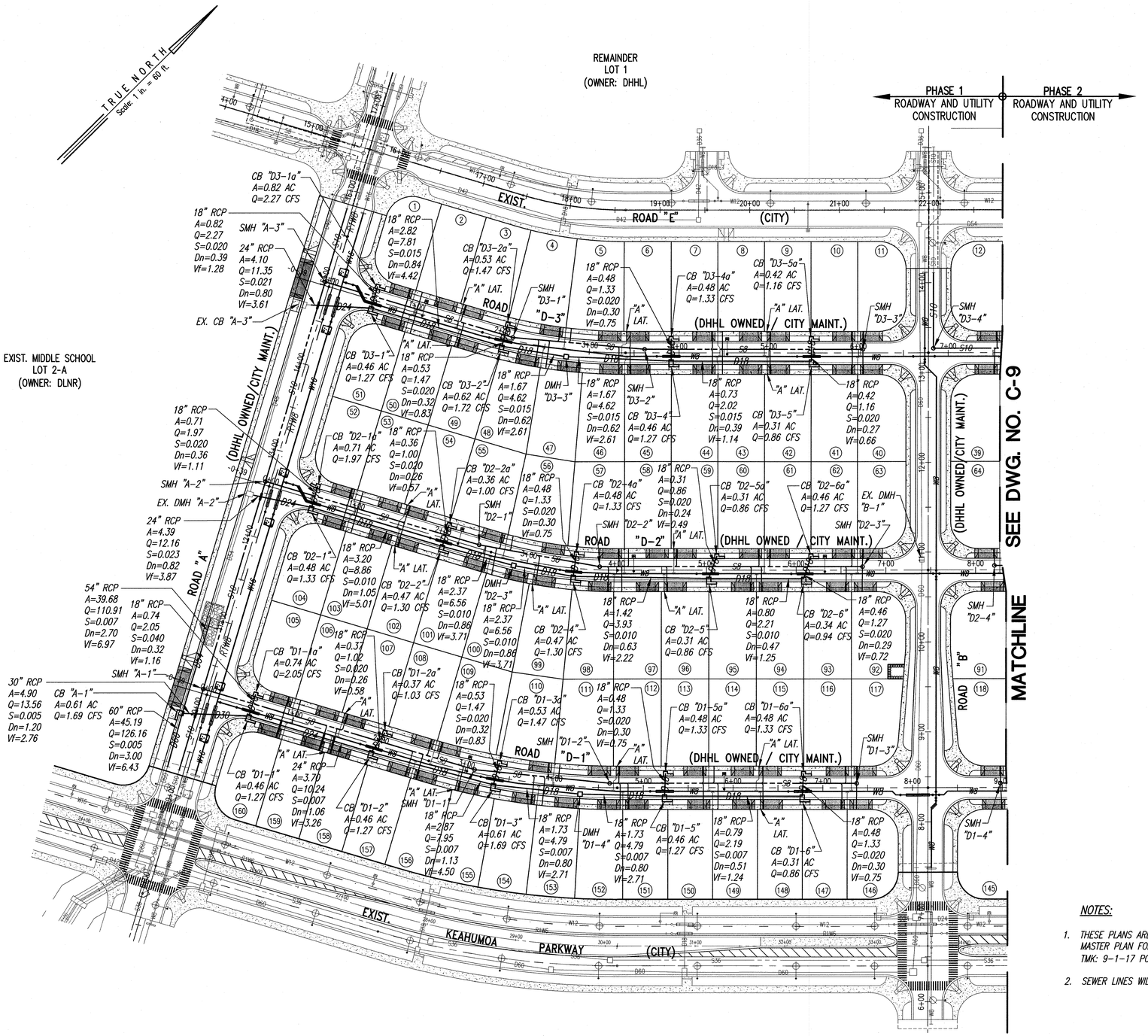

GENERAL LAYOUT PLAN - 1

SCALE: 1"=60'

60 30 0 60 120

Graphic Scale in Feet

HYDROLOGIC DESIGN DATA

Q = C I A
Q = FLOWRATE IN CFS
I = RAINFALL INTENSITY
C = RUNOFF COEFFICIENT
A = AREA IN ACRES (AC)

Tm = 10 YRS	Tm = 50 YRS
i = 1.8	i = 2.2
I = 3.96	I = 4.84
C = 0.70	C = 0.70
CI = 2.77 CFS	CI = 3.39 CFS

FOR ESTIMATING PURPOSES ONLY

DESCRIPTION OF WORK		ESTIMATE
NUMBER OF LOTS 160		
3/4" METER	@ 87+180	
INSTALLATION CHARGE PER LOT	=$267.00	
TOTAL INSTALLATION CHARGE		$42,720.00
*WATER SYSTEM FACILITIES CHARGES (WSFC) (SOURCE AND TRANSMISSION)		
(160 LOTS) 117.91/FU x MINIMUM 20 FU PER LOT =	$2358.20/LOT	
TOTAL WSFC		$377,312.00
*CREDIT		
S/N		
S/N		
IRRIGATION SERVICE (STREET TREES)		
METER		
INSTALLATION CHARGE		
WATER SYSTEM FACILITIES CHARGE		
TOTAL		$420,032.00

* CREDITS WILL BE DETERMINED WHEN THE BUILDING PERMIT APPLICATION IS SUBMITTED FOR BWS REVIEW AND APPROVAL.

THIS ESTIMATE REFLECTS ONLY THE MINIMUM CHARGES FOR THE PROJECT AND IS SUBJECT TO CHANGE. A FORMAL WRITTEN QUOTATION MAY BE OBTAINED AND ALL PAYMENTS FOR THE MINIMUM CHARGES SHOWN ON THE QUOTATION MADE WITHIN 30 DAYS AFTER THE CONSTRUCTION PLAN IS APPROVED BY BWS. HOWEVER, ACTUAL CHARGES WILL BE DETERMINED WHEN THE BUILDING PERMIT APPLICATION IS SUBMITTED FOR BWS REVIEW. ALL CHARGES IN EXCESS OF THE MINIMUM WILL ALSO BE SUBJECT TO THE 30 DAY PERIOD. IF PAYMENTS ARE NOT RECEIVED WITHIN THE 30 DAY PERIOD, THE PROJECT WILL BE SUBJECT TO THE PREVAILING RATES.

LEGEND

℄	PROPERTY LINE
DI	DRAIN INLET
CB	CATCH BASIN
DMH	DRAIN MANHOLE
RCP	REINFORCED CONCRETE PIPE
SMH	SEWER MANHOLE
A	AREA IN ACRES
Q	DRAIN RUNOFF IN CUBIC FEET PER SECOND
	DRIVEWAY
— —	CENTERLINE OF ROADWAY
D36	NEW DRAINLINE W/ SIZE
S8	NEW SEWERLINE W/ SIZE
W12	NEW WATERLINE W/ SIZE
R1W8	NEW NON-POTABLE WATERLINE W/ SIZE
D36	EXISTING DRAINLINE W/ SIZE
S8	EXISTING SEWERLINE W/ SIZE
W12	EXISTING WATERLINE W/ SIZE
R1W8	EXISTING NON-POTABLE WATERLINE W/SIZE

NOTES:

1. THESE PLANS ARE IN CONFORMANCE WITH THE "WASTEWATER MASTER PLAN FOR EAST KAPOLEI II DEVELOPMENT, TMK: 9-1-17 POR. 71 AND 88," APPROVED APRIL 22, 2009.
2. SEWER LINES WILL BE DHHL OWNED.

ANSON M. MURAYAMA
LICENSED PROFESSIONAL ENGINEER
No. 6975-C
HAWAII, U.S.A.

THIS WORK WAS PREPARED BY ME OR UNDER MY SUPERVISION. CONSTRUCTION OF THIS PROJECT WILL BE UNDER MY OBSERVATION. LICENSE EXPIRATION DATE: 04/30/14

REVISION DATE	DESCRIPTION	MADE BY	APPROVED

cp&e Community Planning and Engineering, Inc.
Engineering Design | Construction Management | Infrastructure Planning
1286 Queen Emma Street Honolulu, Hawaii

EAST KAPOLEI II DEVELOPMENT INCREMENT 2B

HONOULULI, EWA, OAHU, HAWAII
(DPP SUBD. FILE NO. 2011/SUB-155)
OWNER & DEVELOPER: DEPARTMENT OF HAWAIIAN HOME LANDS
TAX MAP KEY: 9-1-17: Portion 110

GENERAL LAYOUT PLAN - 1

DRAWN BY: LYLT	ENGINEER: SS	CHECKED BY: AMM

APPROVED:

M. Tagawa 4/28/13
CHIEF, CIVIL ENGINEERING BRANCH, D.P.P. DATE

Scott Ishii 4/23/13
CHIEF, WASTEWATER BRANCH, D.P.P. DATE
(FOR CONFORMANCE TO CITY STANDARDS ONLY)

4/16/13
CHIEF, TRAFFIC REVIEW BRANCH, D.P.P. DATE

4-29-13
MANAGER AND CHIEF ENGINEER, B.W.S. DATE
CITY & COUNTY OF HONOLULU
(FOR WORK AFFECTING BWS FACILITIES IN CITY/STATE RIGHT-OF-WAY AND BWS EASEMENTS ONLY)

DWG. NO. C-8

SHEET 9 OF 78 SHEETS

FILE	POCKET	FOLDER	NO.

P:\Land Projects\DHHL East Kapolei II\Increment I-B\Construction Drawings\Government Review #3\GENERAL LAYOUT PLAN - 1 GR#3.dwg, 9 GENERAL LAYOUT PLAN - 1, 3/13/2013 1:44:01 PM, 1:1

PHASE 1
ROADWAY AND UTILITY CONSTRUCTION

PHASE 2
ROADWAY AND UTILITY CONSTRUCTION

REMAINDER
LOT 1
(OWNER: DHHL)

MAIL BOX CENTER
SEE DWG. NO. C-20

TRUE NORTH
Scale: 1 in. = 60 ft.

EXIST. ROAD "E" (CITY)

ROAD "D-3"

ROAD "D-2"

ROAD "D-1"

ROAD "D"

(DHHL OWNED / CITY MAINT.)

SEE DWG. NO. C-8
MATCHLINE

EXIST. KEAHUMOA PARKWAY (CITY)

EXIST.
ELEMENTARY SCHOOL
LOT 4
(OWNER: DLNR)

LEGEND

PL	PROPERTY LINE
DI	DRAIN INLET
CB	CATCH BASIN
DMH	DRAIN MANHOLE
RCP	REINFORCED CONCRETE PIPE
SMH	SEWER MANHOLE
A	AREA IN ACRES
Q	DRAIN RUNOFF IN CUBIC FEET PER SECOND
	DRIVEWAY
	CENTERLINE OF ROADWAY
D36	NEW DRAINLINE W/ SIZE
S8	NEW SEWERLINE W/ SIZE
W12	NEW WATERLINE W/ SIZE
R1W8	NEW NON-POTABLE WATERLINE W/ SIZE
D36	EXISTING DRAINLINE W/ SIZE
S8	EXISTING SEWERLINE W/ SIZE
W12	EXISTING WATERLINE W/ SIZE
R1W6	EXISTING NON-POTABLE WATERLINE W/SIZE

NOTES:

1. *THESE PLANS ARE IN CONFORMANCE WITH THE "WASTEWATER MASTER PLAN FOR EAST KAPOLEI II DEVELOPMENT, TMK: 9-1-17 POR. 71 AND 88," APPROVED APRIL 22, 2009.*
2. *SEWER LINES WILL BE DHHL OWNED.*

GENERAL LAYOUT PLAN - 2

SCALE: 1" = 60'

60 30 0 60 120
Graphic Scale in Feet

ANSON M. MURAYAMA
LICENSED PROFESSIONAL ENGINEER
No. 6975-C
HAWAII, U.S.A.

THIS WORK WAS PREPARED BY ME OR UNDER MY SUPERVISION. CONSTRUCTION OF THIS PROJECT WILL BE UNDER MY OBSERVATION. LICENSE EXPIRATION DATE: 04/30/14

REVISION DATE	DESCRIPTION	MADE BY	APPROVED

cp&e
Community Planning and Engineering, Inc.
Engineering Design | Construction Management | Infrastructure Planning
1288 Queen Emma Street Honolulu, Hawaii

EAST KAPOLEI II DEVELOPMENT INCREMENT 2B

HONOULIULI, EWA, OAHU, HAWAII
(DPP SUBD. FILE NO. 2011/SUB-155)
OWNER & DEVELOPER: DEPARTMENT OF HAWAIIAN HOME LANDS
TAX MAP KEY: 9-1-17: Portion 110

GENERAL LAYOUT PLAN - 2

DRAWN BY: LYLT	ENGINEER: SS	CHECKED BY: AMM

APPROVED:

CHIEF, CIVIL ENGINEERING BRANCH, D.P.P. — DATE 4/28/13

CHIEF, WASTEWATER BRANCH, D.P.P. (FOR CONFORMANCE TO CITY STANDARDS ONLY) — DATE 4/29/13

CHIEF, TRAFFIC REVIEW BRANCH, D.P.P. — DATE 4/15/13

MANAGER AND CHIEF ENGINEER, B.W.S. — DATE 3-29-2013
CITY & COUNTY OF HONOLULU
(FOR WORK AFFECTING BWS FACILITIES IN CITY/STATE RIGHT-OF-WAY AND BWS EASEMENTS ONLY)

DWG. NO. C-9

SHEET 10 OF 78 SHEETS

FILE	POCKET	FOLDER	NO.

P:\Land Projects\DHHL East Kapolei II\Increment II-B\Construction Drawings\Government Review #3\GENERAL LAYOUT PLAN - 2 GR#3.dwg, 10 GENERAL LAYOUT PLAN - 2, 3/13/2013 1:06:40 PM, 1:1

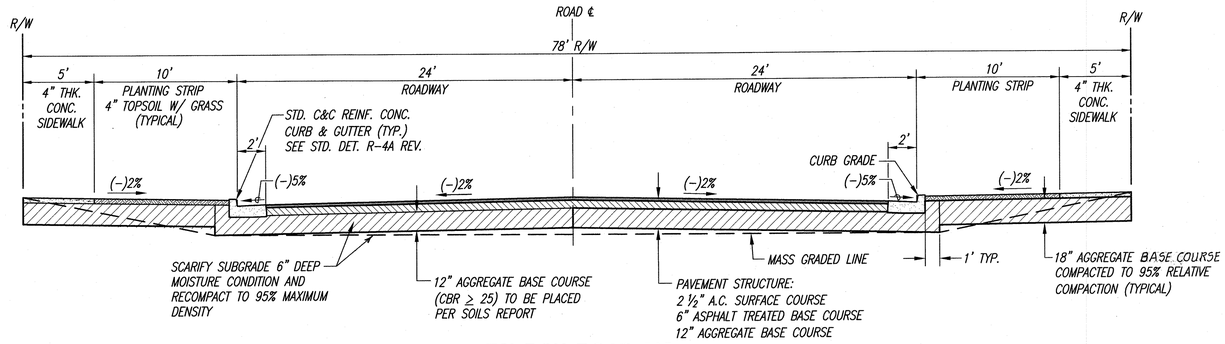

78' R/W ROAD "A"

SCALE: 1" = 5'-0"

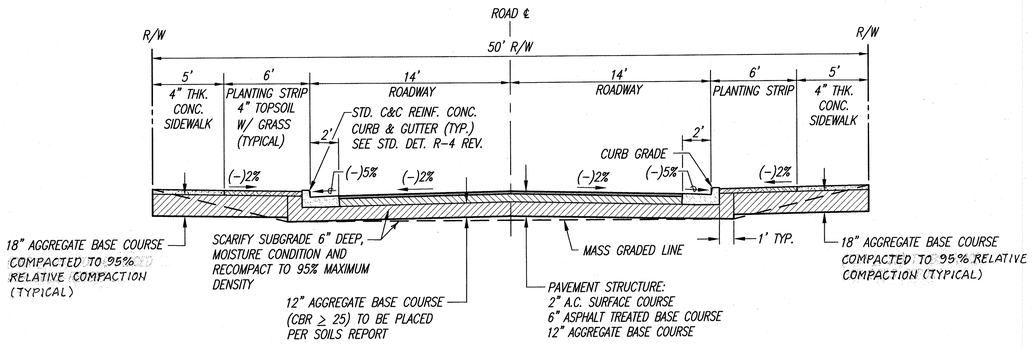

50' R/W ROAD "B"

SCALE: 1" = 5'-0"

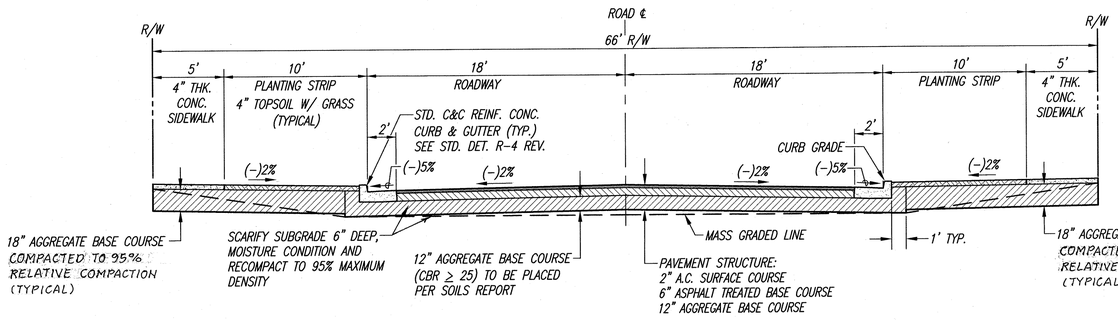

66' R/W ROAD "B"

SCALE: 1" = 5'-0"

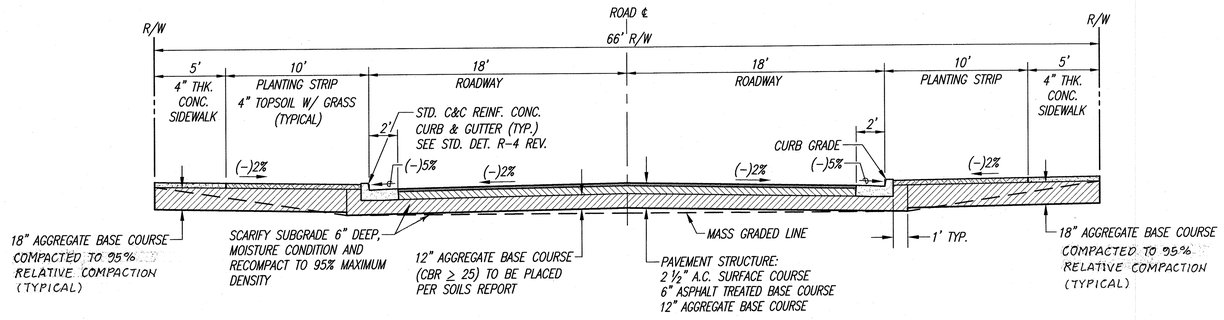

66' R/W ROAD "D"

SCALE: 1" = 5'-0"

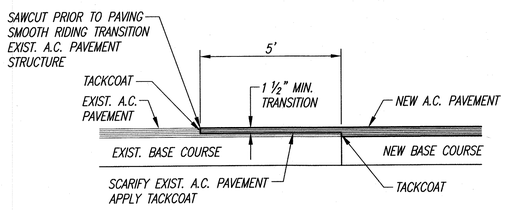

SMOOTH RIDING CONNECTION DETAIL

NOT TO SCALE

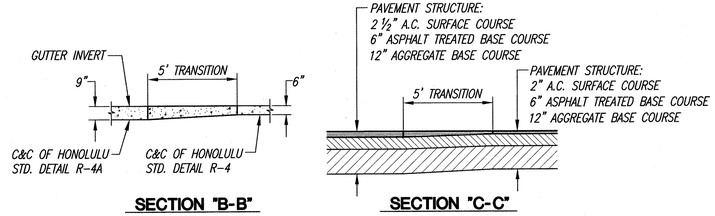

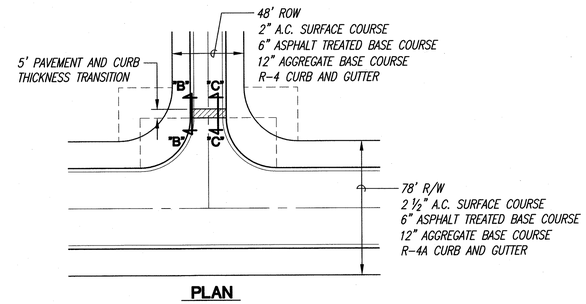

PLAN

PAVEMENT AND CURB THICKNESS TRANSITION

NOT TO SCALE

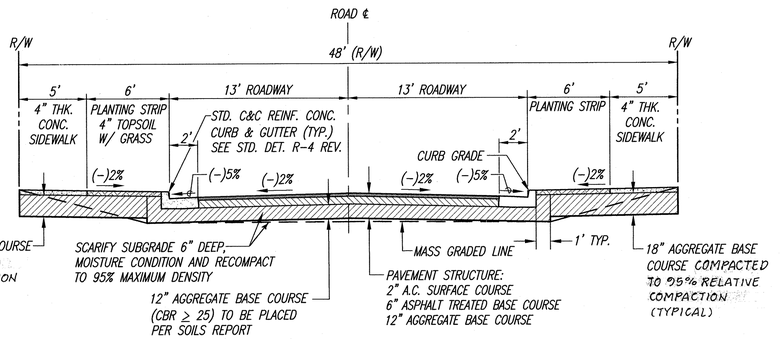

48' R/W ROADS "D-1", "D-2" & "D-3"

SCALE: 1" = 5'-0"

AGGREGATE BASE COURSE THICKNESS		
LOCATION	THICKNESS	COMMENTS
UNDER CONCRETE SIDEWALKS AND PLANTING STRIP	18"	COMPACTED TO 95% RELATIVE COMPACTION (TYPICAL)
CONCRETE DRIVEWAYS	24"	COMPACTED TO 95% RELATIVE COMPACTION (TYPICAL)
CONCRETE CURB RAMPS	24"	COMPACTED TO 95% RELATIVE COMPACTION (TYPICAL)

NOTES:

1. FOR COMPACTION REQUIREMENTS FOR PAVEMENT SECTIONS, SEE PROJECT SOILS REPORT TITLED: "REVISED PRELIMINARY GEOTECHNICAL EXPLORATION REPORT PROPOSED EAST KAPOLEI PHASE II STUDY AREA 1", HONOULIULI, EWA, OAHU, HAWAII, DATED JUNE 2009.
2. AREAS TO RECEIVE FILL (INCLUDING SELECT MATERIAL), THE GROUND SURFACE SHALL BE AT LEAST 2% ABOVE OPTIMUM MOISTURE CONTENT PRIOR TO PLACEMENT OF SUBBASE MATERIAL. IF NOT AT LEAST 2% ABOVE OPTIMUM, THEN, GROUND SURFACE SHALL BE SCARIFIED TO A DEPTH OF SIX INCHES, MOISTURE CONDITIONED TO AT LEAST 2% ABOVE OPTIMUM MOISTURE CONTENT AND RECOMPACTED.
3. AT ROADWAY AREAS, CONTRACTOR SHALL CONTINUALLY WATER SUBGRADE SO THAT SUBGRADE DOES NOT DRY OUT AND SUBGRADE MOISTURE SHALL BE AT LEAST 2% ABOVE OPTIMUM MOISTURE CONTENT PRIOR TO PLACEMENT OF BASE COURSE.
4. CONTRACTOR SHALL COMPLY WITH THE CITY AND COUNTY OF HONOLULU ENGINEERING AND POLICY MEMORANDUM NO. CEB-1-09. JOINTING REQUIREMENTS FOR CONCRETE SIDEWALKS AND DRIVEWAYS DATED APRIL 6, 2009.
5. THE 4" CONCRETE SIDEWALK SHALL BE CONSTRUCTED IN ACCORDANCE WITH THE CITY AND COUNTY STANDARD DETAIL R-28 REVISED.

ANSON M. MURAYAMA
LICENSED PROFESSIONAL ENGINEER
No. 6975-C
HAWAII, U.S.A.

THIS WORK WAS PREPARED BY ME OR UNDER MY SUPERVISION. CONSTRUCTION OF THIS PROJECT WILL BE UNDER MY OBSERVATION. LICENSE EXPIRATION DATE: 04/30/14

REVISION DATE	DESCRIPTION	MADE BY	APPROVED

cp&e **Community Planning and Engineering, Inc.**
Engineering Design | Construction Management | Infrastructure Planning
1288 Queen Emma Street Honolulu, Hawaii

EAST KAPOLEI II DEVELOPMENT INCREMENT 2B

HONOULIULI, EWA, OAHU, HAWAII
(OPP. SUBD. FILE NO. 2011/SUB-155)
OWNER & DEVELOPER: DEPARTMENT OF HAWAIIAN HOME LANDS
TAX MAP KEY: 9-1-17: Portion 110

TYPICAL ROADWAY SECTIONS

DRAWN BY: LYLT	ENGINEER: SS	CHECKED BY: AMM

APPROVED:

M. Fujii 6/28/13
CHIEF, CIVIL ENGINEERING BRANCH, D.P.P. DATE

CHIEF, PLANNING OFFICER, D.P.P. DATE

DWG. NO. **C-10** SHEET 11 OF 78 SHEETS

FILE	POCKET	FOLDER	NO.

P:\Land Projects\DHHL East Kapolei II\Increment II-B\Construction Drawings\Government Review #3\TYPICAL ROADWAY SECTIONS GR#3.dwg, 11 TYPICAL ROADWAY SECTIONS, 3/13/2013 1:47:47 PM, 1:1

P:\Land Projects\DHHL East Kapolei II\Increment II-B\Construction Drawings\Government Review #3\PLAN AND PROFILE - ROAD A GR#3.dwg, 12 PLAN AND PROFILE - ROAD A, 3/13/2013 11:15:30 AM, 1:1

STA. 9+90 o/s 4' R1W8 1-8"⅛ D.I. BEND (BV)

STA. 9+85.50 o/s 4' R1W8 1-8"⅛ D.I. BEND (TV)

STA. 9+79.50 o/s 4' R1W8 1-8" BOSSED TEE TAPPED FOR ¾" BALL CORP. 1-¾" ARV 1-ARV BOX W/ MOD. COVER SEE DET., DWG. NO. C-6

STA. 9+89 CONST. SPECIAL CB "A-1" TYPE "B" INV.=58.67–30" INV.=56.67–54" INV.=56.17–60" SEE DETAIL, DWG. NO. S-4 & S-5

CONST. 9 LF RC JACKET

CONST. 22 LF RC JACKET

STA. 10+02.50 o/s 4' R1W8 1-8"⅛ D.I. BEND (BV)

STA. 10+07.50 o/s 4' R1W8 1-8"⅛ D.I. BEND (TV)

STA. 10+16.64 ROAD "A" =STA. 0+00 ROAD "D-1" INSTALL ST. SURVEY MON. ELEV.=

STA. 10+21.64 o/s 5' CONST. SMH "A-1" INV.=56.41–8" INV.=56.24–10"

CONST. 19.50 LF RC JACKET

STA. 12+40.50 o/s 4' R1W8 1-8"⅛ D.I. BEND (BV)

STA. 12+36 o/s 4' R1W8 1-8"⅛ D.I. BEND (TV)

STA. 10+16.64 CONST. 36 LF CONC. DRWY. APRON, 6" THK.

STA. 11+03.23 o/s 19' REMOVE EXIST. CRM OUTLET CONN. TO EXIST. D54 INV.=57.47–54"

STA. 12+44.24 EXIST. DMH "A-2"* INV.=60.96–24" INV.=58.96–48" INV.=58.46–54"

CONST. 8 LF RC JACKET

STA. 12+51.50 o/s 4' R1W8 1-8"⅛ D.I. BEND (BV)

STA. 12+55.50 o/s 4' R1W8 1-8"⅛ D.I. BEND (TV)

STA. 12+58.64 ROAD "A" =STA. 0+00 ROAD "D-2" INSTALL ST. SURVEY MON. ELEV=

CONST. 23 LF RC JACKET

CONST. 8 LF RC JACKET

STA. 14+63* EXIST. CB "A-3" INV.=62.49–24" INV.=60.99–42" INV.=60.49–48"

STA. 14+64.50 o/s 4' R1W8 1-8"⅛ D.I. BEND (BV)

STA. 14+59.50 o/s 4' R1W8 1-8"⅛ D.I. BEND (TV)

STA. 14+76.50 o/s 4' R1W8 1-8"⅛ D.I. BEND (BV)

STA. 14+82.50 o/s 4' R1W8 1-8"⅛ D.I. BEND (TV)

STA. 14+90.38 CONST. 36 LF CONC. DRWY. APRON, 6" THK.

STA. 14+90.38 ROAD "A" =STA. 0+00 ROAD "D-3" INSTALL ST. SURVEY MON. ELEV.=

STA. 14+94.33 o/s 5' CONST. SMH "A-3" INV.=60.81–8" INV.=60.65–10"

STA. 15+50 o/s 4' R1W8 1-8" GV, CL. 150 1-GV BOX W/ MODIFIED COVER SEE DET., DWG. NO. C-6 1-GV ANCHOR BLK.

EXIST. 10' WIDE SEWER EASEMENT IN FAVOR OF DHHL (2010/SUB-115)

EXIST. CB "E-3" INV.=66.52–18"

EXIST. CB "E-3a" INV.=67.25–18"

STA. 16+33.51 EXIST. DMH "E-4" INV.=66.03–18" INV.=64.53–36" INV.=64.03–42"

STA. 16+49.34 ROAD "A" =STA. 15+67.49 ROAD "E" EXIST. ST. SURVEY MON. ELEV.=

EXIST. 10" PVC SEWER CONSTRUCTED UNDER: EAST KAPOLEI II DEVELOPMENT ROAD "E" (DPP SUBD. FILE NO. 2010/SUB-115) (2010/CP-193)

STA. 15+79.12 o/s 5.5' REMOVE 10" PLUG CONN. TO EXIST. S10 INV.=61.29

STA. 15+79.12 o/s 4' CONNECT TO EXIST. R1W8 1-8" SLEEVE, 12" LONG 12 LF, 8" PVC PIPE, CL. 150 TEMP. FOR TESTING: 1-8" PLUG W/ 2 ½" C.O. 1-CONC. BLOCK

STA. 15+79.12 o/s 3.5' CONNECT TO EXIST. W16 1-16" D.I. SLEEVE, 15" LONG 12 LF 16" PVC PIPE, CL. 150 TEMP. FOR TESTING: 1-16" CAP W/ 4" C.O. 1-CONC. BLK.

TRUE NORTH
Scale: 1 in. = 40 ft.

1 STA. 9+69.50 o/s 13.5' 1-16" BGGV, CL. 150, FE 1-16" DISMANTLING JT., FE 1-TYPE "A" MH MODIFIED (HT.=6.0') 2-CAPPING COLLARS (16")

2 STA. 10+30 o/s 13.5' 1-16" BGGV, CL. 150, FE 1-16" DISMANTLING JT., FE 1-TYPE "A" MH MODIFIED (HT.=7.0') 2-CAPPING COLLARS (16")

3 STA. 12+20 o/s 13.5' 1-16" BGGV, CL. 150, FE 1-16" DISMANTLING JT., FE 1-TYPE "A" MH MODIFIED (HT.=6.0') 2-CAPPING COLLARS (16")

4 STA. 12+78 o/s 13.5' 1-16" BGGV, CL. 150, FE 1-16" DISMANTLING JT., FE 1-TYPE "A" MH MODIFIED (HT.=7.0') 2-CAPPING COLLARS (16")

5 STA. 14+43.50 o/s 13.5' 1-16" BGGV, CL. 150, FE 1-16" DISMANTLING JT., FE 1-TYPE "A" MH MODIFIED (HT.=6.0') 2-CAPPING COLLARS (16")

6 STA. 15+10 o/s 13.5' 1-16" BGGV, CL. 150, FE 1-16" DISMANTLING JT., FE 1-TYPE "A" MH MODIFIED (HT.=7.0') 2-CAPPING COLLARS (16")

7 STA. 12+30 o/s 4' R1W8 1-8" BOSSED TEE TAPPED FOR ¾" BALL CORP. 1-¾" ARV 1-ARV BOX W/ MODIFIED COVER SEE DET., DWG. NO. C-6

8 STA. 12+62.64 o/s 5' CONST. SMH "A-2" INV.=58.66–8" INV.=58.49–10"

9 STA. 14+53.50 o/s 4' R1W8 1-8" BOSSED TEE TAPPED FOR ¾" BALL CORP. 1-¾" ARV 1-ARV BOX W/ MODIFIED COVER SEE DET., DWG. NO. C-6

10 STA. 9+22.66 & STA. 15+84.28 REMOVE EXIST. CONC. HEADER AND TEMPORARY WOODEN BARRICADE. CONNECT TO AND MATCH EXIST. ELEVATION AT CONC. SIDEWALK, CURB AND GUTTERS. SEE CONNECTION DETAIL, DWG. NO. C-5 PROVIDE 5' WIDE SMOOTH RIDING CONNECTION TO EXIST. PAVEMENT. SEE DETAIL, DWG. NO. C-10

11 EXIST. SMH "E-2" CONSTRUCTED UNDER: EAST KAPOLEI II DEVELOPMENT ROAD "E" (DPP SUBD. FILE NO. 2010/SUB-115) (2010/CP-193) INV.=61.94–8" INV.=61.78–10"

12 EXIST. SMH "EW-7" CONSTRUCTED UNDER: EAST KAPOLEI II DEVELOPMENT EAST–WEST ROAD AND ROAD "E" (DPP SUBD. FILE NO. 2008/SUB-21) (2008/CP-82) INV.=56.27–10" INV.=51.07–12" INV.=50.57–18"

PUBLIC SEWER | PRIVATE SEWER

24+72.36 KEAHUMOA PARKWAY o/s 31.3' EX. DMH "EW-12a" INV.=58.56–24" INV.=55.60–60"

EXIST. ST. SURVEY MON. STA. 8+18.66 ROAD "A" =STA. @ 25+17.37 KEAHUMOA PARKWAY ELEV.=

EXIST. KEAHUMOA PARKWAY (CITY)

EXIST. ROAD "E" (CITY)

ROAD "A" (DHHL OWNED/CITY MAINTAINED)

ROAD "D-1" (DHHL OWNED/CITY MAINTAINED) SEE DWG. NO. C-14

ROAD "D-2" (DHHL OWNED/CITY MAINTAINED) SEE DWG. NO. C-16

ROAD "D-3" (DHHL OWNED/CITY MAINTAINED) SEE DWG. NO. C-18

EXIST. 10" PVC SEWER CONSTRUCTED UNDER: EAST KAPOLEI II DEVELOPMENT EAST–WEST ROAD AND ROAD "E" (DPP SUBD. FILE NO. 2008/SUB-21) (2008/CP-82)

INTERSECTION STA. 8+40.66 ROAD "A" =STA. 24+91.34 KEAHUMOA PARKWAY

STA. 9+31 o/s 4' R1W8 1-8" PVC DEFL. COUPLING (V)

STA. 9+27.66 o/s 13.5' CONNECT TO EXIST. W16 1-16" D.I. SLEEVE, 15" LONG 12 LF 16" PVC PIPE, CL. 150 TEMP. FOR TESTING: 1-16" CAP W/ 4" C.O. 1-CONC. BLK.

STA. 9+27.66 o/s 19' REMOVE CMP RISER CONNECT TO EXIST. D60 INV.=55.85±–60"

STA. 9+27.66 o/s 5' REMOVE 10" PLUG CONN. TO EXIST. S10 INV.=55.87±–10"

STA. 9+27.66 o/s 4' CONN. TO EXIST. R1W8 1-8" SLEEVE, 12" LONG 12 LF, 8" PVC PIPE, CL. 150 TEMP. FOR TESTING: 1-8" PLUG W/ 2 ½" C.O. 1-CONC. BLK.

STA. 9+61.50 o/s 13.5' 1-16" D.I. SLEEVE DEFL. (V)

STA. 9+79.50 o/s 13.5' 1-16" D.I. SLEEVE TAPPED FOR ¾" BALL CORP. 1-¾" ARV (WP=67.28 PSI) 1-ARV BOX

STA. 9+85.50 o/s 13.5' 1-16"⅛ BEND (TV)

STA. 9+90 o/s 13.5' 1-16"⅛ BEND (BV)

CONST. 22 LF RC JACKET

STA. 10+02.50 o/s 13.5' 1-16"⅛ BEND (BV)

STA. 10+07.50 o/s 13.5' 1-16"⅛ BEND (TV)

CB "D1-1" INV.=59.55–18" INV.=59.55–24" INV.=59.05–30"

STA. 10+12.64 o/s 13.5' 16"x8" TEE, DI 1-8" GV, CL. 150 1-VALVE BOX 1-GV ANCHOR BLK. 1-CONC. BLK.

STA. 10+38 o/s 13.5' 1-16" D.I. SLEEVE DEFL. (V)

CB "D1-1a" INV.=60.54–18"

STA. 12+12 o/s 13.5' 1-16" D.I. SLEEVE DEFL. (V)

STA. 12+30 o/s 13.5' 1-16" D.I. SLEEVE TAPPED FOR ¾" BALL CORP. 1- ¾" ARV (WP=66.2 PSI) 1-ARV BOX

STA. 12+36 o/s 13.5' 1-16"⅛ BEND (TV)

STA. 12+40.50 o/s 13.5' 1-16"⅛ BEND (BV)

CONST. 21 LF RC JACKET

CB "D2-1" INV.=63.12–18" INV.=62.62–24"

STA. 12+57 o/s 13.5' 1-16"⅛ BEND (TV)

STA. 12+51.50 o/s 13.5' 1-16"⅛ BEND (BV)

STA. 12+86 o/s 13.5' 1-16" D.I. SLEEVE DEFL. (V)

STA. 12+68 o/s 13.5' 16"x8" TEE, DI 1-8" GV, CL. 150 1-VALVE BOX 1-GV ANCHOR BLK. 1-CONC. BLK.

CB "D2-1a" INV.=63.61–18"

STA. 14+35.50 o/s 13.5' 1-16" D.I. SLEEVE DEFL. (V)

STA. 14+53.50 o/s 13.5' 1-16" D.I. SLEEVE TAPPED FOR ¾" BALL CORP. 1- ¾" ARV (WP=65.4 PSI) 1-ARV BOX

STA. 14+59.50 o/s 13.5' 1-16"⅛ BEND (TV)

STA. 14+64.50 o/s 13.5' 1-16"⅛ BEND (BV)

CONST. 22.50 LF RC JACKET

CB "D3-1" INV.=64.61–18" INV.=64.11–24"

STA. 14+82 o/s 13.5' 1-16"⅛ BEND (TV)

STA. 14+76.50 o/s 13.5' 1-16"⅛ BEND (BV)

STA. 15+18 o/s 13.5' 1-16" D.I. SLEEVE DEFL. (V)

STA. 15+00 o/s 13.5' 16"x8" TEE, DI 1-8" GV, CL. 150 1-VALVE BOX 1-GV ANCHOR BLK. 1-CONC. BLK.

CB "D3-1a" INV.=65.11–18"

*CONSTRUCTED UNDER: EAST KAPOLEI II DEVELOPMENT ROAD "E" (DPP SUBD. FILE NO. 2010/SUB-115) (2010/CP-193) REMOVE SILT FENCE & WIREMESH COVER CONSTRUCT TOP SLAB SEE DET., DWG. NO. S-2 & S-3

PLAN
SCALE: 1"=40'

PROFILE
SCALES: HORIZ. 1"=40' VERT. 1"= 4'

MATCHLINE STA. 11+00

SEWER DATA
QR=0.61 MGD
QA=0.78 MGD
VR=2.46 fps
VA=2.20 fps
S=0.0040 ft/ft
n=0.015

SEWER DATA
QR=0.58 MGD
QA=1.18 MGD
VR=3.37 fps
VA=3.36 fps
S=0.0093 ft/ft
n=0.015

SEWER DATA
QR=0.55 MGD
QA=1.18 MGD
VR=3.31 fps
VA=3.36 fps
S=0.0093 ft/ft
n=0.015

SEWER DATA
QR=0.52 MGD
QA=1.07 MGD
VR=3.01 fps
VA=3.04 fps
S=0.0076 ft/ft
n=0.015

LEGEND

———	CENTERLINE
— — —	PROPERTY LINE
W16	WATER LINE W/ SIZE
R1W8	NON-POTABLE WATER W/ SIZE
D18	DRAIN LINE W/ SIZE
S8	SEWER LINE W/ SIZE
ER1W8	EXIST. NON-POTABLE WATER W/ SIZE
EW16	EXIST. WATER LINE W/ SIZE
ED18	EXIST. DRAIN LINE W/ SIZE
ES36	EXIST. SEWER LINE W/ SIZE
DC	DEFLECTION COUPLING
CP	CONNECTOR PIECE

Horizontal: 40 20 0 40 80
Vertical: 4 3 2 1 0 4 8
Graphic Scale in Feet

REVISION DATE	DESCRIPTION	MADE BY	APPROVED

cp&e Community Planning and Engineering, Inc.
Engineering Design | Construction Management | Infrastructure Planning
1286 Queen Emma Street Honolulu, Hawaii

EAST KAPOLEI II DEVELOPMENT INCREMENT 2B

HONOULIULI, EWA, OAHU, HAWAII
(DPP SUBD. FILE NO. 2011/SUB-155)
OWNER & DEVELOPER: DEPARTMENT OF HAWAIIAN HOME LANDS
TAX MAP KEY: 9-1-17: Portion 110

PLAN AND PROFILE ROAD "A"

DRAWN BY: LYLT | ENGINEER: SS | CHECKED BY: AMM

APPROVED:

CHIEF, CIVIL ENGINEERING BRANCH, D.P.P. — DATE 4/28/13

CHIEF, TRAFFIC REVIEW BRANCH, D.P.P. — DATE 4/15/13

Scott Grashi — DATE 4/23/13
CHIEF, WASTEWATER BRANCH, D.P.P. (FOR CONFORMANCE TO CITY STANDARDS ONLY)

MANAGER AND CHIEF ENGINEER, B.W.S. — DATE 3-28-13
BOARD OF WATER SUPPLY, CITY & COUNTY OF HONOLULU
(THE WORK AFFECTING BWS FACILITIES IN CITY/STATE RIGHT-OF-WAY AND BWS EASEMENTS ONLY)

LICENSED PROFESSIONAL ENGINEER No. 6975-C ANSON M. MURAYAMA HAWAII, U.S.A.

THIS WORK WAS PREPARED BY ME OR UNDER MY SUPERVISION. CONSTRUCTION OF THIS PROJECT WILL BE UNDER MY OBSERVATION. LICENSE EXPIRATION DATE: 04/30/14

DWG. NO. C-11

SHEET 12 OF 78 SHEETS

FILE	POCKET	FOLDER	NO.

INTERSECTION
STA. 6+62.01 ROAD "B"
=STA. 33+59.52 KEAHUMOA PARKWAY

EXIST. ST. SURVEY MON.
STA. 6+40.01 ROAD "B"
=STA. @ 33+91.91 KEAHUMOA PARKWAY
ELEV.=

EXIST. KEAHUMOA PARKWAY (CITY)

EXIST. DMH "E-17a"
INV.=63.30-24"
INV.=60.91-60"

ROAD "D-1" (DHHL OWNED/CITY MAINTAINED) SEE DWG. NO. C-14

STA. 10+80 ROAD "B"
=STA. 7+47.15 ROAD "D-2"
INSTALL ST. SURVEY MON.
ELEV.=

STA. 10+69.50 o/s 9'
1-8" D.I. BOSSED TEE TAPPED FOR ¾" BALL CORP.
1- ¾" ARV (WP=62.7 PSI)
1-ARV BOX

224°43' 346.18' (MON. TO MON.)

STA. 8+38 ROAD "B"
=STA. 8+17.19 ROAD "D-1"
INSTALL ST. SURVEY MON.
ELEV.=

STA. 8+92 BEGIN ROAD TRANSITION

STA. 9+92 END ROAD TRANSITION

ROAD "D-2" (DHHL OWNED/CITY MAINTAINED) SEE DWG. NO. C-16

224°43' 346.19' (MON. TO MON.)

STA. 10+91.31 o/s 7'
EXIST. DMH "B-1"
CONSTRUCTED UNDER:
EAST KAPOLEI II DEVELOPMENT ROAD "E"
(DPP SUBD. FILE NO. 2010/SUB-115)
(2010/CP-193)
INV.=63.29-60"
REMOVE SILT FENCE & WIRE MESH COVER
CONSTRUCT TOP SLAB
SEE DET., DWG. NO. S-2

STA. 13+08 o/s 4'
1-8" ⅛ BEND (H&TV)
1-CONC. BLK.

STA. 13+11.50 o/s 4'
1-8" D.I. BOSSED TEE TAPPED FOR ¾" BALL CORP.
1- ¾" ARV (WP=60.9 PSI)
1-ARV BOX

ROAD "D-3" (DHHL OWNED/CITY MAINTAINED) SEE DWG. NO. C-18

224°43' 346.19' (MON. TO MON.)

STA. 13+27 o/s 4'
1-8" GV, CL. 150
1-VALVE BOX
1-GV ANCHOR BLK.

EXIST. ROAD "E" (CITY)

STA. 14+11 o/s 4'
CONNECT TO EXIST. W8
1-8" D.I. SLEEVE, 12" LONG
12 LF 8" PVC PIPE, CL. 150
TEMP. FOR TESTING:
1-8" D.I. PLUG W/ 2 ½" C.O.
1-CONC. BLK.

EXIST. DMH "E-7"
INV.=70.44-36"
INV.=67.53-54"
INV.=67.03-60"

STA. 14+81 ROAD "B"
=STA. 21+99.45 ROAD "E"
EXIST. ST. SURVEY MON.
ELEV.=

EXIST. CB "B-2"
INV.=76.11-18"
INV.=71.00-36"

EXIST. 10' WIDE SEWER EASEMENT IN FAVOR OF DHHL (2010/SUB-115)

EXIST. CB "B-2a"
INV.=76.65-18"

TRUE NORTH
Scale: 1 in. = 40 ft.

(DHHL OWNED/CITY MAINTAINED)

ROAD "B"

STA. 7+44.01
REMOVE EXIST. CONC. HEADER AND TEMPORARY WOODEN BARRICADE.
CONNECT TO AND MATCH EXIST. ELEVATION AT CONC. SIDEWALK, CURB AND GUTTERS. SEE CONNECTION DETAIL, DWG. NO. C-5
PROVIDE 5' WIDE SMOOTH RIDING CONNECTION TO EXIST. PAVEMENT.
SEE DETAIL, DWG. NO. C-10

134°43' 197.99' (MON. TO MON.)

STA. 7+48.98 o/s 4'
CONNECT TO EXIST. W8
1-8" D.I. SLEEVE, 12" LONG
12 LF 8" PVC PIPE, CL. 150
TEMP. FOR TESTING:
1-8" D.I. PLUG W/ 2 ½" C.O.
1-CONC. BLK.

STA. 8+15 o/s 4'
1-8" ⅛ BEND (H&TV)

CONST. 7 LF RC JACKET

STA. 8+20 o/s 9'
1-8" ⅛ BEND (H)

STA. 8+23.50 o/s 9'
1-8" D.I. BOSSED TEE TAPPED FOR ¾" BALL CORP.
1- ¾" ARV (WP=64.6 PSI)
1-ARV BOX

ROAD "D-1" (DHHL OWNED/CITY MAINTAINED) SEE DWG. NO. C-15

134°43' 242.00' (MON. TO MON.)

STA. 8+30 o/s 9'
8" CROSS, DI
4-8" GV, CL. 150
4-VALVE BOXES
4-GV, ANCHOR BLKS.

224°43' 797.99' (MON. TO MON.)

STA. 10+76 o/s 9'
8" CROSS, DI
4-8" GV, CL. 150
4-VALVE BOXES
4-GV ANCHOR BLKS.

ROAD "D-2" (DHHL OWNED/CITY MAINTAINED) SEE DWG. NO. C-17

224°43' 798.00' (MON. TO MON.)

STA. 12+95 o/s 9'
1-8" ⅛ BEND (H)
1-CONC. BLK.

STA. 13+18 o/s 4'
8" CROSS, DI
1-8" GV, CL. 150
1-VALVE BOX
1-GV ANCHOR BLK.

STA. 13+22 ROAD "B"
=STA. 6+77.98 ROAD "D-3"
INSTALL ST. SURVEY MON.
ELEV.=

ROAD "D-3" (DHHL OWNED/CITY MAINTAINED) SEE DWG. NO. C-19

134°43' 159.00' (MON. TO MON.)

STA. 13+27 o/s 6'
CONST. SMH "D3-4"
INV.=72.07-10"
INV.=71.03-10"

224°43' 798.00' (MON. TO MON.)

STA. 14+11 o/s 6'
CONNECT TO EXIST. S10
AT SAME ALIGNMENT AND GRADE
REMOVE PLUG AND MARKER

EXIST. 10" PVC SEWER CONSTRUCTED UNDER:
EAST KAPOLEI II DEVELOPMENT ROAD "E"
(DPP SUBD. FILE NO. 2010/SUB-115)
(2010/CP-193)

STA. 14+16
REMOVE EXIST. CONC. HEADER AND TEMPORARY WOODEN BARRICADE.
CONNECT TO AND MATCH EXIST. ELEVATION AT CONC. SIDEWALK, CURB AND GUTTERS. SEE CONNECTION DETAIL, DWG. NO. C-5
PROVIDE 5' WIDE SMOOTH RIDING CONNECTION TO EXIST. PAVEMENT.
SEE DETAIL, DWG. NO. C-10

LEGEND

——·——	CENTERLINE
——·——	PROPERTY LINE
W16	WATER LINE W/ SIZE
D18	DRAIN LINE W/ SIZE
S8	SEWER LINE W/ SIZE
ER1W8	EXIST. NON-POTABLE WATER W/ SIZE
EW16	EXIST. WATER LINE W/ SIZE
ED18	EXIST. DRAIN LINE W/ SIZE
ES36	EXIST. SEWER LINE W/ SIZE
DC	DEFLECTION COUPLING
CP	CONNECTOR PIECE

PLAN
SCALE: 1"=40'

PROFILE
SCALES: HORIZ. 1"=40'
VERT. 1"= 4'

FINISHED CURB GRADE
EXIST. 60" RCP @ 0.60%
EXIST. 60" RCP @ 1.00%
10" PVC C=900 SEWER 84 LF @ 0.88%
EXIST. 10" PVC SEWER @ 0.88%
EXIST. 36" RCP @ 0.88%

SEWER DATA
QR=0.11 MGD
QA=1.15 MGD
VR=2.18 fps
VA=3.27 fps
S=0.0088 ft/ft
n=0.015

Horizontal 40 20 0 40 80
Vertical 4 3 2 1 0 4 8
Graphic Scale in Feet

REVISION DATE	DESCRIPTION	MADE BY	APPROVED

cp&e Community Planning and Engineering, Inc.
Engineering Design | Construction Management | Infrastructure Planning
1286 Queen Emma Street Honolulu, Hawaii

EAST KAPOLEI II DEVELOPMENT INCREMENT 2B
HONOULIULI, EWA, OAHU, HAWAII
(DPP SUBD. FILE NO. 2011/SUB-155)
OWNER & DEVELOPER: DEPARTMENT OF HAWAIIAN HOME LANDS
TAX MAP KEY: 9-1-17: Portion 110

PLAN AND PROFILE ROAD "B"

DRAWN BY: LYLT | ENGINEER: SS | CHECKED BY: AMM

APPROVED:
CHIEF, CIVIL ENGINEERING BRANCH, D.P.P. — DATE 6/28/13
CHIEF, WASTEWATER BRANCH, D.P.P. — DATE 4/23/13 (FOR CONFORMANCE TO CITY STANDARDS ONLY)
CHIEF, TRAFFIC REVIEW BRANCH, D.P.P. — DATE 4/15/13
MANAGER AND CHIEF ENGINEER, B.W.S. — DATE 9-26-13 (FOR WORK AFFECTING BWS FACILITIES IN CITY/STATE RIGHT-OF-WAY AND BWS EASEMENTS ONLY)

ANSON M. MURAYAMA LICENSED PROFESSIONAL ENGINEER No. 6975-C HAWAII, U.S.A.

THIS WORK WAS PREPARED BY ME OR UNDER MY SUPERVISION. CONSTRUCTION OF THIS PROJECT WILL BE UNDER MY OBSERVATION. LICENSE EXPIRATION DATE: 04/30/14

DWG. NO. C-12 SHEET 13 OF 78 SHEETS

FILE	POCKET	FOLDER	NO.

P:\Land Projects\DHHL East Kapolei II\Increment I-B\Construction Drawings\Government Review #3\PLAN AND PROFILE - ROAD B GR#3.dwg, PLAN AND PROFILE - ROAD B, 3/13/2013 1:01:33 PM, 1:1

P:\Land Projects\DHHL East Kapolei II\Increment II-B\Construction Drawings\Government Review #3\PLAN AND PROFILE - ROAD D GR#3.dwg, PLAN AND PROFILE - ROAD D, 3/20/2013 8:58:17 AM, 1:1

STA. 8+78 o/s 8'
1-12"⅛ D.I. BEND (BV)

STA. 8+73.55 o/s 8'
1-12"⅛ D.I. BEND (TV)

STA. 8+64 o/s 8'
1-12" D.I. BOSSED TEE TAPPED FOR ¾" BALL CORP.
1- ¾" ARV (WP=66.8 PSI)
1-ARV BOX

STA. 8+42 o/s 8'
1-12" D.I. DEFL. COUPLING (V)

CB "D1-11"
INV.=61.66-18"
INV.=61.16-24"

STA. 8+17.56 o/s 8'
CONNECT TO EXIST. W12
1-12" D.I. SLEEVE, 12" LONG
12 LF 12" PVC PIPE, CL. 150
TEMP. FOR TESTING:
1-12" CAP W/ 4" C.O.
1-CONC. BLK.

STA. 8+12.56
REMOVE EXIST. CONC. HEADER AND TEMPORARY WOODEN BARRICADE. CONNECT TO AND MATCH EXIST. ELEVATION AT CONC. SIDEWALK, CURB AND GUTTERS. SEE CONNECTION DETAIL, DWG. NO. C-5
PROVIDE 5' WIDE SMOOTH RIDING CONNECTION TO EXIST. PAVEMENT. SEE DETAIL, DWG. NO. C-10

STA. 8+17.56 o/s 4'
CONNECT TO EXIST. S10 AT SAME ALIGNMENT AND GRADE, REMOVE PLUG AND MARKER

EXIST. ST. SURVEY MON.
STA. 7+08.56 RD. "D"
=STA. @ 41+89.92 HEAHUMOA PARKWAY
ELEV.=

STA. 7+01.86 o/s 13.30
EXIST. DMH "EW-21"
INV.=58.61-24"
INV.=57.61-36"

EXIST. SMH "EW-13"
CONSTRUCTED UNDER:
EAST KAPOLEI II DEVELOPMENT
EAST-WEST ROAD AND ROAD "E"
(DPP SUBD. FILE NO. 2008/SUB-21)
(2008/CP-82)
INV.=56.29-10"
INV.=53.27-12"
INV.=51.30-36"

EXIST. KEAHUMOA PARKWAY (CITY)

INTERSECTION
STA. 7+30.56 ROAD "D"
=STA. 41+57.51 KEAHUMOA PKWY.

EXIST. 10" PVC SEWER
CONSTRUCTED UNDER:
EAST KAPOLEI II DEVELOPMENT
EAST-WEST ROAD AND ROAD "E"
(DPP SUBD. FILE NO. 2008/SUB-21)
(2008/CP-82)

PUBLIC SEWER | PRIVATE SEWER

ROAD "D-1" (DHHL OWNED/CITY MAINTAINED) SEE DWG. NO. C-15

CB "D1-11a"
INV.=62.15-18"

224°43' 797.99' (MON. TO MON.)

ROAD "D-2" (DHHL OWNED/CITY MAINTAINED) SEE DWG. NO. C-17

CB "D2-11"
INV.=65.95-18"
INV.=65.45-24"

CONST. 20 LF RC JACKET

STA. 11+20 o/s 8'
1-12"⅛ D.I. BEND (BV)

STA. 11+16 o/s 8'
1-12"⅛ D.I. BEND (TV)

STA. 11+09 o/s 8'
1-12" D.I. BOSSED TEE TAPPED FOR ¾" BALL CORP.
1- ¾" ARV (WP=64.5 PSI)
1-ARV BOX

224°43' 798.00' (MON. TO MON.)

CB "D2-11a"
INV.=66.45-18"

ROAD "D-3" (DHHL OWNED/CITY MAINTAINED) SEE DWG. NO. C-19

CB "D3-10"
INV.=70.24-18"
INV.=69.74-24"

STA. 13+51 o/s 8'
1-12" D.I. BOSSED TEE TAPPED FOR ¾" BALL CORP.
1- ¾" ARV (WP=62.6 PSI)
1-ARV BOX

224°43' 798.00' (MON. TO MON.)

CB "D3-10a"
INV.=70.73-18"

(DHHL OWNED/CITY MAINTAINED)

ROAD "D"

EXIST. ROAD "E" (CITY)

STA. 14+79.41 o/s 8'
CONNECT TO EXIST. W12
1-12" D.I. SLEEVE, 12" LONG
12 LF 12" PVC PIPE, CL. 150
TEMP. FOR TESTING:
1-12" CAP W/ 4" C.O.
1-CONC. BLK.

STA. 14+84.41
REMOVE EXIST. CONC. HEADER AND TEMPORARY WOODEN BARRICADE. CONNECT TO AND MATCH EXIST. ELEVATION AT CONC. SIDEWALK, CURB AND GUTTERS. SEE CONNECTION DETAIL, DWG. NO. C-5
PROVIDE 5' WIDE SMOOTH RIDING CONNECTION TO EXIST. PAVEMENT. SEE DETAIL, DWG. NO. C-10

EXIST. DMH "E-10"
INV.=69.92-42"
INV.=69.42-48"
INV.=68.92-54"

STA. 15+49.55 ROAD "D"
=STA. 29+97.47 ROAD "E"
EXIST. ST. SURVEY MON.
ELEV.=

EXIST. 10' WIDE SEWER EASEMENT IN FAVOR OF DHHL (2010/SUB-115)

EXIST. SMH "E-3"
CONSTRUCTED UNDER:
EAST KAPOLEI II DEVELOPMENT ROAD "E"
(DPP SUBD. FILE NO. 2010/SUB-115)
(2010/CP-193)
INV.=68.24-8"

EXIST. 8" PVC SEWER
CONSTRUCTED UNDER:
EAST KAPOLEI II DEVELOPMENT ROAD "E"
(DPP SUBD. FILE NO. 2010/SUB-115)
(2010/CP-193)

STA. 14+79.41 o/s 4'
CONNECT TO EXIST. S8 AT SAME ALIGNMENT AND GRADE. REMOVE PLUG AND MARKER

TRUE NORTH
Scale: 1 in. = 40 ft.

STA. 9+11.54 o/s 4'
CONST. SMH "D-1"
INV.=57.44-8"
INV.=57.27-10"

STA. 9+06.55 ROAD "D"
=STA. 16+15.18 ROAD "D-1"
INSTALL ST. SURVEY MON.
ELEV.=

STA. 9+06.55
CONST. 36 LF CONC. DRWY. APRON, 6" THK.

STA. 9+02.55 o/s 8'
12"x8" TEE, D.I.
2-12" GV, CL. 150
1-8" GV, CL. 150
3-VALVE BOXES
3-GV ANCHOR BLKS.
1 CONC. BLK.

STA. 8+76
CONST. CB "D-1"
TYPE "D"
INV.=59.48-24"
INV.=58.48-24"&36"

CONST. 8 LF RC JACKET

CONST. 21 LF RC JACKET

STA. 8+89 o/s 8'
1-12"⅛ D.I. BEND (BV)

STA. 8+94.50 o/s 8'
1-12"⅛ D.I. BEND (TV)

STA. 8+17.56 o/s 15'
REMOVE 36" PLUG
CONN. TO EXIST. 36" RCP
INV.=58.19±-36"

STA. 11+18
CONST. DMH "D-2"
INV.=64.65-24"

STA. 11+31 o/s 8'
1-12"⅛ D.I. BEND (BV)

STA. 11+36 o/s 8'
1-12"⅛ D.I. BEND (TV)

STA. 11+44.50 o/s 8'
12"x8" TEE, D.I.
2-12" GV, CL. 150
1-8" GV, CL. 150
3-VALVE BOXES
3 GV ANCHOR BLKS.
1-CONC. BLK.

STA. 11+53.54 o/s 4'
CONST. SMH "D-2"
INV.=61.72-8"
INV.=61.55-10"

STA. 11+48.55 ROAD "D"
=STA. 15+45.17 ROAD "D-2"
INSTALL ST. SURVEY MON.
ELEV.=

STA. 13+58 o/s 8'
1-12"⅛ D.I. BEND (TV)

STA. 13+62 o/s 8'
1-12"⅛ D.I. BEND (BV)

STA. 13+60
CONST. CB "D-3"
TYPE "B"
INV.=69.20-24"

CONST. 19.5 LF RC JACKET

STA. 13+73 o/s 8'
1-12"⅛ D.I. BEND (BV)

STA. 13+77.50 o/s 8'
1-12"⅛ D.I. BEND (TV)

STA. 13+95.55 o/s 4'
CONST. SMH "D-3"
INV.=65.80-8"
INV.=65.64-10"

STA. 13+90.55 ROAD "D"
=STA. 14+75.98 ROAD "D-3"
INSTALL ST. SURVEY MON.
ELEV.=

STA. 13+90.55
CONST. 36 LF CONC. DRWY. APRON, 6" THK.

STA. 13+86.55 o/s 8'
12"x8" TEE, D.I.
2-12" GV, CL. 150
1-8" GV, CL. 150
3-VALVE BOXES
3-GV ANCHOR BLKS.
1-CONC. BLK.

PLAN
SCALE: 1"=40'

PROFILE
SCALES: HORIZ. 1"=40'
VERT. 1"= 4'

FINISHED CURB GRADE
HGL
1.86%
2.24%
1.50%
0.85%
1.77%
1.78%
1.87%
1.75%
1.23%
1.69%
1.64%
1.26%

8" C-900 PVC SEWER 84 LF @ 1.64%
SEWER DATA
QR=0.16 MGD
QA=0.87 MGD
VR=2.94 fps
VA=3.84 fps
S=0.0164 ft/ft
n=0.015

10" C-900 PVC SEWER 242 LF @ 1.69%
SEWER DATA
QR=0.30 MGD
QA=1.63 MGD
VR=3.55 fps
VA=4.63 fps
S=0.0169 ft/ft
n=0.015

10" C-900 PVC SEWER 242 LF @ 1.77%
SEWER DATA
QR=0.35 MGD
QA=1.63 MGD
VR=3.72 fps
VA=4.63 fps
S=0.0177 ft/ft
n=0.015

24" RCP CL. III 242 LF @ 1.88%
24" RCP CL. III 242 LF @ 2.14%
10" C-900 PVC SEWER 94 LF @ 0.50%
36" RCP CL. III 58 LF @ 0.50%
EXIST. 36" RCP @ 0.50%
EXIST. 10" PVC SEWER @ 0.50%
EXIST. 8" SEWER
EXIST. 48" RCP @ 0.50%
EXIST. 8" PVC SEWER @ 1.64%
EXIST. 8" PVC SEWER @ 1.26%
EX. 12" CROSS 66.1 12"
EX. SMH "E-3" 68.24 8"
EX. DMH "E-10" 69.92 42" 69.42 48" 68.92 54"
EX. W12 72.4 12"

CONN. TO EX. W12 VERIFY 60.6±
CONN. TO EX. 36" RCP VERIFY 58.19±
CONN. TO EX. S10 VERIFY 56.80±
CONN. TO EX. W12 72.4± VERIFY
CONN. TO EX. S8 67.18± VERIFY

DEFLECT @ ARV (V)
DEFLECT @ VALVE (V)
⅛ BEND (TV)
⅛ BEND (BV)
DC (V)

SMH "D-1" 57.44 8" 57.27 10"
SMH "D-2" 61.72 8" 61.55 10"
SMH "D-3" 65.80 8" 65.64 10"
DMH "D-2" 24" 64.65
CB "D-1" 24" 59.48 24"&36" 58.48
CB "D-3" 24" 69.20

12"x8" TEE 62.1 8" 61.9 12"
12"x8" TEE 66.7 8" 66.5 12"
12"x8" TEE 71.0 8" 70.8 12"

INTERS. 64.18
INTERS. 64.60
INTERS. 66.83
INTERS. 71.33
INTERS. 77.85
INTERS. 79.61

CG 64.00
CG 64.60
CG 77.89
CG 77.89

PI 64.90

21 LF RC JKT.
20 LF RC JKT.
19.5 LF RC JKT.

8+64 ¾" ARV
11+09 ¾" ARV
13+51 ¾" ARV

13+90.55 RD. "D" =14+75.98 RD. "D-3"

Horizontal: 40 20 0 40 80
Vertical: 4 3 2 1 0 4 8
Graphic Scale in Feet

LEGEND

- CENTERLINE
- PROPERTY LINE
- W16 — WATER LINE W/ SIZE
- D18 — DRAIN LINE W/ SIZE
- S8 — SEWER LINE W/ SIZE
- ER1W8 — EXIST. NON-POTABLE WATER W/ SIZE
- EW16 — EXIST. WATER LINE W/ SIZE
- ED18 — EXIST. DRAIN LINE W/ SIZE
- ES36 — EXIST. SEWER LINE W/ SIZE
- DC — DEFLECTION COUPLING
- CP — CONNECTOR PIECE

ANSON M. MURAYAMA
LICENSED PROFESSIONAL ENGINEER
No. 6975-C
HAWAII, U.S.A.

THIS WORK WAS PREPARED BY ME OR UNDER MY SUPERVISION. CONSTRUCTION OF THIS PROJECT WILL BE UNDER MY OBSERVATION. LICENSE EXPIRATION DATE: 04/30/14

REVISION DATE	DESCRIPTION	MADE BY	APPROVED

Community Planning and Engineering, Inc.
Engineering Design | Construction Management | Infrastructure Planning
1286 Queen Emma Street Honolulu, Hawaii

EAST KAPOLEI II DEVELOPMENT INCREMENT 2B

HONOULIULI, EWA, OAHU, HAWAII
(DPP SUBD. FILE NO. 2011/SUB-155)
OWNER & DEVELOPER: DEPARTMENT OF HAWAIIAN HOME LANDS
TAX MAP KEY: 9-1-17: Portion 110

PLAN AND PROFILE ROAD "D"

DRAWN BY: LYLT	ENGINEER: SS	CHECKED BY: AMM

APPROVED:

M. Fo 6/28/13
CHIEF, CIVIL ENGINEERING BRANCH, D.P.P. MT DATE

Scott Ayuhara 4/23/13
CHIEF, WASTEWATER BRANCH, D.P.P. DATE
(FOR CONFORMANCE TO CITY STANDARDS ONLY)

CHIEF, TRAFFIC REVIEW BRANCH, D.P.P. DATE

MANAGER AND CHIEF ENGINEER, B.W.S. ML DD 7-22-13
(FOR WORK AFFECTING BWS FACILITIES IN CITY/STATE ROAD-OF-WAY AND BWS EASEMENTS ONLY)

DWG. NO. C-13
SHEET 14 OF 78 SHEETS

FILE	POCKET	FOLDER	NO.

P:\Land Projects\DHHL East Kapolei II\Increment II-B\Construction Drawings\Government Review #3\PLAN AND PROFILE - ROAD D-1 STA 0+00, 3/13/2013 1:50:59 PM, 1:1

18" RCP CL. III
25 LF @ 4.00%

STA. 0+47.03 o/s 4'
1-8" ⅛ BEND (BV)

STA. 0+42.50 o/s 4'
1-8" ⅛ BEND (TV)

STA. 0+36 o/s 4'
1-8" BOSSED TEE TAPPED FOR ¾" BALL CORP.
1- ¾" ARV (WP=66.85 PSI)
1-ARV BOX

STA. 0+13.50 RD. "D-1" o/s 4'
=STA. 10+12.64 RD. "A" o/s 14'
16"x8" TEE, DI

STA. (-)0+05 RD. "D-1" o/s 4'
=STA. 10+21.64 RD. "A" o/s 5'
SMH "A-1"
INV.=56.41-8"
INV.=56.24-10"

STA. 0+00 ROAD "D-1"
=STA. 10+16.64 ROAD "A"
ST. SURVEY MON.
ELEV.=

STA. 9+89 RD. "A"
CB "A-1"
INV.=58.67-30"
INV.=56.67-54"
INV.=56.17-60"

151°18' 197.98'
(MON. TO MON.)

151°18' 242.00'
(MON. TO MON.)

ROAD "A"
(DHHL OWNED/CITY MAINTAINED)
SEE DWG. NO. C-11

STA. 0+52
CONST. CB "D1-1"
TYPE "B"
INV.=59.55-18"
INV.=59.55-24"
INV.=59.05-30"

STA. 0+57.03 o/s 4'
1-8" ⅛ BEND (BV)

STA. 0+62.03 o/s 4'
1-8" ⅛ BEND (TV)

STA. 0+52.03
CONST. CB "D1-1a"
TYPE "A"
INV.=60.54-18"

CONST. 19.5 LF
RC JACKET

STA. 1+79.50 o/s 4'
1-8" BOSSED TEE TAPPED FOR ¾" BALL CORP.
1- ¾" ARV (WP=66.3 PSI)
1-ARV BOX

241°18' 258.01'
(MON. TO MON.)

TYPE "A" LATERAL

CONST. 10 LF
RC JACKET

TYPE "A" LATERAL

STA. 1+94
CONST. CB "D1-2"
TYPE "B"
INV.=61.00-18"
INV.=60.50-24"

STA. 2+00.50 o/s 4'
1-8" ⅛ BEND (BV)

STA. 2+05 o/s 4'
1-8" ⅛ BEND (TV)

STA. 1+86.03 o/s 4'
1-8" ⅛ BEND (TV)

STA. 1+90.53 o/s 4'
1-8" ⅛ BEND (BV)

CONST. 19 LF RC JACKET

STA. 2+02.03
CONST. CB "D1-2a"
TYPE "A"
INV.=61.52-18"

18" RCP CL. III
26 LF @ 2.00%

STA. 3+10 o/s 3.2'
CONST. SMH "D1-1"
INV.=58.87-8"

PC STA. 2+58.01
INSTALL STREET SURVEY MON.
ELEV.=

STA. 2+58.50 o/s 4'
1-8" PVC DEFL. COUPLING (H)

TYPE "A" LATERAL

STA. 3+02 o/s 2.9'
FH CONN.
1-8"x6" TEE, DI
1-6" GV, CL. 150
1-VALVE BOX
1-GV ANCHOR BLK.
17 LF 6" PVC PIPE, CL. 150
1-FH (HT.=5.0')
1-FH EXTENSION PIECE
2-CONC. BLKS.
1-CONC. PAD
1-BLUE REFLECTIVE MARKER

STA. 3+25 o/s 3.3'
1-8" ⅛ BEND (H,TV)

STA. 3+18.50 o/s 3.1'
1-8" BOSSED TEE TAPPED FOR ¾" BALL CORP.
1- ¾" ARV (WP=65.9 PSI)
1-ARV BOX

CONST. 19 LF RC JACKET

STA. 3+36.03
CONST. CB "D1-3a"
TYPE "A"
INV.=62.44-18"

18" RCP CL. III
25 LF @ 2.00%

TYPE "A" LATERAL

STA. 4+62.50 o/s 5'
CONST. SMH "D1-2"
INV.=59.88-8"

1
233°00'30" 212.28'
(PC TO PT)

ROAD "D-1"

STA. 3+60.94
o/s 3.15'
1-8" PVC DEFL. COUPLING (H)

STA. 4+30 o/s 8'
CONST. DMH "D1-4"
INV.=62.59-18"

STA. 3+44 o/s 3'
1-8" ⅛ BEND (TV)

STA. 3+39.53 o/s 3'
1-8" ⅛ BEND (BV)

STA. 3+34
CONST. CB "D1-3"
TYPE "B"
INV.=61.94-18"

STA. 3+29.50 o/s 3.2'
1-8" ⅛ BEND (BV)

STA. 4+69.85
o/s 4'
1-8" PVC DEFL. COUPLING (H)

PT STA. 4+71.01
INSTALL STREET SURVEY MON.
ELEV.=

CONST. 19.5 LF
RC JACKET

STA. 5+23.50
CONST. CB "D1-5"
TYPE "B"
INV.=63.22-18"

STA. 5+07.50 o/s 4'
1-8" BOSSED TEE TAPPED FOR ¾" BALL CORP.
1- ¾" ARV (WP=65.4 PSI)
1-ARV BOX

STA. 5+14 o/s 4'
1-8" ⅛ BEND (TV)

STA. 5+18.50 o/s 4'
1-8" ⅛ BEND (BV)

STA. 5+24.50
CONST. CB "D1-5a"
TYPE "A"
INV.=63.72-18"

18" RCP CL. III
25 LF @ 2.00%

224°43' 346.18'
(MON. TO MON.)

TYPE "A" LATERAL

STA. 5+90 o/s 4'
FH CONN.
1-8"x6" TEE, DI
1-6" GV, CL. 150
1-VALVE BOX
1-GV ANCHOR BLK.
19 LF 6" PVC PIPE, CL. 150
1-FH (HT.=5.0')
1-FH EXTENSION PIECE
2-CONC. BLKS.
1-CONC. PAD
1-BLUE REFLECTIVE MARKER

STA. 5+33.50 o/s 4'
1-8" ⅛ BEND (TV)

STA. 5+28.50 o/s 4'
1-8" ⅛ BEND (BV)

TYPE "A" LATERAL

CONST. 19.5 LF
RC JACKET

STA. 6+77
CONST. CB "D1-6"
TYPE "B"
INV.=64.25-18"

STA. 6+82.50 o/s 4'
1-8" ⅛ BEND (BV)

STA. 6+87.50 o/s 4'
1-8" ⅛ BEND (TV)

STA. 6+78.50
CONST. CB "D1-6a"
TYPE "A"
INV.=64.75-18"

STA. 6+72.50 o/s 4'
1-8" ⅛ BEND (BV)

STA. 6+68 o/s 4'
1-8" ⅛ BEND (TV)

STA. 6+61.50 o/s 4'
1-8" BOSSED TEE TAPPED FOR ¾" BALL CORP.
1- ¾" ARV (WP=64.9 PSI)
1-ARV BOX

STA. 7+46.70 o/s 4'
1-8" PVC DEFL. COUPLING (V)

STA. 7+77.50 o/s 4'
1-8" ⅛ BEND (H)
1-CONC. BLK.

STA. 7+81.50 o/s 8'
1-8" ⅛ BEND (H)
1-CONC. BLK.

STA. 7+86.50 o/s 8'
1-8" BOSSED TEE TAPPED FOR ¾" BALL CORP.
1- ¾" ARV (WP=64.6 PSI)
1-ARV BOX

STA. 8+11 o/s 8'
1-8" ⅛ BEND (BV)

STA. 8+01 o/s 8'
1-8" ⅛ BEND (BV)

CONST. 26 LF
RC JACKET

STA. 7+93 o/s 8'
1-8" ⅛ BEND (TV)

18" RCP CL. III
25 LF @ 2.00%

STA. 7+37.75 o/s 5'
CONST. SMH "D1-3"
INV.=61.73-8"

ROAD "B"
(DHHL OWNED/CITY MAINTAINED)
SEE DWG. NO. C-12

STA. 8+26.19 RD. "D-1" o/s 8'
=STA. 8+30 RD. "B" o/s 9'
8" CROSS, DI

STA. 8+19 o/s 8'
1-8" ⅛ BEND (TV)

134°43' 197.99'
(MON. TO MON.)

134°43' 242.00'
(MON. TO MON.)

STA. 8+17.19 ROAD "D-1"
=STA. 8+38 ROAD "B"
STREET SURVEY MON.
ELEV.=

STA. 8+87.50 o/s 4'
1-8" PVC DEFL. COUPLING (V)

STA. 8+39 o/s 4'
1-8" ⅛ BEND (H)
1-CONC. BLK.

STA. 8+35 o/s 8'
1-8" ⅛ BEND (H)
1-CONC. BLK.

MATCHLINE STA. 8+90
SEE DWG. NO. C-15

TRUE NORTH
Scale: 1 in. = 40 ft.

CURVE DATA	
CURVE	1
△	16°35'00"
△/2	8°17'30"
R	736.00'
T	107.26'
C	212.28'
Lc	213.02'

PLAN
SCALE: 1"=40'

LEGEND
- CENTERLINE
- PROPERTY LINE
- W16 — WATER LINE W/ SIZE
- R1W8 — NON-POTABLE WATER LINE W/ SIZE
- D18 — DRAIN LINE W/ SIZE
- S8 — SEWER LINE W/ SIZE
- D18 — EXIST. DRAIN LINE W/ SIZE
- DC — DEFLECTION COUPLING
- CP — CONNECTOR PIECE

30" RCP CL. III
75 LF @ 0.50%

18" RCP CL. III
26 LF @ 2.00%

24" RCP CL. III 142 LF @ 0.67%

18" RCP CL. III
141 LF @ 0.67%

315 LF @ 0.78%

8" PVC C-900 SEWER

18" RCP CL. III
97 LF @ 0.67%

18" RCP
94 LF
CL. III
@ 0.67%

8" PVC C-900 SEWER
151 LF @ 0.67%

SEWER DATA
QR=0.03 MGD
QA=0.55 MGD
VR=1.33 fps
VA=2.46 fps
S=0.0067 ft/ft
n=0.015

18" RCP CL. III 154 LF @ 0.67%

8" PVC C-900 SEWER 275 LF @ 0.67%

SEWER DATA
QR=0.02 MGD
QA=0.55 MGD
VR=1.23 fps
VA=2.46 fps
S=0.0067 ft/ft
n=0.015

PROFILE
SCALES: HORIZ. 1"=40'
VERT. 1"= 4'

Horizontal: 40 20 0 40 80
Vertical: 4 3 2 1 0 4 8
Graphic Scale in Feet

REVISION DATE	DESCRIPTION	MADE BY	APPROVED

Community Planning and Engineering, Inc.
Engineering Design | Construction Management | Infrastructure Planning
1286 Queen Emma Street Honolulu, Hawaii

EAST KAPOLEI II DEVELOPMENT INCREMENT 2B

HONOULIULI, EWA, OAHU, HAWAII
(DPP SUBD. FILE NO. 2011/SUB-155)
OWNER & DEVELOPER: DEPARTMENT OF HAWAIIAN HOME LANDS
TAX MAP KEY: 9-1-17: Portion 110

PLAN AND PROFILE
ROAD "D-1"
STA. 0+00 TO 8+90

DRAWN BY: LYLT	ENGINEER: SS	CHECKED BY: AMM

APPROVED:

CHIEF, OWL ENGINEERING BRANCH, D.P.P. — DATE 6/28/13
CHIEF, TRAFFIC REVIEW BRANCH, D.P.P. — DATE 6/18/13
CHIEF, WASTEWATER BRANCH, D.P.P. (FOR CONFORMANCE TO CITY STANDARDS ONLY) — DATE 4/23/13
MANAGER AND CHIEF ENGINEER, B.W.S. — DATE 6-26-13
CITY & COUNTY OF HONOLULU
(FOR WORK AFFECTING BWS FACILITIES IN CITY/STATE RIGHTS-OF-WAY AND BWS EASEMENTS ONLY)

ANSON M. MURAYAMA
LICENSED PROFESSIONAL ENGINEER
No. 6975-C
HAWAII, U.S.A.

THIS WORK WAS PREPARED BY ME OR UNDER MY SUPERVISION. CONSTRUCTION OF THIS PROJECT WILL BE UNDER MY OBSERVATION. LICENSE EXPIRATION DATE: 04/30/14

DWG. NO. C-14

SHEET 15 OF 78 SHEETS

FILE	POCKET	FOLDER	NO.

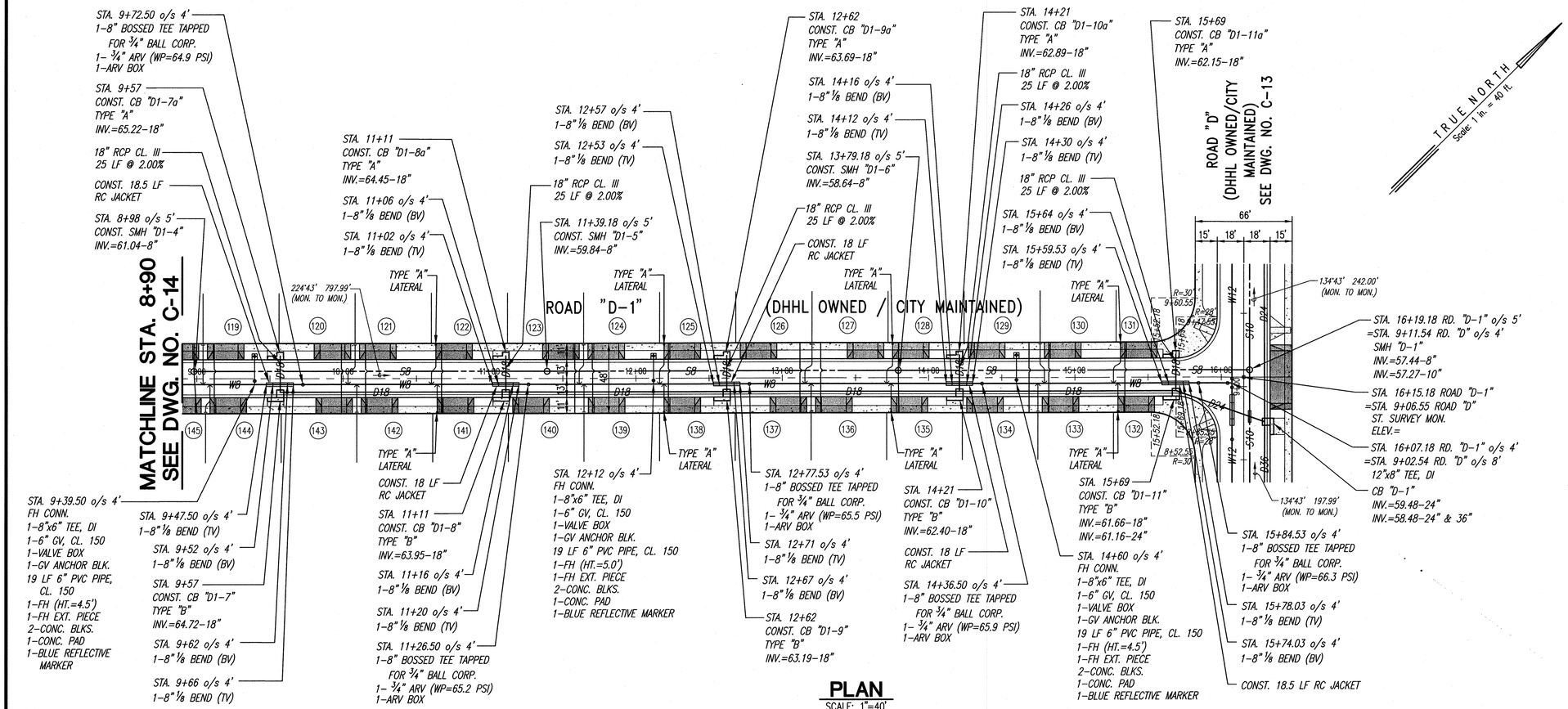

PLAN
SCALE: 1"=40'

LEGEND

———	CENTERLINE
— — —	PROPERTY LINE
W16	WATER LINE W/ SIZE
D18	DRAIN LINE W/ SIZE
S8	SEWER LINE W/ SIZE
DC	DEFLECTION COUPLING
CP	CONNECTOR PIECE

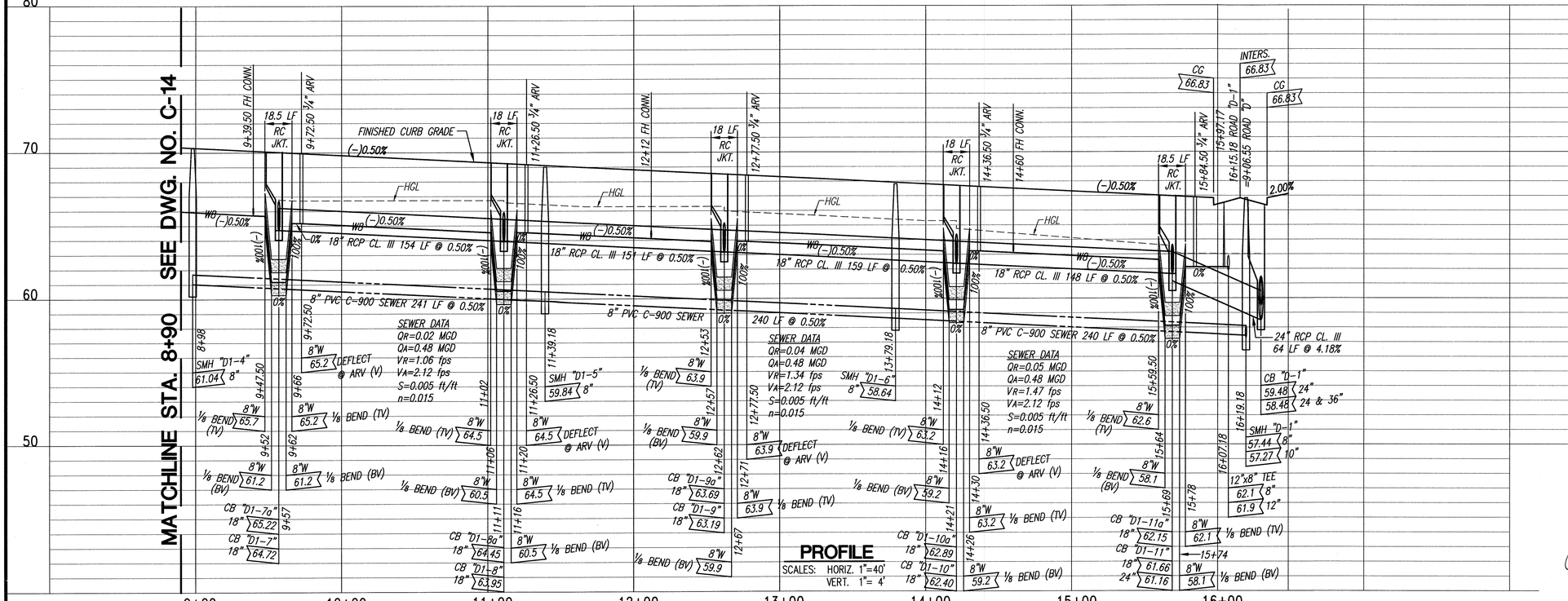

PROFILE
SCALES: HORIZ. 1"=40'
VERT. 1"= 4'

40 20 0 40 80
Horizontal
4 3 2 1 0 4 8
Vertical
Graphic Scale in Feet

REVISION DATE	DESCRIPTION	MADE BY	APPROVED

Community Planning and Engineering, Inc.
Engineering Design | Construction Management | Infrastructure Planning
1286 Queen Emma Street Honolulu, Hawaii

EAST KAPOLEI II DEVELOPMENT INCREMENT 2B

HONOULIULI, EWA, OAHU, HAWAII
(DPP SUBD. FILE NO. 2011/SUB-155)
OWNER & DEVELOPER: DEPARTMENT OF HAWAIIAN HOME LANDS
TAX MAP KEY: 9-1-17: Portion 110

PLAN AND PROFILE ROAD "D-1" STA. 8+90 TO END

DRAWN BY:	LYLT	ENGINEER:	SS	CHECKED BY:	AMM

APPROVED:

M. Tom 6/28/13
CHIEF, CIVIL ENGINEERING BRANCH, D.P.P. DATE

Scott Ginoza 4/23/13
CHIEF, WASTEWATER BRANCH, D.E.P. DATE
(FOR CONFORMANCE TO CITY STANDARDS ONLY)

4/15/13
CHIEF, TRAFFIC REVIEW BRANCH, D.P.P. DATE

4-29-13
MANAGER AND CHIEF ENGINEER, B.W.S. DATE
CITY & COUNTY OF HONOLULU
(FOR WORK AFFECTING BWS FACILITIES IN CITY/STATE RIGHT-OF-WAY AND BWS EASEMENTS ONLY)

ANSON M. MURAYAMA
LICENSED PROFESSIONAL ENGINEER
No. 6975-C
HAWAII, U.S.A.

THIS WORK WAS PREPARED BY ME OR UNDER MY SUPERVISION. CONSTRUCTION OF THIS PROJECT WILL BE UNDER MY OBSERVATION. LICENSE EXPIRATION DATE: 04/30/14

DWG. NO. C-15 SHEET 16 OF 78 SHEETS

FILE	POCKET	FOLDER	NO.

P:\Land Projects\DHHL East Kapolei II\Increment II-B\Construction Drawings\Government Review #3\PLAN AND PROFILE - ROAD D-1 STA GR#3.dwg, 16 PLAN AND PROFILE - ROAD D-1 STA, 3/13/2013 1:54:43 PM, 1:1

P:\Land Projects\DHHL East Kapolei II\Increment II-B\Construction Drawings\Government Review #3\PLAN AND PROFILE - ROAD D-2 STA 0+00, 3/13/2013 2:08:26 PM, 1:1

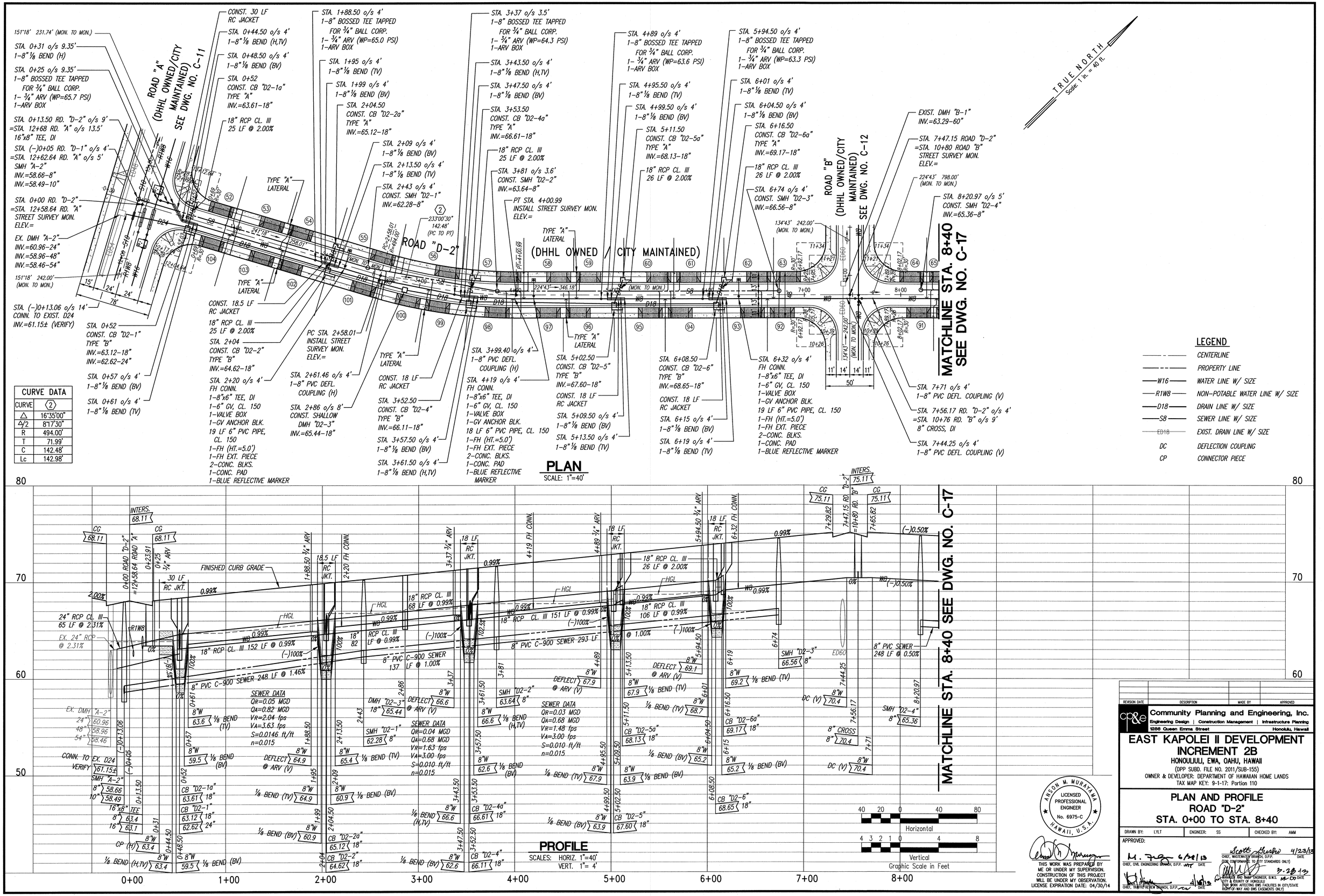

CURVE DATA	
CURVE	②
△	16°35'00"
△/2	8°17'30"
R	494.00'
T	71.99'
C	142.48'
Lc	142.98'

LEGEND

- CENTERLINE
- PROPERTY LINE
- W16 — WATER LINE W/ SIZE
- R1W8 — NON-POTABLE WATER LINE W/ SIZE
- D18 — DRAIN LINE W/ SIZE
- S8 — SEWER LINE W/ SIZE
- ED18 — EXIST. DRAIN LINE W/ SIZE
- DC — DEFLECTION COUPLING
- CP — CONNECTOR PIECE

THIS WORK WAS PREPARED BY ME OR UNDER MY SUPERVISION. CONSTRUCTION OF THIS PROJECT WILL BE UNDER MY OBSERVATION. LICENSE EXPIRATION DATE: 04/30/14

ANSON M. MURAYAMA LICENSED PROFESSIONAL ENGINEER No. 6975-C HAWAII, U.S.A.

REVISION DATE	DESCRIPTION	MADE BY	APPROVED

Community Planning and Engineering, Inc.
Engineering Design | Construction Management | Infrastructure Planning
1286 Queen Emma Street Honolulu, Hawaii

EAST KAPOLEI II DEVELOPMENT INCREMENT 2B

HONOULIULI, EWA, OAHU, HAWAII
(DPP SUBD. FILE NO. 2011/SUB-155)
OWNER & DEVELOPER: DEPARTMENT OF HAWAIIAN HOME LANDS
TAX MAP KEY: 9-1-17: Portion 110

PLAN AND PROFILE ROAD "D-2" STA. 0+00 TO STA. 8+40

DRAWN BY: LYLT	ENGINEER: SS	CHECKED BY: AMM

APPROVED:

6/28/13
CHIEF, CIVIL ENGINEERING BRANCH, D.P.P. DATE

4/23/13
CHIEF, WASTEWATER BRANCH, D.P.P. DATE
(SIZE CONFORMANCE TO CITY STANDARDS ONLY)

5-28-13
MANAGER AND CHIEF ENGINEER, B.W.S. DATE
CITY & COUNTY OF HONOLULU
(FOR WORK AFFECTING BWS FACILITIES IN CITY/STATE RIGHT-OF-WAY AND BWS EASEMENTS ONLY)

FILE	POCKET	FOLDER	NO.

DWG. NO. C-16 SHEET 17 OF 78 SHEETS

P:\Land Projects\DHHL East Kapolei II\Increment II-B\Construction Drawings\Government Review #3\PLAN AND PROFILE - ROAD D-2 STA GR#3.dwg, 18 PLAN AND PROFILE - ROAD D-2 STA, 3/13/2013 2:14:00 PM, 1:1

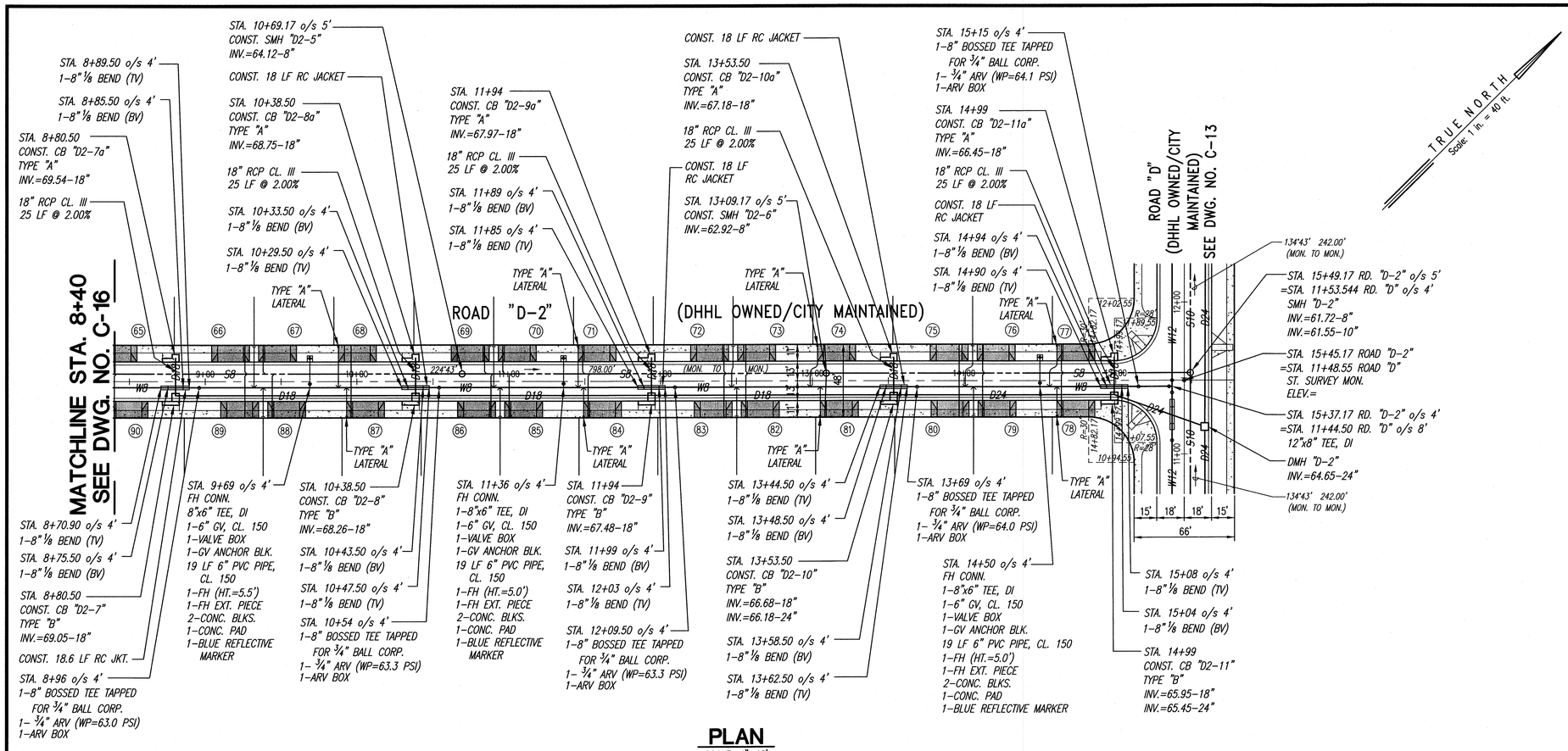

PLAN
SCALE: 1"=40'

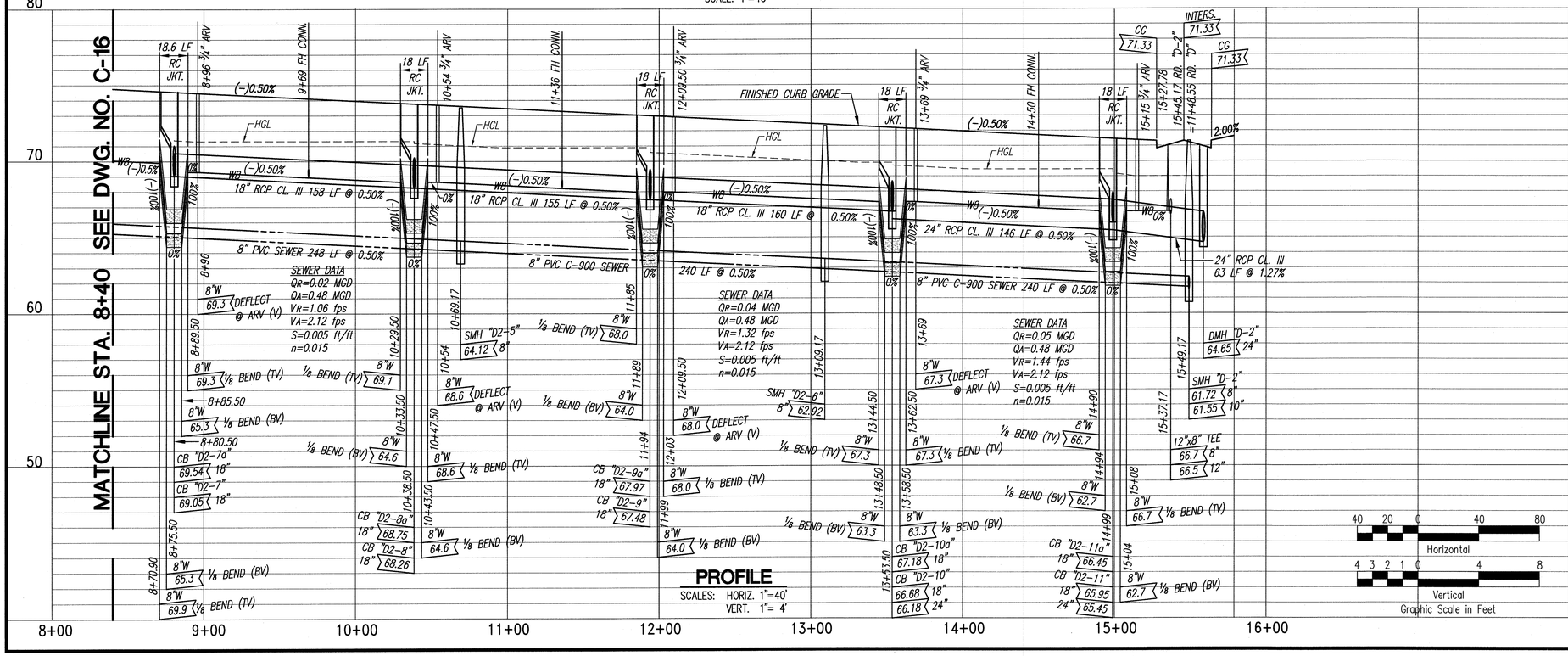

PROFILE
SCALES: HORIZ. 1"=40'
VERT. 1"= 4'

Horizontal: 40 20 0 40 80
Vertical: 4 3 2 1 0 4 8
Graphic Scale in Feet

REVISION DATE	DESCRIPTION	MADE BY	APPROVED

cp&e Community Planning and Engineering, Inc.
Engineering Design | Construction Management | Infrastructure Planning
1288 Queen Emma Street Honolulu, Hawaii

EAST KAPOLEI II DEVELOPMENT INCREMENT 2B
HONOULIULI, EWA, OAHU, HAWAII
(DPP SUBD. FILE NO. 2011/SUB-155)
OWNER & DEVELOPER: DEPARTMENT OF HAWAIIAN HOME LANDS
TAX MAP KEY: 9-1-17: Portion 110

PLAN AND PROFILE ROAD "D-2" STA. 8+40 TO END

DRAWN BY: LYLT	ENGINEER: SS	CHECKED BY: AMM

APPROVED:

M. Tagawa 6/28/13
CHIEF, CIVIL ENGINEERING BRANCH, D.P.P. DATE

Scott Yushi 4/23/13
CHIEF, WASTEWATER BRANCH, D.P.P. DATE
(FOR TRANSMITTAL TO CITY STANDARDS ONLY)

CHIEF, TRAFFIC REVIEW BRANCH, D.P.P. DATE

MANAGER AND CHIEF ENGINEER, B.W.S. DATE
CITY & COUNTY OF HONOLULU
(FOR WORK AFFECTING BWS FACILITIES IN CITY/STATE ROAD-OF-WAY AND BWS EASEMENTS ONLY)

ANSON M. MURAYAMA
LICENSED PROFESSIONAL ENGINEER
No. 6975-C
HAWAII, U.S.A.

THIS WORK WAS PREPARED BY ME OR UNDER MY SUPERVISION. CONSTRUCTION OF THIS PROJECT WILL BE UNDER MY OBSERVATION. LICENSE EXPIRATION DATE: 04/30/14

FILE	POCKET	FOLDER	NO.

DWG. NO. C-17

SHEET 18 OF 78 SHEETS

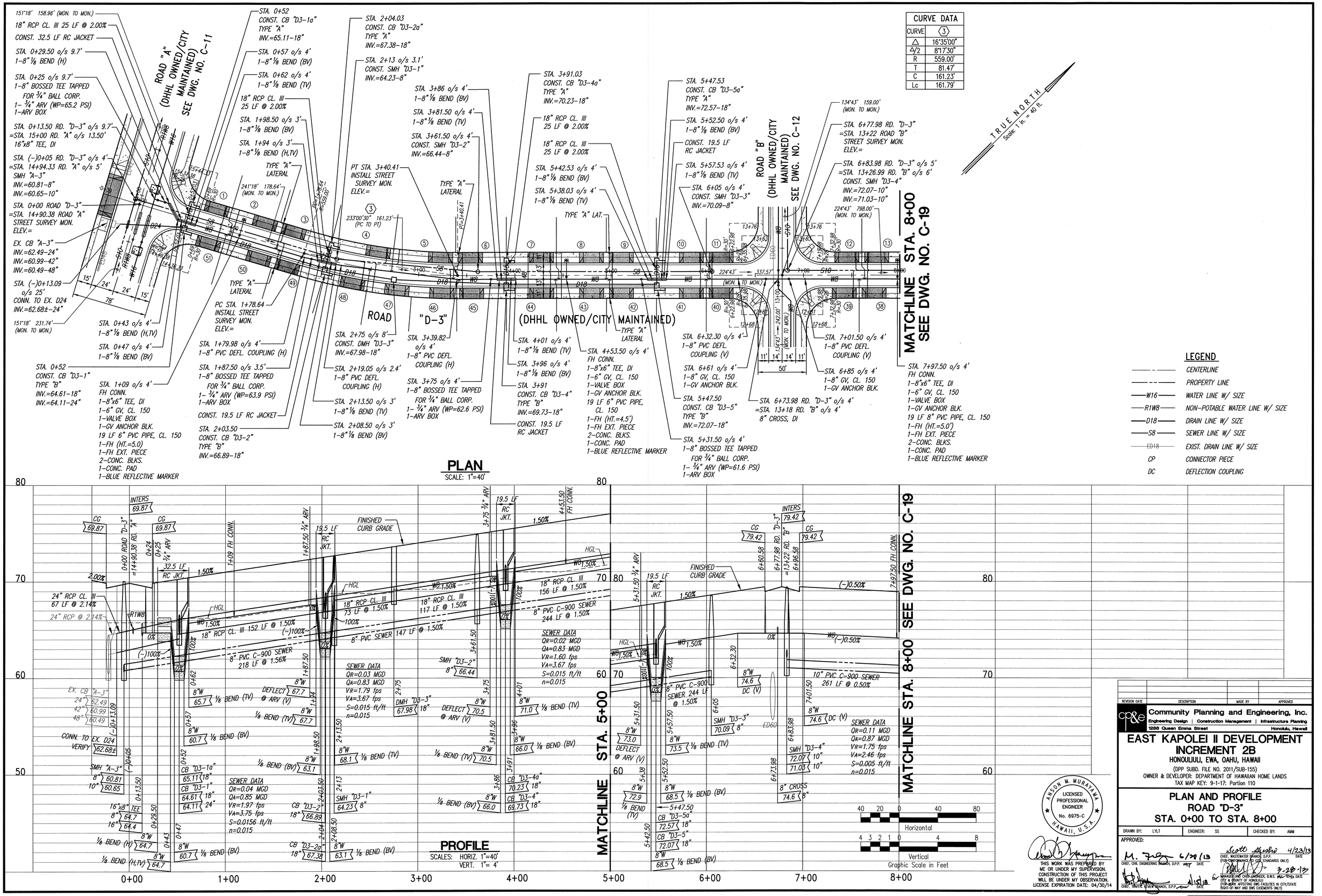

ANSON M. MURAYAMA LICENSED PROFESSIONAL ENGINEER No. 6975-C HAWAII, U.S.A.

THIS WORK WAS PREPARED BY ME OR UNDER MY SUPERVISION. CONSTRUCTION OF THIS PROJECT WILL BE UNDER MY OBSERVATION. LICENSE EXPIRATION DATE: 04/30/14

REVISION DATE	DESCRIPTION	MADE BY	APPROVED

cp&e Community Planning and Engineering, Inc.
Engineering Design | Construction Management | Infrastructure Planning
1286 Queen Emma Street Honolulu, Hawaii

EAST KAPOLEI II DEVELOPMENT INCREMENT 2B

HONOULULI, EWA, OAHU, HAWAII
(DPP SUBD. FILE NO. 2011/SUB-155)
OWNER & DEVELOPER: DEPARTMENT OF HAWAIIAN HOME LANDS
TAX MAP KEY: 9-1-17: Portion 110

PLAN AND PROFILE ROAD "D-3" STA. 0+00 TO STA. 8+00

DRAWN BY: LYLT	ENGINEER: SS	CHECKED BY: AMM

APPROVED:

M. Fujiwara 6/28/13 CHIEF, CIVIL ENGINEERING BRANCH, D.P.P. DATE
Scott Glenboski 4/23/13 CHIEF, WASTEWATER BRANCH, D.P.P. DATE (FOR CONFORMANCE TO CSS STANDARDS ONLY)
4/15/13 CHIEF, TRAFFIC REVIEW BRANCH, D.P.P. DATE
for 3-28-13 MANAGER AND CHIEF ENGINEER, B.W.S. DATE CITY & COUNTY OF HONOLULU (FOR WORK AFFECTING BWS FACILITIES IN CITY/STATE RIGHT-OF-WAY AND BWS EASEMENTS ONLY)

DWG. NO. C-18 SHEET 19 OF 78 SHEETS

FILE	POCKET	FOLDER	NO.

P:\Land Projects\DHHL East Kapolei II\Increment II-B\Construction Drawings\Government Review #3\PLAN AND PROFILE - ROAD D-3 STA 0+00 GR#3.dwg, 19 PLAN AND PROFILE, 3/13/2013 2:17:03 PM, 1:1

P:\Land Projects\DHHL East Kapolei II\Increment I-B\Construction Drawings\Government Review #3\PLAN AND PROFILE - ROAD D-3 STA. 3/20/2013 9:16:23 AM, 1:1

MATCHLINE STA. 8+00 SEE DWG. NO. C-18

ROAD "D-3" (DHHL OWNED/CITY MAINTAINED)

ROAD "D" (DHHL OWNED/CITY MAINTAINED) SEE DWG. NO. C-13

TRUE NORTH
Scale: 1 in. = 40 ft.

STA. 8+26 o/s 4'
1-8" BOSSED TEE TAPPED FOR ¾" BALL CORP.
1- ¾" ARV (WP=61.1 PSI)
1-ARV BOX

CONST. 18 LF RC JACKET

STA. 8+10.50
CONST. CB "D3-6a" TYPE "A"
INV.=73.83-18"

STA. 9+84 o/s 4'
1-8" BOSSED TEE TAPPED FOR ¾" BALL CORP.
1- ¾" ARV (WP=61.5 PSI)
1-ARV BOX

STA. 9+68.50
CONST. CB "D3-7a"
TYPE "A"
INV.=73.04-18"

18" RCP CL. III
25 LF @ 2.00%

CONST. 18 LF
RC JACKET

STA. 9+44.41 o/s 5'
CONST. SMH "D3-5"
INV.=69.73-10"

TYPE "A" LATERAL

STA. 11+41.03 o/s 4'
1-8" BOSSED TEE TAPPED FOR ¾" BALL CORP.
1- ¾" ARV (WP=61.8 PSI)
1-ARV BOX

STA. 11+25.53
CONST. CB "D3-8a"
TYPE "A"
INV.=72.25-18"

18" RCP CL. III
25 LF @ 2.00%

CONST. 18 LF
RC JACKET

TYPE "A"
LATERAL

STA. 12+99 o/s 4'
1-8" BOSSED TEE TAPPED FOR ¾" BALL CORP.
1- ¾" ARV (WP=62.1 PSI)
1-ARV BOX

STA. 12+83.53
CONST. CB "D3-9a"
TYPE "A"
INV.=71.46-18"

18" RCP CL. III
25 LF @ 2.00%

CONST. 18.5 LF
RC JACKET

TYPE "A" LATERAL

STA. 12+19.41 o/s 5'
CONST. SMH "D3-6"
INV.=68.35-10"

STA. 14+45.50 o/s 4'
1-8" BOSSED TEE TAPPED FOR ¾" BALL CORP.
1- ¾" ARV (WP=62.4 PSI)
1-ARV BOX

STA. 14+30.03
CONST. CB "D3-10a"
TYPE "A"
INV.=70.73-18"

18" RCP CL. III
25 LF @ 2.00%

CONST. 18 LF
RC JACKET

TYPE "A"
LATERAL

18" RCP CL. III
25 LF @ 2.00%

STA. 8+01.50 o/s 4'
1-8" ⅛ BEND (TV)

STA. 8+05.50 o/s 4'
1-8" ⅛ BEND (BV)

STA. 8+10.50
CONST. CB "D3-6"
TYPE "B"
INV.=73.34-18"

STA. 8+15.53 o/s 4'
1-8" ⅛ BEND (BV)

STA. 8+19.50 o/s 4'
1-8" ⅛ BEND (TV)

TYPE "A" LATERAL

STA. 9+59.53 o/s 4'
1-8" ⅛ BEND (TV)

STA. 9+63.53 o/s 4'
1-8" ⅛ BEND (BV)

STA. 9+68.50
CONST. CB "D3-7"
TYPE "B"
INV.=72.55-18"

STA. 9+73.50 o/s 4'
1-8" ⅛ BEND (BV)

STA. 9+77.50 o/s 4'
1-8" ⅛ BEND (TV)

STA. 10+67 o/s 4'
FH CONN.
1-8"x6" TEE, DI
1-6" GV, CL. 150
1-VALVE BOX
1-GV ANCHOR BLK.
19 LF 6" PVC PIPE, CL. 150
1-FH (HT.=4.5')
1-FH EXT. PIECE
2-CONC. BLKS.
1-CONC. PAD
1-BLUE REFLECTIVE MARKER

224"43' 798.00' (MON. TO MON.)

TYPE "A" LATERAL

STA. 11+16.53 o/s 4'
1-8" ⅛ BEND (TV)

STA. 11+20.53 o/s 4'
1-8" ⅛ BEND (BV)

STA. 11+25.50
CONST. CB "D3-8"
TYPE "B"
INV.=71.76-18"

TYPE "A" LATERAL

STA. 11+30.53 o/s 4'
1-8" ⅛ BEND (BV)

STA. 11+34.53 o/s 4'
1-8" ⅛ BEND (TV)

STA. 12+74.03 o/s 4'
1-8" ⅛ BEND (TV)

STA. 12+78.53 o/s 4'
1-8" ⅛ BEND (BV)

STA. 12+83.50
CONST. CB "D3-9"
TYPE "B"
INV.=70.97-18"

TYPE "A" LATERAL

STA. 12+88.53 o/s 4'
1-8" ⅛ BEND (BV)

STA. 12+92.50 o/s 4'
1-8" ⅛ BEND (TV)

STA. 13+75 o/s 4'
FH CONN.
1-8"x6" TEE, DI
1-6" GV, CL. 150
1-VALVE BOX
1-GV ANCHOR BLK.
19 LF 6" PVC PIPE, CL. 150
1-FH (HT.=5.0')
1-FH EXT. PIECE
2-CONC. BLKS.
1-CONC. PAD
1-BLUE REFLECTIVE MARKER

TYPE "A" LATERAL

STA. 14+03.03 o/s 4'
1-8" ⅛ BEND (TV)

STA. 14+35.03 o/s 4'
1-8" ⅛ BEND (BV)

STA. 14+30
CONST. CB "D3-10"
TYPE "B"
INV.=70.24-18"
INV.=69.74-24"

STA. 14+25 o/s 4'
1-8" ⅛ BEND (BV)

STA. 14+21 o/s 4'
1-8" ⅛ BEND (TV)

134"43' 159.00' (MON. TO MON.)

STA. 14+79.98 RD. "D-3" o/s 5'
=STA. 13+95.55 RD. "D" o/s 4'
SMH "D-3"
INV.=65.80-8"
INV.=65.64-10"

STA. 14+75.98 ROAD "D-3"
=STA. 13+90.55 ROAD "D"
ST. SURVEY MON.
ELEV.=

STA. 14+67.98 RD. "D-3" o/s 4'
=STA. 13+86.55 RD. "D" o/s 8'
12"x8" TEE, DI

CB "D-3"
TYPE "B"
INV.=69.20-24"

134"43' 242.00' (MON. TO MON.)

15' 18' 18' 15'
66'

PLAN
SCALE: 1"=40'

PROFILE
SCALES: HORIZ. 1"=40'
VERT. 1"= 4'

MATCHLINE STA. 8+00 SEE DWG. NO. C-18

18 LF RC JKT. 8+26 ¾" ARV
(-)0.50%
HGL
WG (-)0.50%
18" RCP CL. III 158 LF @ 0.50%
10" PVC C-900 SEWER 261 LF @ 0.50%
8+26 8"W 74.1 DEFLECT @ ARV (V)
8+19.50 8"W 74.1 ⅛ BEND (TV)
8+15.50 8"W 70.1 ⅛ BEND (BV)
8+10.50 CB "D3-6a" 73.83 18"
CB "D3-6" 73.34 18"
8+05.50 8"W 70.1 ⅛ BEND (BV)
8+01.50 8"W 74.1 ⅛ BEND (TV)

18 LF RC JKT. 9+84 ¾" ARV
9+44.41 SMH "D3-5" 10" 69.73
9+59.50 8"W ⅛ BEND (TV) 73.4
9+63.50 8"W ⅛ BEND (BV) 69.4
9+68.50 CB "D3-7a" 73.04 18"
CB "D3-7" 72.55 18"
9+73.50 8"W 73.4 ⅛ BEND (TV)
9+77.50 8"W 69.4 ⅛ BEND (BV)
9+84 8"W 73.4 DEFLECT @ ARV (V)
10+67 FH CONN.
(-)0.50%
HGL
WG (-)0.50%
18" RCP CL. III 157 LF @ 0.50%
10" PVC C-900 SEWER 275 LF @ 0.50%
SEWER DATA
QR=0.13 MGD
QA=0.87 MGD
VR=1.81 fps
VA=2.46 fps
S=0.005 ft/ft
n=0.015

18 LF RC JKT. 11+41 ¾" ARV
11+16.50 8"W ⅛ BEND (TV) 72.8
11+20.50 8"W ⅛ BEND (BV) 68.8
11+25.50 CB "D3-8a" 72.25 18"
CB "D3-8" 71.76 18"
11+30.50 8"W 72.8 ⅛ BEND (BV)
11+34.50 8"W 72.8 ⅛ BEND (TV)
11+41 8"W 72.8 DEFLECT @ ARV (V)
FINISHED CURB GRADE
(-)0.50%
HGL
WG (-)0.50%
18" RCP CL. III 158 LF @ 0.50%
12+19.41 SMH "D3-6" 10" 68.35
12+21.74 8"W ⅛ BEND (TV) 72.1
12+78.50 8"W ⅛ BEND (BV) 67.6
12+83.50 CB "D3-9a" 71.46 18"
CB "D3-9" 70.97 18"
12+88.50 8"W 67.6 ⅛ BEND (BV)
12+92.50 8"W 71.6 DEFLECT @ ARV (V)
12+99 ¾" ARV
18.5 LF RC JKT.
13+75 FH CONN.
(-)0.50%
HGL
WG (-)0.50%
18" RCP CL. III 147 LF @ 0.50%
10" PVC C-900 SEWER 261 LF @ 1.04%
SEWER DATA
QR=0.15 MGD
QA=1.21 MGD
VR=2.39 fps
VA=3.43 fps
S=0.0104 ft/ft
n=0.015

18 LF RC JKT. 14+45.50 ¾" ARV
14+58.57 "D-3"
14+75.98 RD. "D"
=13+90.55 RD.
CG 75.61
INTERS 75.61
CG 75.61
2.00%
14+21 8"W 71.0 ⅛ BEND (TV)
14+25 8"W 67.0 ⅛ BEND (BV)
14+30 CB "D3-10a" 70.73 18"
CB "D3-10" 70.24 18"
24" 69.74
14+35 8"W 67.0 ⅛ BEND (BV)
14+39 8"W 71.0 ⅛ BEND (TV)
14+61.98 12"x8" TEE 71.0 8" 70.8 12"
14+79.98 SMH "D-3" 65.80 8" 65.64 10"
24" RCP CL. III 64 LF @ 0.84%
CB "D-3" 69.20 24"

8+00 9+00 10+00 11+00 12+00 13+00 14+00 15+00
80 70 60

Horizontal: 40 20 0 40 80
Vertical: 4 3 2 1 0 4 8
Graphic Scale in Feet

LEGEND

———	CENTERLINE
— — —	PROPERTY LINE
W16	WATER LINE W/ SIZE
D18	DRAIN LINE W/ SIZE
S8	SEWER LINE W/ SIZE
CP	CONNECTOR PIECE
DC	DEFLECTION COUPLING

ANSON M. MURAYAMA
LICENSED PROFESSIONAL ENGINEER
No. 6975-C
HAWAII, U.S.A.

THIS WORK WAS PREPARED BY ME OR UNDER MY SUPERVISION. CONSTRUCTION OF THIS PROJECT WILL BE UNDER MY OBSERVATION. LICENSE EXPIRATION DATE: 04/30/14

REVISION DATE	DESCRIPTION	MADE BY	APPROVED

cp&e Community Planning and Engineering, Inc.
Engineering Design | Construction Management | Infrastructure Planning
1286 Queen Emma Street Honolulu, Hawaii

EAST KAPOLEI II DEVELOPMENT INCREMENT 2B

HONOULIULI, EWA, OAHU, HAWAII
(DPP SUBD. FILE NO. 2011/SUB-155)
OWNER & DEVELOPER: DEPARTMENT OF HAWAIIAN HOME LANDS
TAX MAP KEY: 9-1-17: Portion 110

PLAN AND PROFILE ROAD "D-3" STA. 8+00 TO END

DRAWN BY: LYLT	ENGINEER: SS	CHECKED BY: AMM

APPROVED:

CHIEF, CIVIL ENGINEERING BRANCH, D.P.P. — DATE 6/28/13

CHIEF, TRAFFIC REVIEW BRANCH, D.P.P. — DATE 4/15/13

CHIEF, WASTEWATER BRANCH, D.P.P. (FOR CONFORMANCE TO DPP STANDARDS ONLY) — Scott Grabo — DATE 4/23/13

MANAGER AND CHIEF ENGINEER, B.W.S. — DATE 4-30-13
CITY & COUNTY OF HONOLULU
(FOR WORK AFFECTING BWS FACILITIES IN CITY/STATE RIGHT-OF-WAY AND BWS EASEMENTS ONLY)

DWG. NO. C-19

SHEET 20 OF 78 SHEETS

FILE	POCKET	FOLDER	NO.

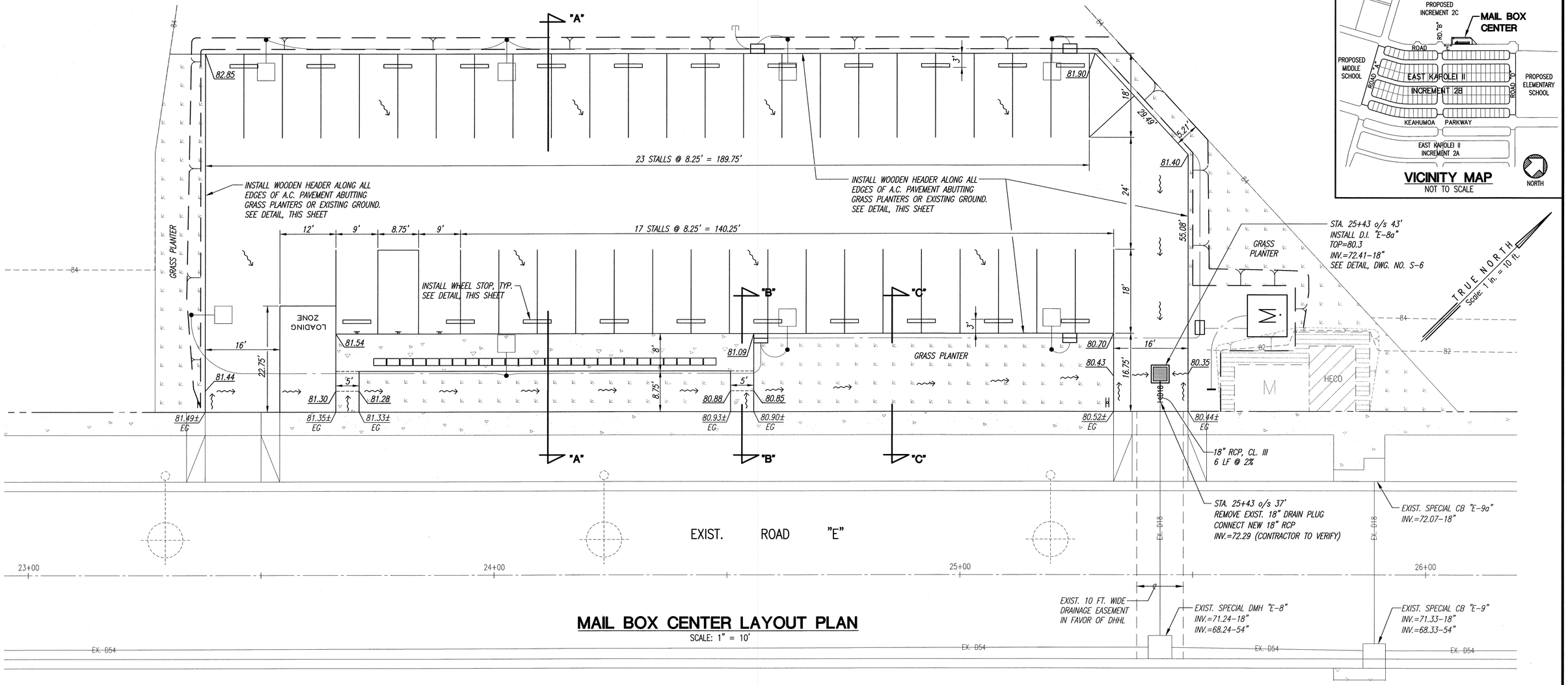

MAIL BOX CENTER LAYOUT PLAN

SCALE: 1" = 10'

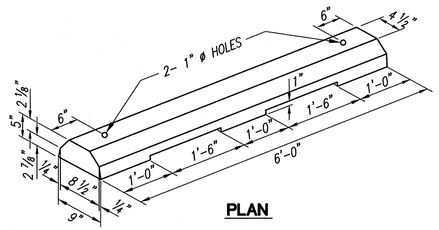

PLAN

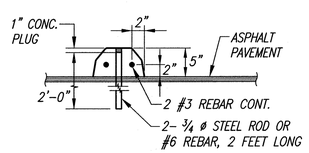

TYPICAL SECTION

DETAIL-PRECAST WHEEL STOP

NOT TO SCALE

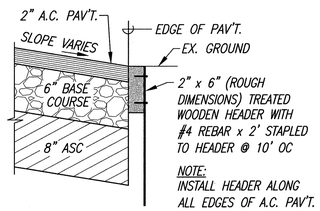

TYPICAL SECTION

DETAIL-WOODEN HEADER

NOT TO SCALE

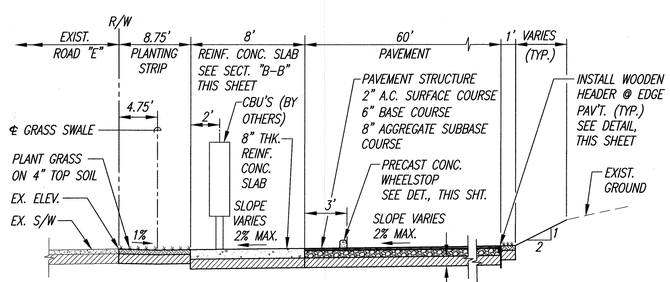

SECTION "A"-"A"

NOT TO SCALE

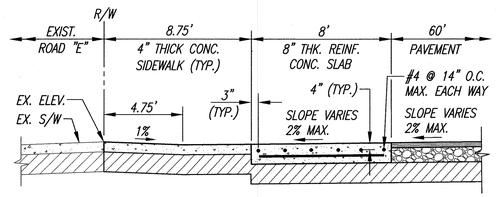

SECTION "B"-"B"

NOT TO SCALE

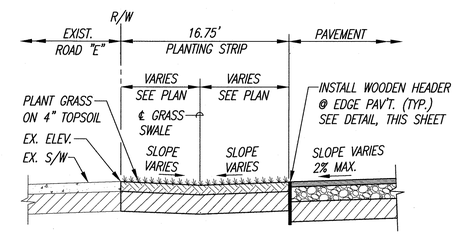

SECTION "C"-"C"

NOT TO SCALE

NOTE:
SEE "TECHNICAL SPECIFICATIONS DIVISION - 10. SECTION 10552 - CONC. PAD FOR MAIL BOXES" FOR ADDITIONAL DETAILS

10 5 0 10 20

Graphic Scale in Feet

LEGEND

~~	SURFACE WATER FLOW
EG	EXISTING GRADE
D.I.	DRAIN INLET
CB	CATCH BASIN
DMH	DRAIN MANHOLE
EX. D18	EXIST. DRAINLINE W/SIZE

REVISION DATE	DESCRIPTION	MADE BY	APPROVED

cp&e Community Planning and Engineering, Inc.
Engineering Design | Construction Management | Infrastructure Planning
1286 Queen Emma Street Honolulu, Hawaii

EAST KAPOLEI II DEVELOPMENT INCREMENT 2B

HONOULIULI, EWA, OAHU, HAWAII

(DPP SUBD. FILE NO. 2011/SUB-155)

OWNER & DEVELOPER: DEPARTMENT OF HAWAIIAN HOME LANDS

TAX MAP KEY: 9-1-17: Portion 110

MAIL BOX CENTER LAYOUT PLAN

DRAWN BY:	ENGINEER:	CHECKED BY:
LYLT	SS	AMM

APPROVED:

ANSON M. MURAYAMA
LICENSED PROFESSIONAL ENGINEER
No. 6975-C
HAWAII, U.S.A.

THIS WORK WAS PREPARED BY ME OR UNDER MY SUPERVISION. CONSTRUCTION OF THIS PROJECT WILL BE UNDER MY OBSERVATION. LICENSE EXPIRATION DATE: 04/30/14

DWG. NO. C-20 SHEET 21 OF 78 SHEETS

FILE	POCKET	FOLDER	NO.

P:\Land Projects\DHHL East Kapolei II\Increment II-B\Construction Drawings\Government Review #3\MAIL BOX CENTER LAYOUT PLAN GR#3.dwg, 21 MAIL BOX CENTER LAYOUT PLAN, 3/13/2013 2:34:36 PM, 1:1

P:\Land Projects\DHHL East Kapolei II\Increment II-B\Construction Drawings\Government Review #3\MB CENTER SIGNING AND STRIPING PLAN GR#3.dwg, 22 MAIL BOX CENTER SIGN AND STRIPING PLAN, 3/13/2013 2:37:33 PM, 1:1

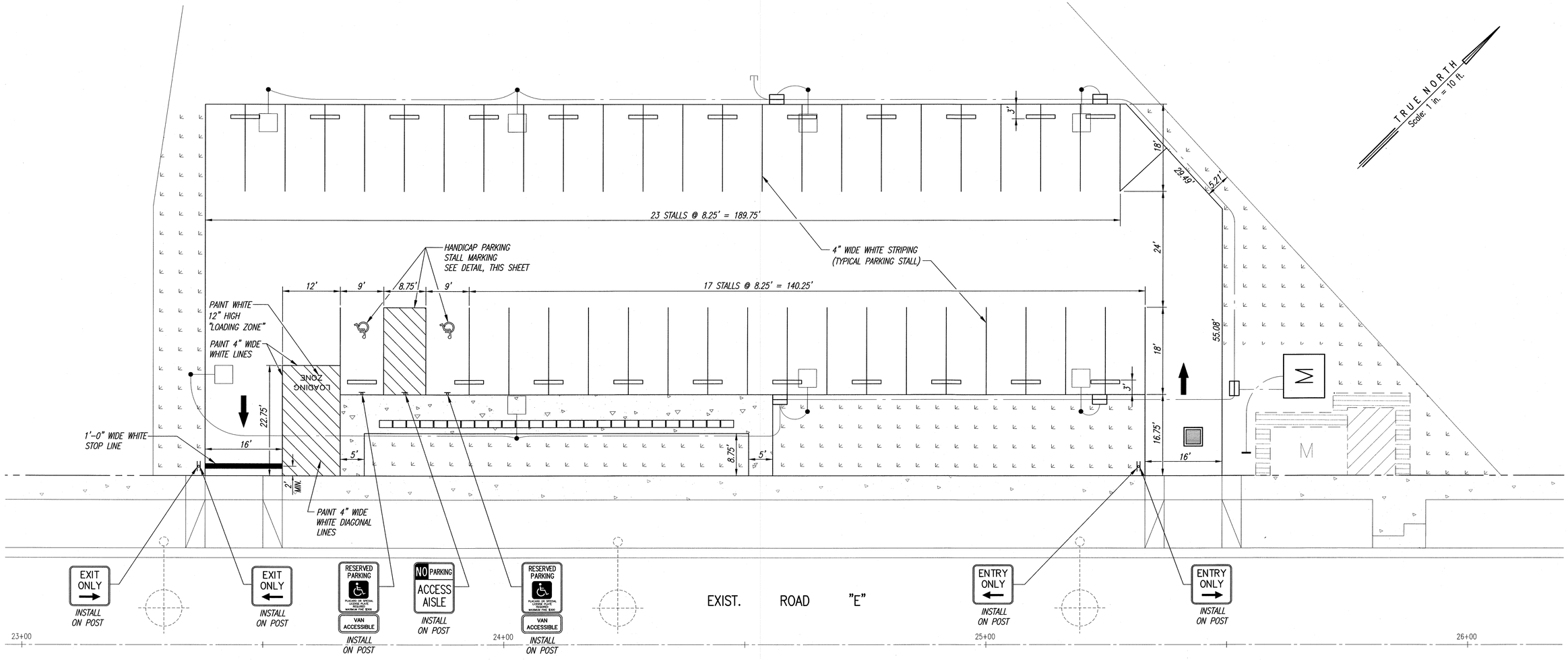

MAIL BOX CENTER SIGN AND STRIPING PLAN

SCALE: 1" = 10'

LEGEND

ENTRY ONLY ← 30"x30"

ENTRY ONLY → 30"x30"

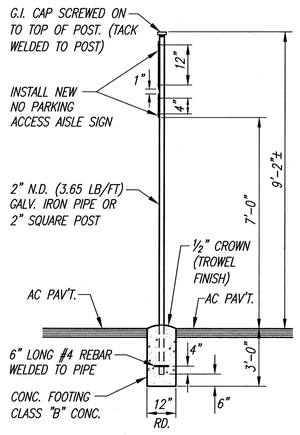

TYPICAL HANDICAP SIGN POST DETAIL
NOT TO SCALE

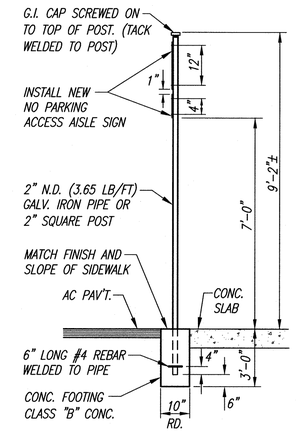

TYPICAL HANDICAP SIGN POST AT CONC SLAB DETAIL
NOT TO SCALE

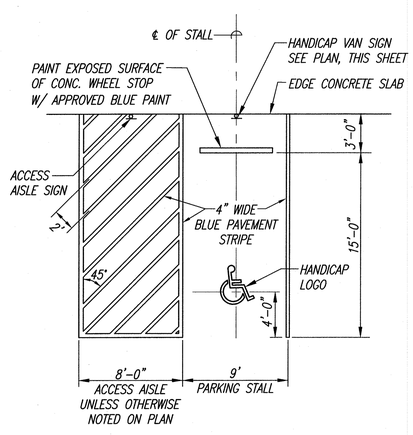

HANDICAP PARKING STALL MARKINGS DETAIL
NOT TO SCALE



HANDICAP VAN SIGN
NOT TO SCALE

ACCESS AISLE SIGN
NOT TO SCALE

10 5 0 10 20
Graphic Scale in Feet

ANSON M. MURAYAMA
LICENSED PROFESSIONAL ENGINEER
No. 6975-C
HAWAII, U.S.A.

THIS WORK WAS PREPARED BY ME OR UNDER MY SUPERVISION. CONSTRUCTION OF THIS PROJECT WILL BE UNDER MY OBSERVATION. LICENSE EXPIRATION DATE: 04/30/14

REVISION DATE	DESCRIPTION	MADE BY	APPROVED

cp&e Community Planning and Engineering, Inc.
Engineering Design | Construction Management | Infrastructure Planning
1286 Queen Emma Street Honolulu, Hawaii

EAST KAPOLEI II DEVELOPMENT INCREMENT 2B
HONOULULI, EWA, OAHU, HAWAII
(DPP SUBD. FILE NO. 2011/SUB-155)
OWNER & DEVELOPER: DEPARTMENT OF HAWAIIAN HOME LANDS
TAX MAP KEY: 9-1-17: Portion 110

MAIL BOX CENTER SIGN AND STRIPING PLAN

DRAWN BY: LYLT	ENGINEER: SS	CHECKED BY: AMM

APPROVED:

DWG. NO. **C-21** SHEET 22 OF 78 SHEETS

FILE	POCKET	FOLDER	NO.

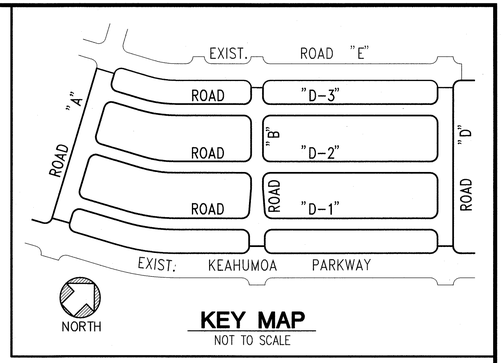

KEY MAP
NOT TO SCALE

CURB RETURNS
SCALE: 1" = 20'

Graphic Scale in Feet: 20 10 0 20 40

CURB DATA	
CURVE	①
△	90°00'00"
△/2	45°00'00"
R	28.00'
T	28.00'
C	39.60'
L	43.98'

ANSON M. MURAYAMA
LICENSED PROFESSIONAL ENGINEER
No. 6975-C
HAWAII, U.S.A.

THIS WORK WAS PREPARED BY ME OR UNDER MY SUPERVISION. CONSTRUCTION OF THIS PROJECT WILL BE UNDER MY OBSERVATION. LICENSE EXPIRATION DATE: 04/30/14

REVISION DATE	DESCRIPTION	MADE BY	APPROVED

Community Planning and Engineering, Inc.
Engineering Design | Construction Management | Infrastructure Planning
1286 Queen Emma Street Honolulu, Hawaii

EAST KAPOLEI II DEVELOPMENT INCREMENT 2B
HONOULULI, EWA, OAHU, HAWAII
(DPP SUBD. FILE NO. 2011/SUB-155)
OWNER & DEVELOPER: DEPARTMENT OF HAWAIIAN HOME LANDS
TAX MAP KEY: 9-1-17: Portion 110

CURB RETURNS

DRAWN BY: LYLT	ENGINEER: SS	CHECKED BY: AMM

APPROVED:

CHIEF, CIVIL ENGINEERING BRANCH, D.P.P. DATE 6/26/13

CHIEF, TRAFFIC REVIEW BRANCH, D.P.P. DATE 6/26/13

DWG. NO. C-22 SHEET 23 OF 78 SHEETS

FILE	POCKET	FOLDER	NO.

P:\Land Projects\DHHL East Kapolei II\Increment II-B\Construction Drawings\Government Review #3\CURB RETURNS GR#3.dwg, 23 CURB RETURNS, 3/13/2013 2:40:56 PM, 1:1

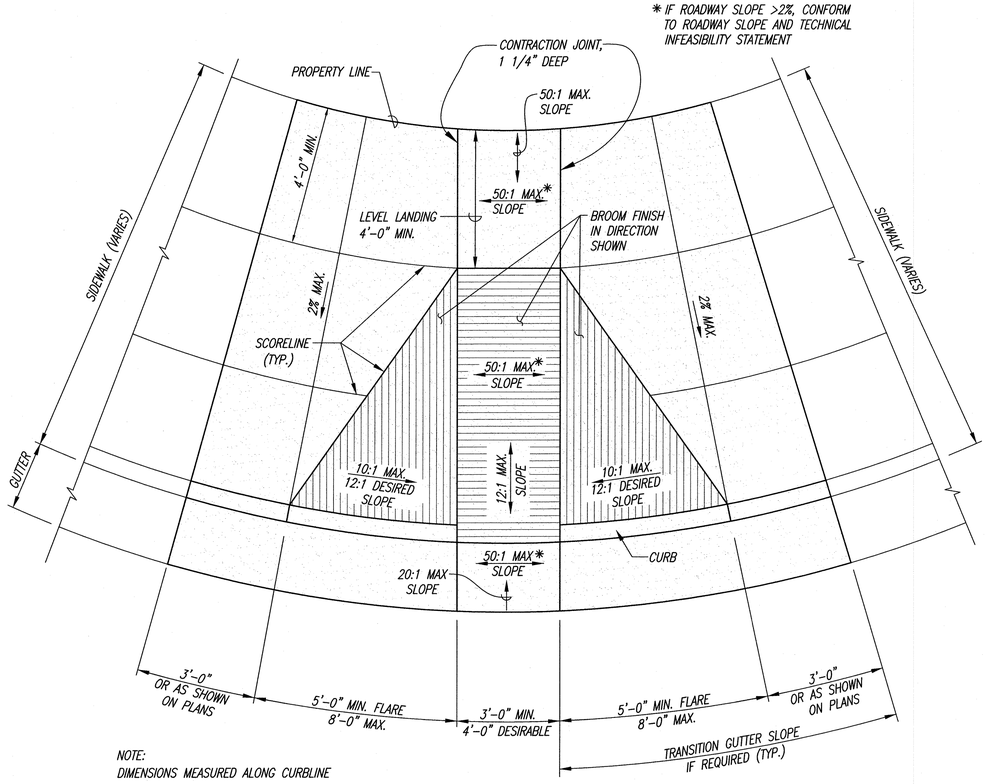

NOTE:
DIMENSIONS MEASURED ALONG CURBLINE

PLAN
NOT TO SCALE

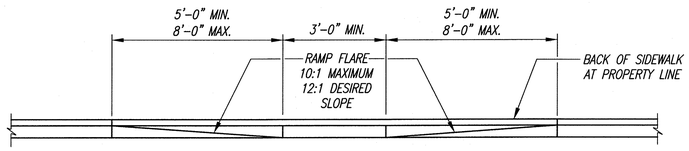

ELEVATION
NOT TO SCALE

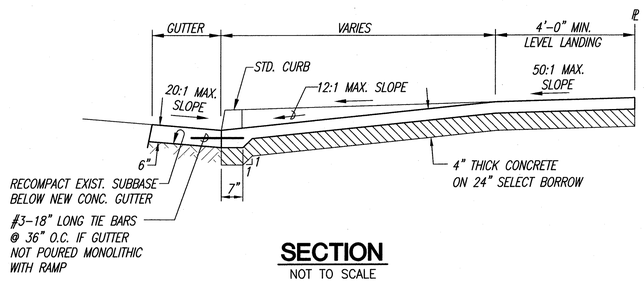

SECTION
NOT TO SCALE

CURB RAMP - TYPE "A"
NOT TO SCALE

CURB RAMP GENERAL NOTES

1. THE CONSTRUCTION TOLERANCES FOR ADA CURB RAMP SLOPES PROVIDED IN THE SP SECTION FOR CURB RAMPS, WILL BE APPLIED, AS APPLICABLE, TO THE SLOPES REFLECTED ON THE PROJECT'S CURB RAMP DETAILS.
2. FOR CURB RAMPS AT CURB RETURNS, INSTALL EXPANSION JOINTS PER STANDARD DETAIL R-27, FULL WIDTH SIDEWALK AT CURB RETURN. EXPANSION JOINTS WILL NOT BE MEASURED SEPARATELY FOR PAYMENT. EXPANSION JOINTS SHALL BE CONSIDERED INCIDENTAL TO THE CURB RAMP CONTRACT ITEMS.
3. WHEN DIRECTED BY THE ENGINEER, SIDEWALK TRANSITION AREA SHALL BE EXTENDED BEYOND SHOWN PLAN LIMITS TO MATCH THE NEAREST SCORELINE.

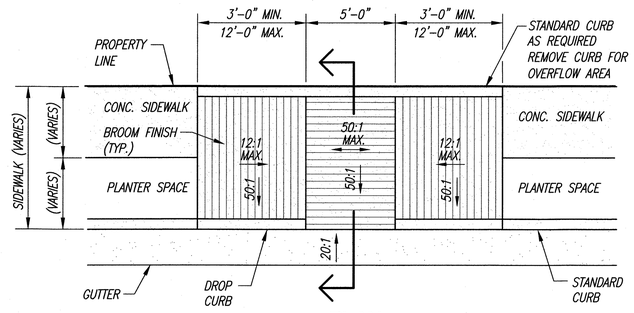

PLAN
SCALE: 1/8"=1'-0"

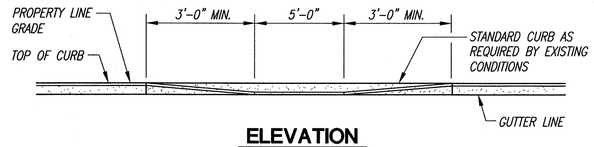

ELEVATION
SCALE: 1/8"=1'-0"

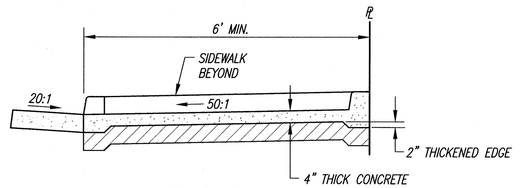

SECTION
SCALE: 1/4"=1'-0"

CURB RAMP - TYPE "B"
SCALE: AS SHOWN

REVISION DATE	DESCRIPTION	MADE BY	APPROVED

Community Planning and Engineering, Inc.
Engineering Design | Construction Management | Infrastructure Planning
1286 Queen Emma Street Honolulu, Hawaii

EAST KAPOLEI II DEVELOPMENT INCREMENT 2B

HONOULIULI, EWA, OAHU, HAWAII
(DPP SUBD. FILE NO. 2011/SUB-155)
OWNER & DEVELOPER: DEPARTMENT OF HAWAIIAN HOME LANDS
TAX MAP KEY: 9-1-17: Portion 110

TYPICAL CURB RAMP DETAILS

DRAWN BY: LYLT	ENGINEER: SS	CHECKED BY: AMM

APPROVED:

M. [illegible] 6/28/13
CHIEF, CIVIL ENGINEERING BRANCH, D.P.P. DATE

ANSON M. MURAYAMA
LICENSED PROFESSIONAL ENGINEER
No. 6975-C
HAWAII, U.S.A.

THIS WORK WAS PREPARED BY ME OR UNDER MY SUPERVISION. CONSTRUCTION OF THIS PROJECT WILL BE UNDER MY OBSERVATION. LICENSE EXPIRATION DATE: 04/30/14

FILE	POCKET	FOLDER	NO.

DWG. NO. C-23 SHEET 24 OF 78 SHEETS

P:\Land Projects\DHHL East Kapolei II\Increment II-B\Construction Drawings\Government Review #3\TYPICAL CURB RAMP DETAILS GR#3.dwg, 24 TYPICAL CURB RAMP DETAILS, 3/13/2013 2:44:18 PM, 1:1

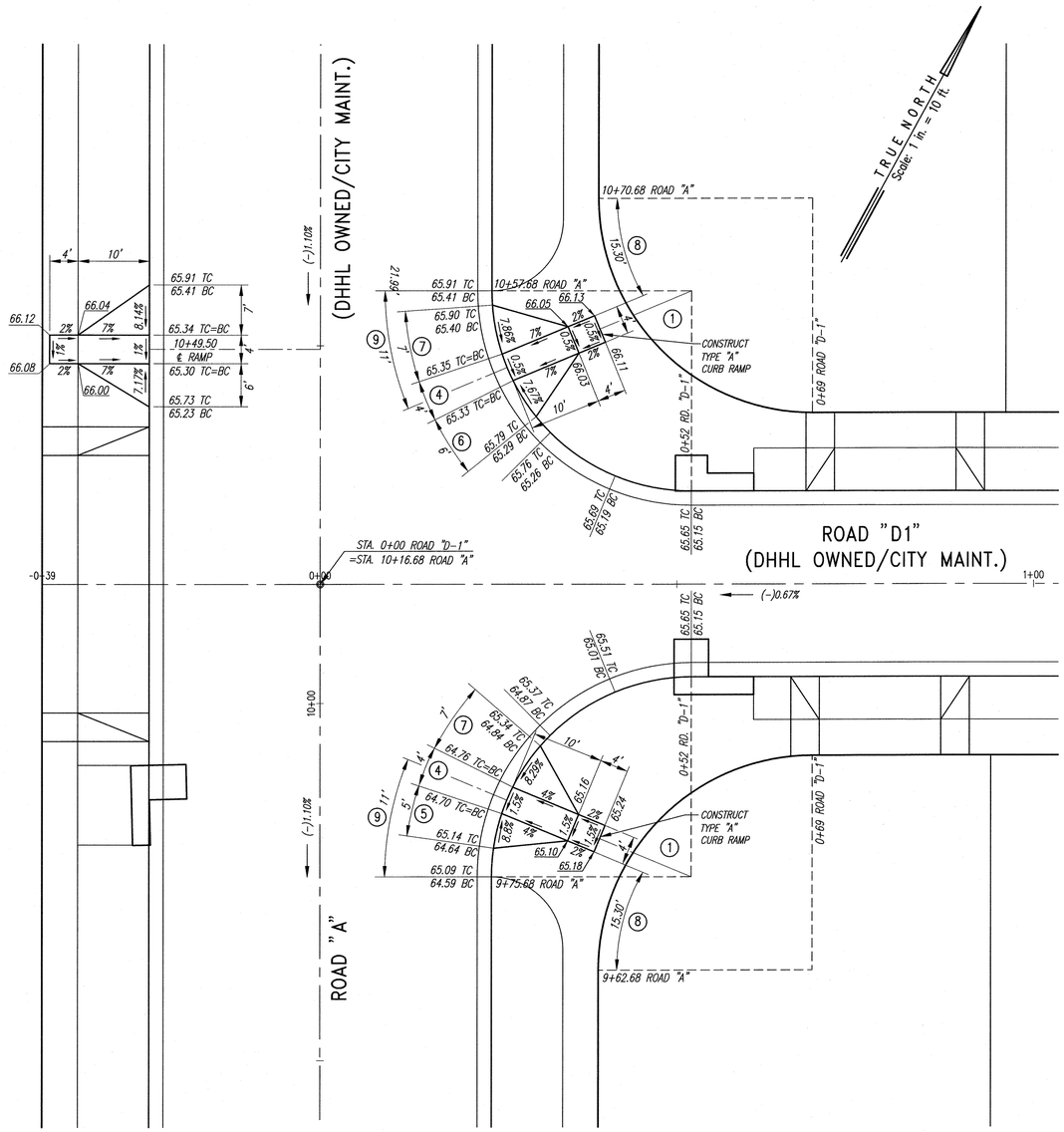

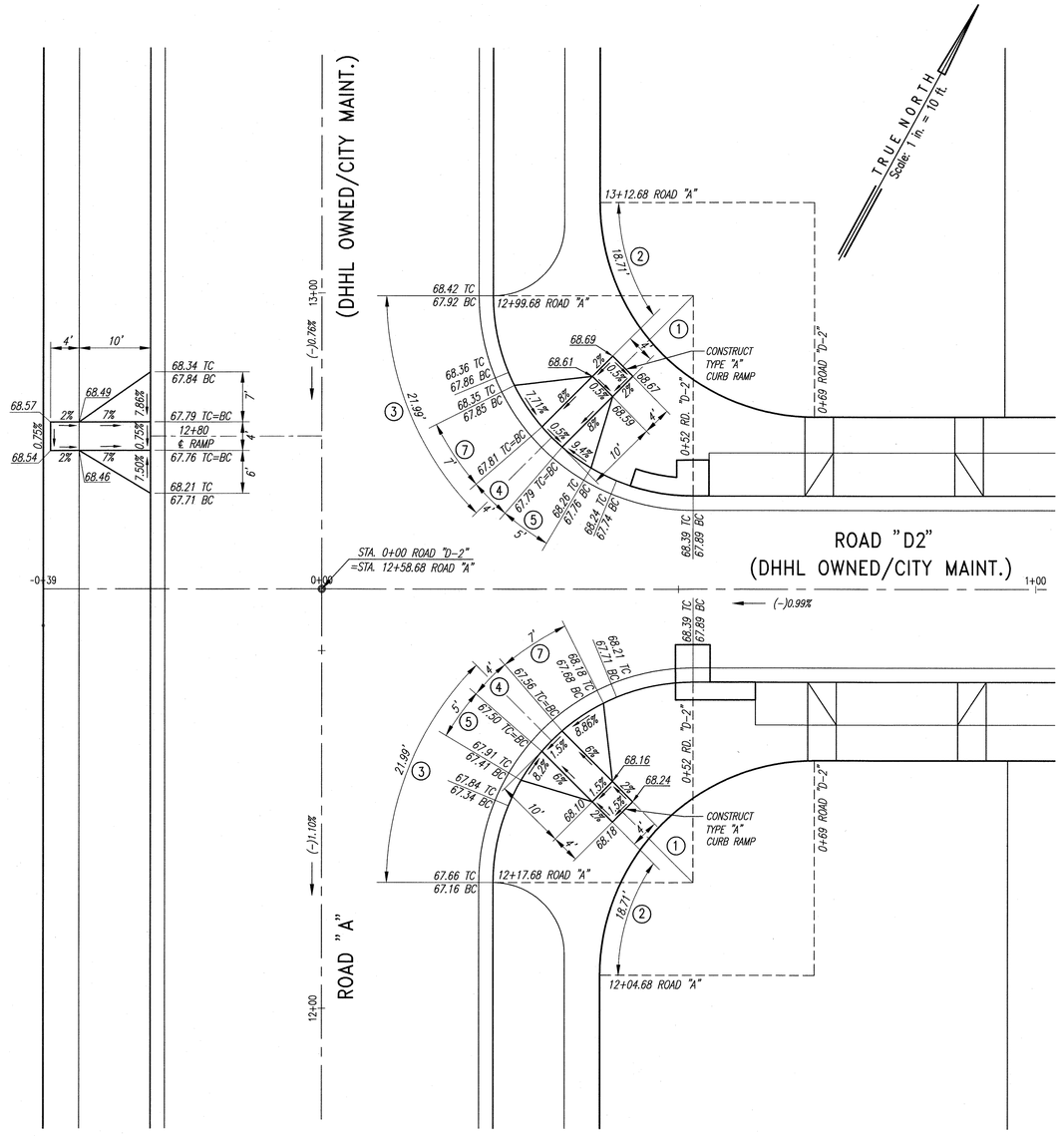

CURVE DATA										
CURVE	①	②	③	④	⑤	⑥	⑦	⑧	⑨	CURVE
△	90°00'00"	35°44'17"	45°00'00"	8°11'32"	10°13'53"	12°16'40"	14°19'26"	29°13'25"	22°30'00"	△
△/2	45°00'00"	17°52'08.5"	22°30'00"	4°05'46"	5°06'56.5"	6°08'20"	7°09'43"	14°36'42.5"	11°15'00"	△/2
R	28.00'	30.00'	28.00'	28.00'	28.00'	28.00'	28.00'	30.00'	28.00'	R
T	28.00'	9.67'	11.60'	2.00'	2.51'	3.01'	3.52'	7.82'	5.57'	T
C	39.60'	18.41'	24.43'	4.00'	5.00'	5.99'	6.98'	15.14'	10.93'	C
L	43.98'	18.71'	21.99'	4.00'	5.00'	6.00'	7.00'	15.30'	11.00'	L

Graphic Scale in Feet
10 5 0 10 20

ANSON M. MURAYAMA
LICENSED PROFESSIONAL ENGINEER
No. 6975-C
HAWAII, U.S.A.

THIS WORK WAS PREPARED BY ME OR UNDER MY SUPERVISION. CONSTRUCTION OF THIS PROJECT WILL BE UNDER MY OBSERVATION. LICENSE EXPIRATION DATE: 04/30/14

REVISION DATE	DESCRIPTION	MADE BY	APPROVED

cp&e Community Planning and Engineering, Inc.
Engineering Design | Construction Management | Infrastructure Planning
1286 Queen Emma Street Honolulu, Hawaii

EAST KAPOLEI II DEVELOPMENT INCREMENT 2B

HONOULIULI, EWA, OAHU, HAWAII
(DPP SUBD. FILE NO. 2011/SUB-155)
OWNER & DEVELOPER: DEPARTMENT OF HAWAIIAN HOME LANDS
TAX MAP KEY: 9-1-17: Portion 110

CURB RAMP DETAILS - 1

DRAWN BY: LYLT, MFN	ENGINEER: SS, HNC	CHECKED BY: AMM

APPROVED:

M. Fujiwara 6/28/13
CHIEF, CIVIL ENGINEERING BRANCH, D.P.P. DATE

FILE	POCKET	FOLDER	NO.

DWG. NO. C-24 SHEET 25 OF 78 SHEETS

P:\Land Projects\DHHL East Kapolei II\Increment II-B\Construction Drawings\Government Review #3\CURB RAMP_1 GR#3.dwg, 25 CURB RAMP_1, 3/13/2013 2:52:48 PM, 1:1

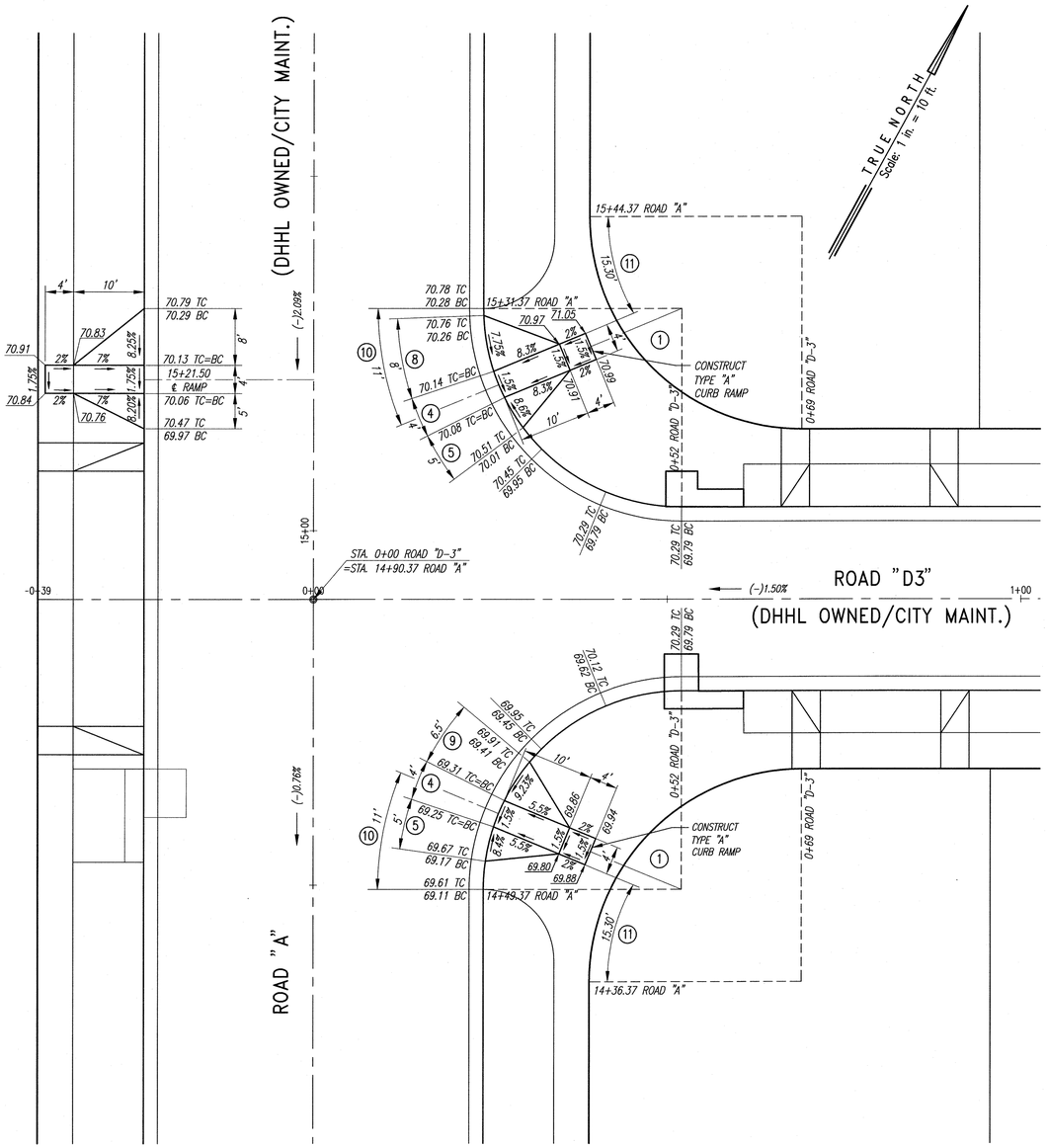

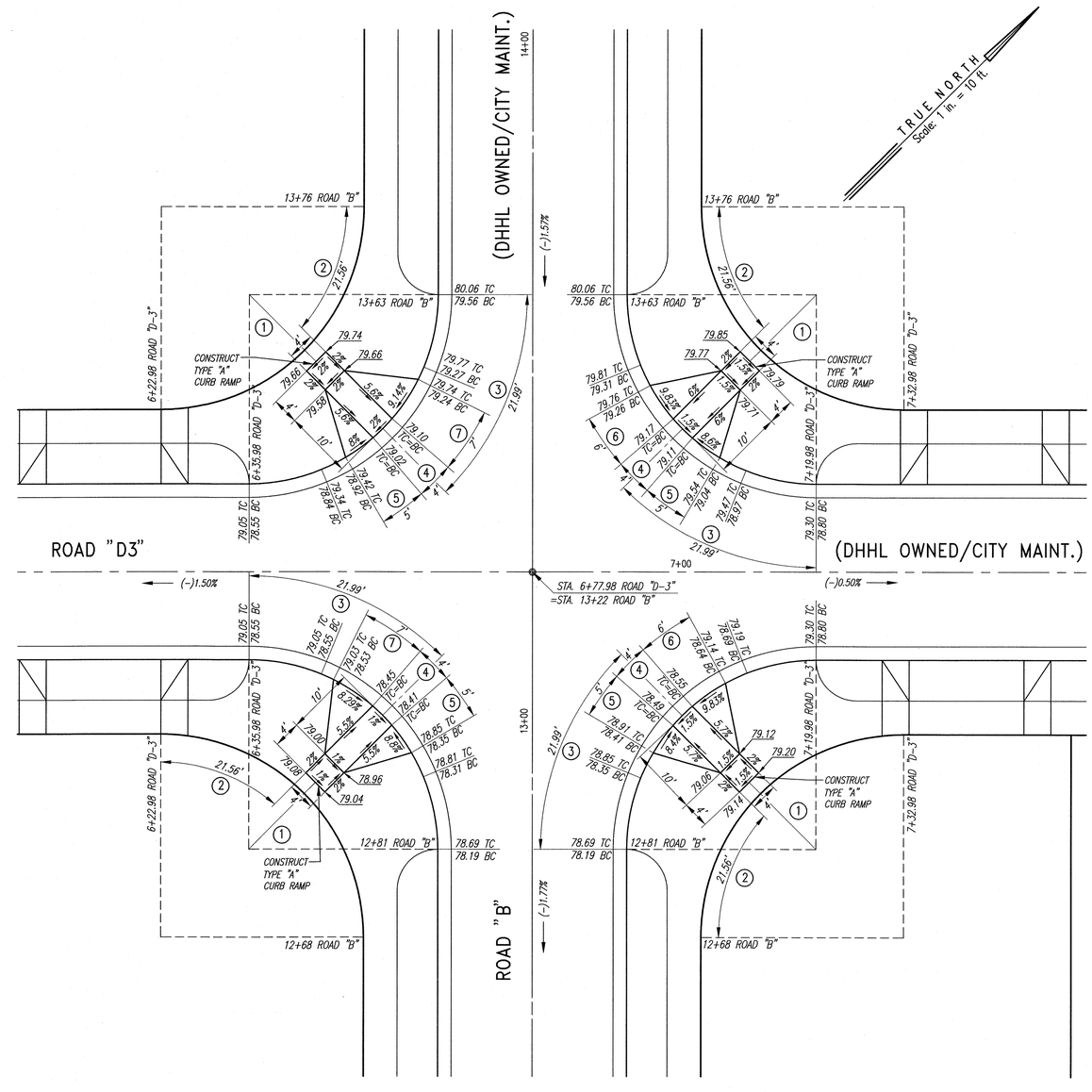

CURVE DATA												
CURVE	①	②	③	④	⑤	⑥	⑦	⑧	⑨	⑩	⑪	CURVE
△	90°00'00"	41°10'39"	45°00'00"	8°11'32"	10°13'53"	12°16'40"	14°19'26"	16°22'13"	13°18'03"	22°30'00"	29°13'25"	△
△/2	45°00'00"	20°35'19.5"	22°30'00"	4°05'46"	5°06'56.5"	6°08'20"	7°09'43"	8°11'06.5"	6°39'01.5"	11°15'00"	14°36'42.5"	△/2
R	28.00'	30.00'	28.00'	28.00'	28.00'	28.00'	28.00'	28.00'	28.00'	28.00'	30.00'	R
T	28.00'	11.27'	11.60'	2.00'	2.51'	3.01'	3.52'	4.03'	3.26'	5.57'	7.82'	T
C	39.60'	21.10'	24.43'	4.00'	5.00'	5.99'	6.98'	7.97'	6.49'	10.93'	15.14'	C
L	43.98'	21.56'	21.99'	4.00'	5.00'	6.00'	7.00'	8.00'	6.50'	11.00'	15.30'	L

Graphic Scale in Feet
10 5 0 10 20

ANSON M. MURAYAMA
LICENSED PROFESSIONAL ENGINEER
No. 6975-C
HAWAII, U.S.A.

THIS WORK WAS PREPARED BY ME OR UNDER MY SUPERVISION. CONSTRUCTION OF THIS PROJECT WILL BE UNDER MY OBSERVATION. LICENSE EXPIRATION DATE: 04/30/14

REVISION DATE	DESCRIPTION	MADE BY	APPROVED

cp&e Community Planning and Engineering, Inc.
Engineering Design | Construction Management | Infrastructure Planning
1286 Queen Emma Street Honolulu, Hawaii

EAST KAPOLEI II DEVELOPMENT INCREMENT 2B

HONOULIULI, EWA, OAHU, HAWAII
(DPP SUBD. FILE NO. 2011/SUB-155)
OWNER & DEVELOPER: DEPARTMENT OF HAWAIIAN HOME LANDS
TAX MAP KEY: 9-1-17: Portion 110

CURB RAMP DETAILS - 2

DRAWN BY:	LYLT, MFN	ENGINEER:	SS, HNC	CHECKED BY:	AMM

APPROVED:

6/28/13
CHIEF, CIVIL ENGINEERING BRANCH, D.P.P. DATE

DWG. NO. C-25 SHEET 26 OF 78 SHEETS

FILE	POCKET	FOLDER	NO.

P:\Land Projects\DHHL East Kapolei II\Increment II-B\Construction Drawings\Government Review #3\CURB RAMP_2 GR#3.dwg, 26 CURB RAMP_2, 3/14/2013 2:28:55 PM, 1:1

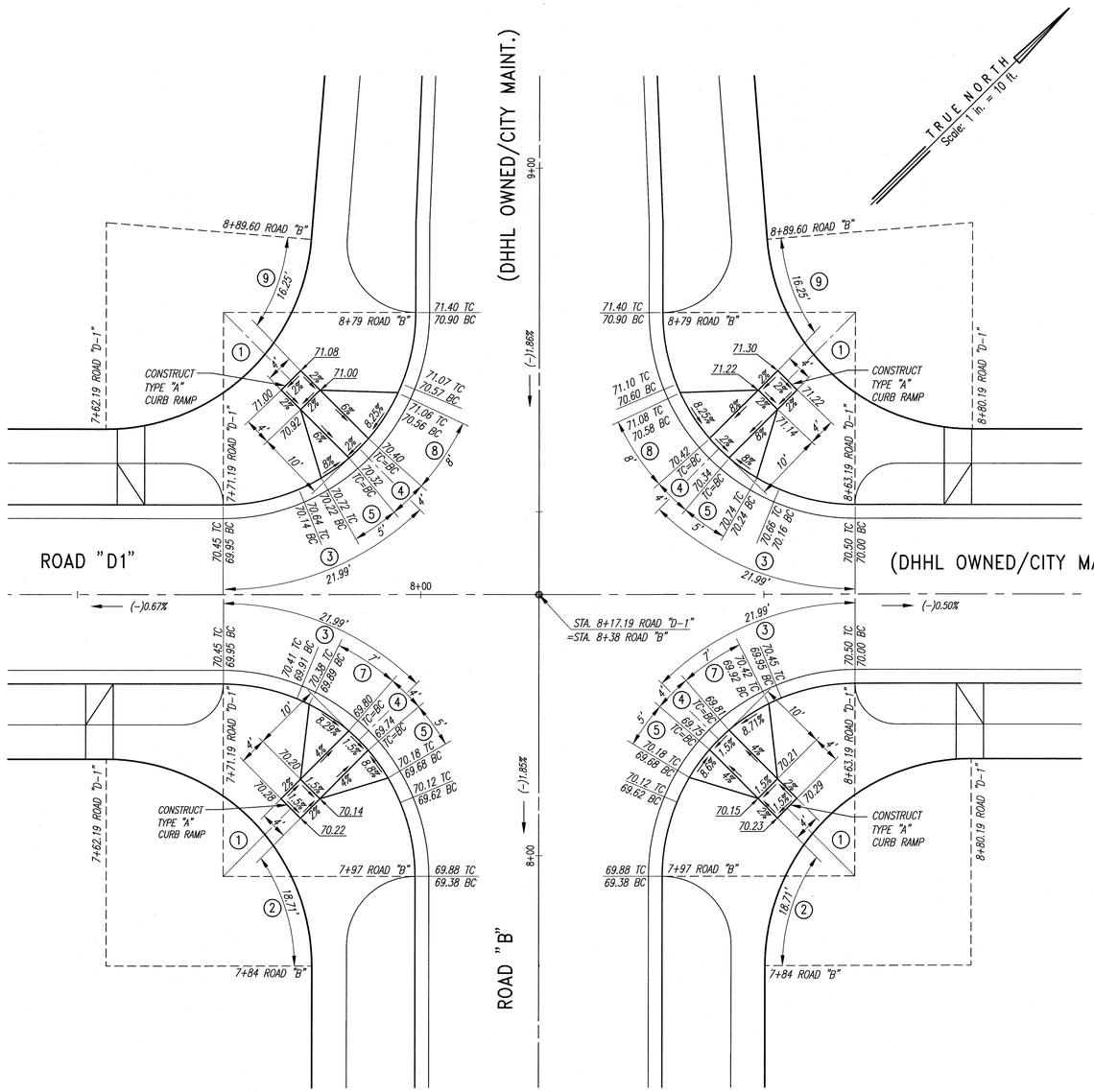

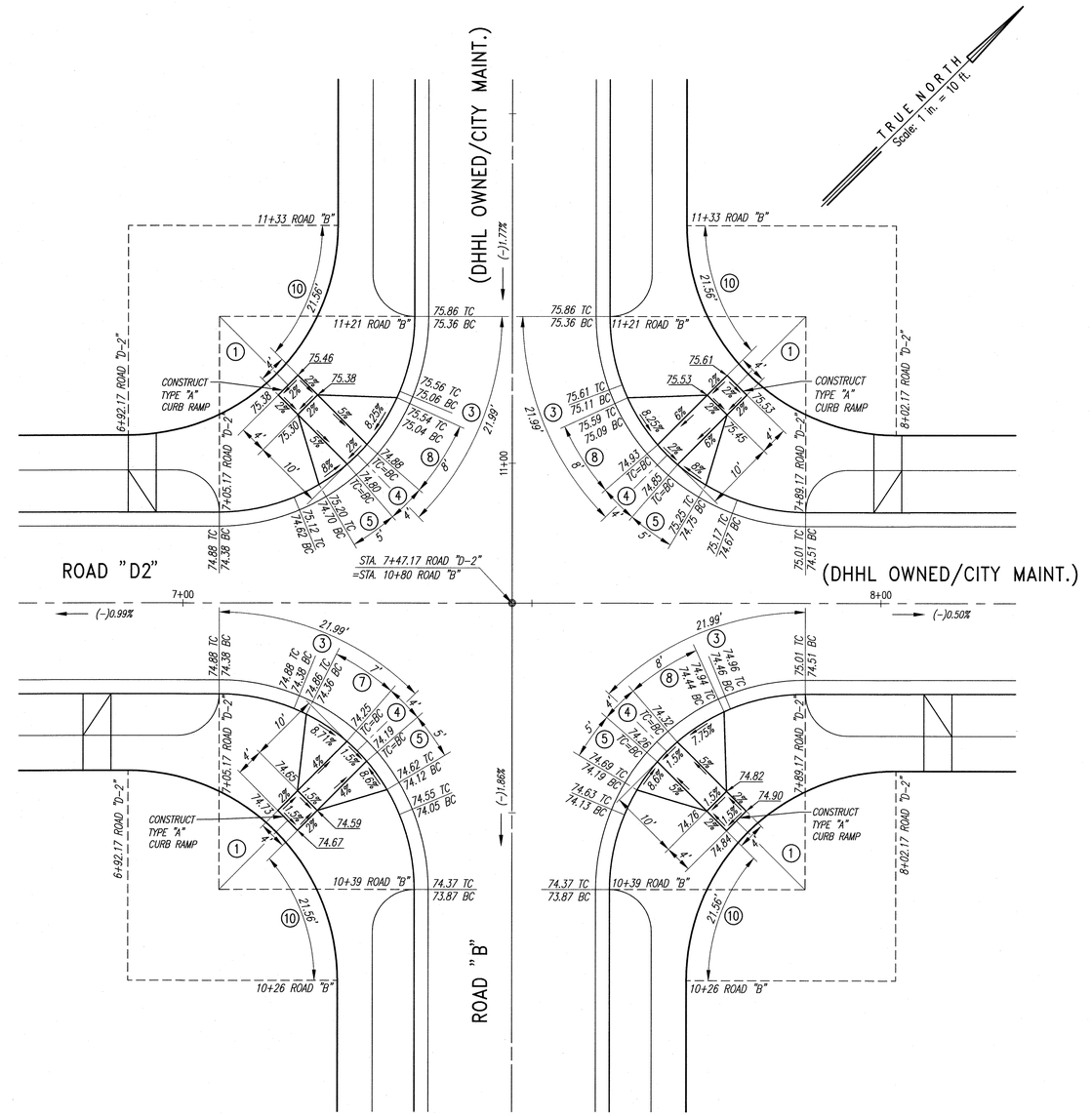

CURVE DATA										
CURVE	①	②	③	④	⑤	⑦	⑧	⑨	⑩	CURVE
△	90°00'00"	35°44'17"	45°00'00"	8°11'32"	10°13'53"	14°19'26"	16°22'13"	31°01'59"	41°10'39"	△
△/2	45°00'00"	17°52'08.5"	22°30'00"	4°05'46"	5°06'56.5"	7°09'43"	8°11'06.5"	15°30'59.5"	20°35'19.5"	△/2
R	28.00'	30.00'	28.00'	28.00'	28.00'	28.00'	28.00'	30.00'	30.00'	R
T	28.00'	9.67'	11.60'	2.00'	2.51'	3.52'	4.03'	8.33'	11.27'	T
C	39.60'	18.41'	24.43'	4.00'	5.00'	6.98'	7.97'	16.05'	21.10'	C
L	43.98'	18.71'	21.99'	4.00'	5.00'	7.00'	8.00'	16.25'	21.56'	L

10 5 0 10 20
Graphic Scale in Feet

ANSON M. MURAYAMA
LICENSED PROFESSIONAL ENGINEER
No. 6975-C
HAWAII, U.S.A.

THIS WORK WAS PREPARED BY ME OR UNDER MY SUPERVISION. CONSTRUCTION OF THIS PROJECT WILL BE UNDER MY OBSERVATION. LICENSE EXPIRATION DATE: 04/30/14

REVISION DATE	DESCRIPTION	MADE BY	APPROVED

cp&e Community Planning and Engineering, Inc.
Engineering Design | Construction Management | Infrastructure Planning
1286 Queen Emma Street Honolulu, Hawaii

EAST KAPOLEI II DEVELOPMENT INCREMENT 2B

HONOULIULI, EWA, OAHU, HAWAII

(DPP SUBD. FILE NO. 2011/SUB-155)
OWNER & DEVELOPER: DEPARTMENT OF HAWAIIAN HOME LANDS
TAX MAP KEY: 9-1-17: Portion 110

CURB RAMP DETAILS - 3

DRAWN BY:	LYLT, MFN	ENGINEER:	SS, HNC	CHECKED BY:	AMM

APPROVED:

M. 6/28/13
CHIEF, CIVIL ENGINEERING BRANCH, D.P.P. DATE

FILE	POCKET	FOLDER	NO.

DWG. NO. C-26 SHEET 27 OF 78 SHEETS

P:\Land Projects\DHHL East Kapolei II\Increment II-B\Construction Drawings\Government Review #3\CURB RAMP_3 GR#3.dwg, 27 CURB RAMP_3, 3/13/2013 2:58:04 PM, 1:1

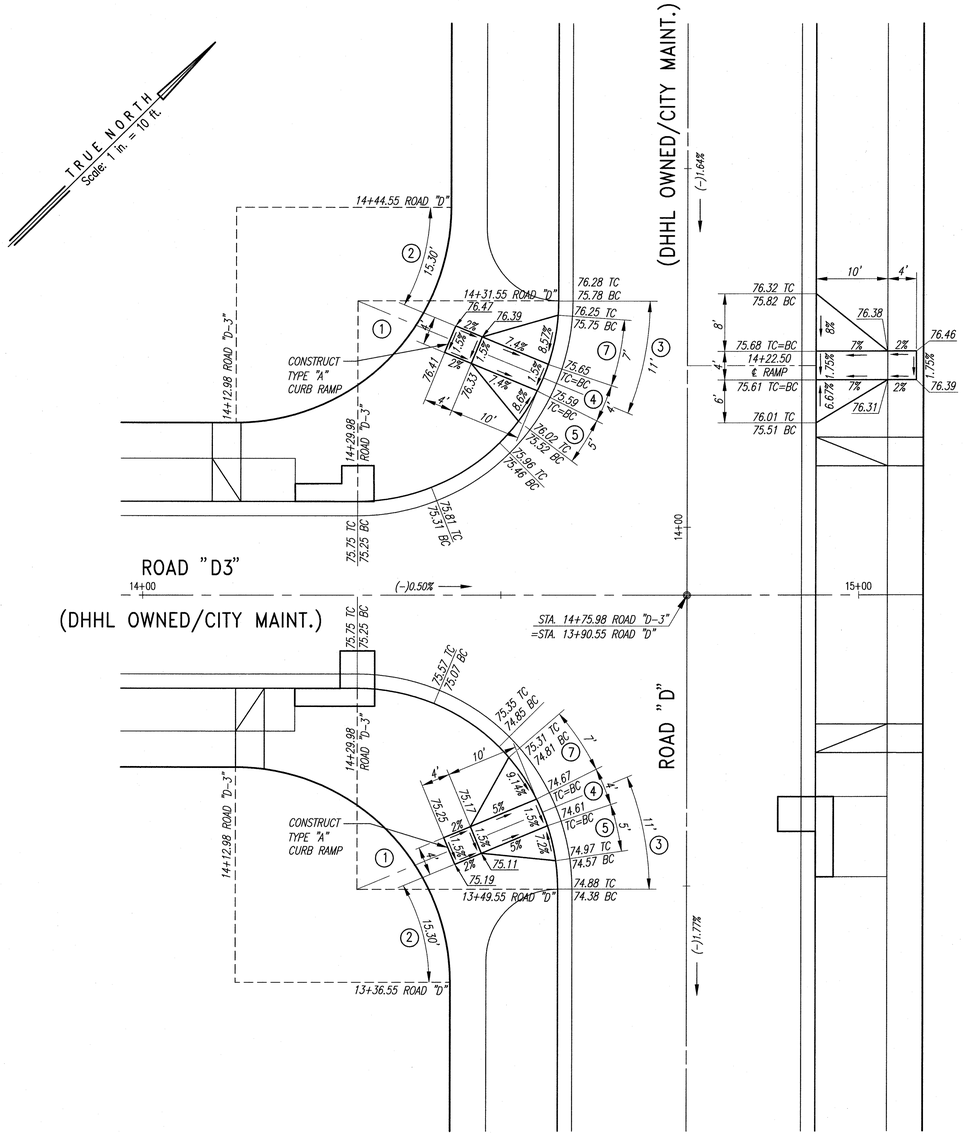

CURVE DATA							
CURVE	①	②	③	④	⑤	⑦	CURVE
△	90°00'00"	29°13'25"	22°30'00"	8°11'32"	10°13'53"	14°19'26"	△
△/2	45°00'00"	14°36'42.5"	11°15'00"	4°05'46"	5°06'56.5"	7°09'43"	△/2
R	28.00'	30.00'	28.00'	28.00'	28.00'	28.00'	R
T	28.00'	7.82'	5.57'	2.00'	2.51'	3.52'	T
C	39.60'	15.14'	10.93'	4.00'	5.00'	6.98'	C
L	43.98'	15.30'	11.00'	4.00'	5.00'	7.00'	L

10 5 0 10 20
Graphic Scale in Feet

ANSON M. MURAYAMA
LICENSED PROFESSIONAL ENGINEER
No. 6975-C
HAWAII, U.S.A.

THIS WORK WAS PREPARED BY ME OR UNDER MY SUPERVISION. CONSTRUCTION OF THIS PROJECT WILL BE UNDER MY OBSERVATION. LICENSE EXPIRATION DATE: 04/30/14

REVISION DATE	DESCRIPTION	MADE BY	APPROVED

cp&e Community Planning and Engineering, Inc.
Engineering Design | Construction Management | Infrastructure Planning
1286 Queen Emma Street Honolulu, Hawaii

EAST KAPOLEI II DEVELOPMENT INCREMENT 2B

HONOULIULI, EWA, OAHU, HAWAII
(DPP SUBD. FILE NO. 2011/SUB-155)
OWNER & DEVELOPER: DEPARTMENT OF HAWAIIAN HOME LANDS
TAX MAP KEY: 9-1-17: Portion 110

CURB RAMP DETAILS - 5

DRAWN BY:	ENGINEER:	CHECKED BY:
LYLT, MFN	SS, HNC	AMM

APPROVED:

M. [signature] 6/28/13
CHIEF, CIVIL ENGINEERING BRANCH, D.P.P. DATE

DWG. NO. C-28 SHEET 29 OF 78 SHEETS

FILE	POCKET	FOLDER	NO.

P:\Land Projects\DHHL East Kapolei II\Increment II-B\Construction Drawings\Government Review #3\CURB RAMP_5 GR#3.dwg, 29 CURB RAMP_5, 3/13/2013 3:01:59 PM, 1:1

P:\Land Projects\DHHL East Kapolei II\Increment I-B\Construction Drawings\Government Review #3\TRAFFIC SIGNS AND PAVEMENT MARKING PLAN_1_GR#3.dwg, 29-TRAFFIC SIGNS AND PAVEMENT MARKING PLAN_1, 3/13/2013 3:12:19 PM, 1:1

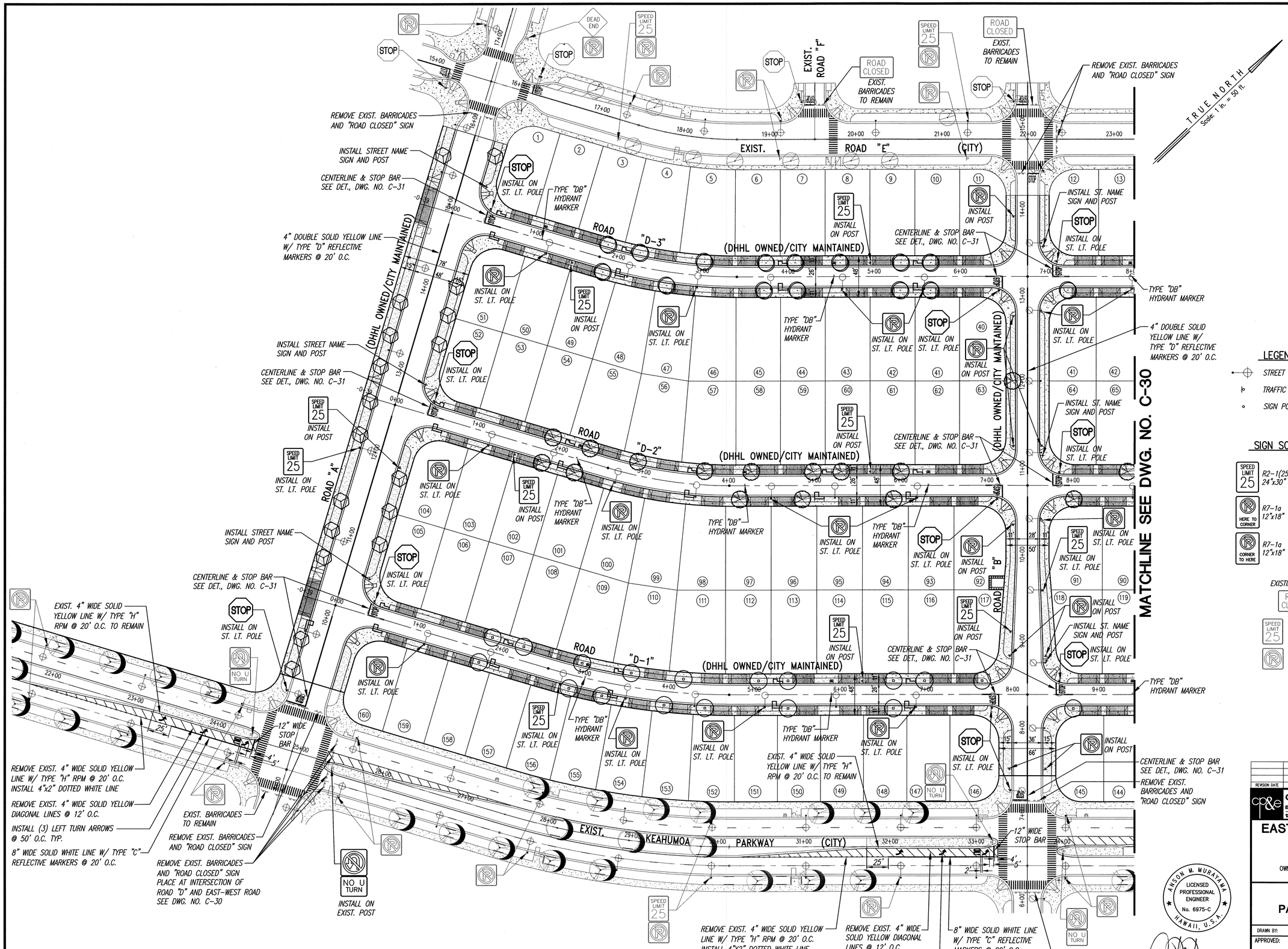

TRAFFIC SIGNS AND PAVEMENT MARKING PLAN - 1

SCALE: 1"=50'

REVISION DATE	DESCRIPTION	MADE BY	APPROVED

cp&e **Community Planning and Engineering, Inc.**
Engineering Design | Construction Management | Infrastructure Planning
1286 Queen Emma Street Honolulu, Hawaii

EAST KAPOLEI II DEVELOPMENT INCREMENT 2B

HONOULIULI, EWA, OAHU, HAWAII

(DPP SUBD. FILE NO. 2011/SUB-155)
OWNER & DEVELOPER: DEPARTMENT OF HAWAIIAN HOME LANDS
TAX MAP KEY: 9-1-17: Portion 110

TRAFFIC SIGNS AND PAVEMENT MARKING PLAN - 1

DRAWN BY: LYLT	ENGINEER: SS	CHECKED BY: AMM

APPROVED:

CHIEF, TRAFFIC REVIEW BRANCH, DPP DATE

ANSON M. MURAYAMA LICENSED PROFESSIONAL ENGINEER No. 6975-C HAWAII, U.S.A.

THIS WORK WAS PREPARED BY ME OR UNDER MY SUPERVISION. CONSTRUCTION OF THIS PROJECT WILL BE UNDER MY OBSERVATION. LICENSE EXPIRATION DATE: 04/30/14

DWG. NO. C-29 SHEET 30 OF 78 SHEETS

FILE	POCKET	FOLDER	NO.

P:\Land Projects\DHHL East Kapolei II\Increment I-B\Construction Drawings\Government Review #3\TRAFFIC SIGNS AND PAVEMENT MARKING PLAN_1_GR#3.dwg, 29-TRAFFIC SIGNS AND PAVEMENT MARKING PLAN_1, 3/13/2013 3:12:19 PM, 1:1

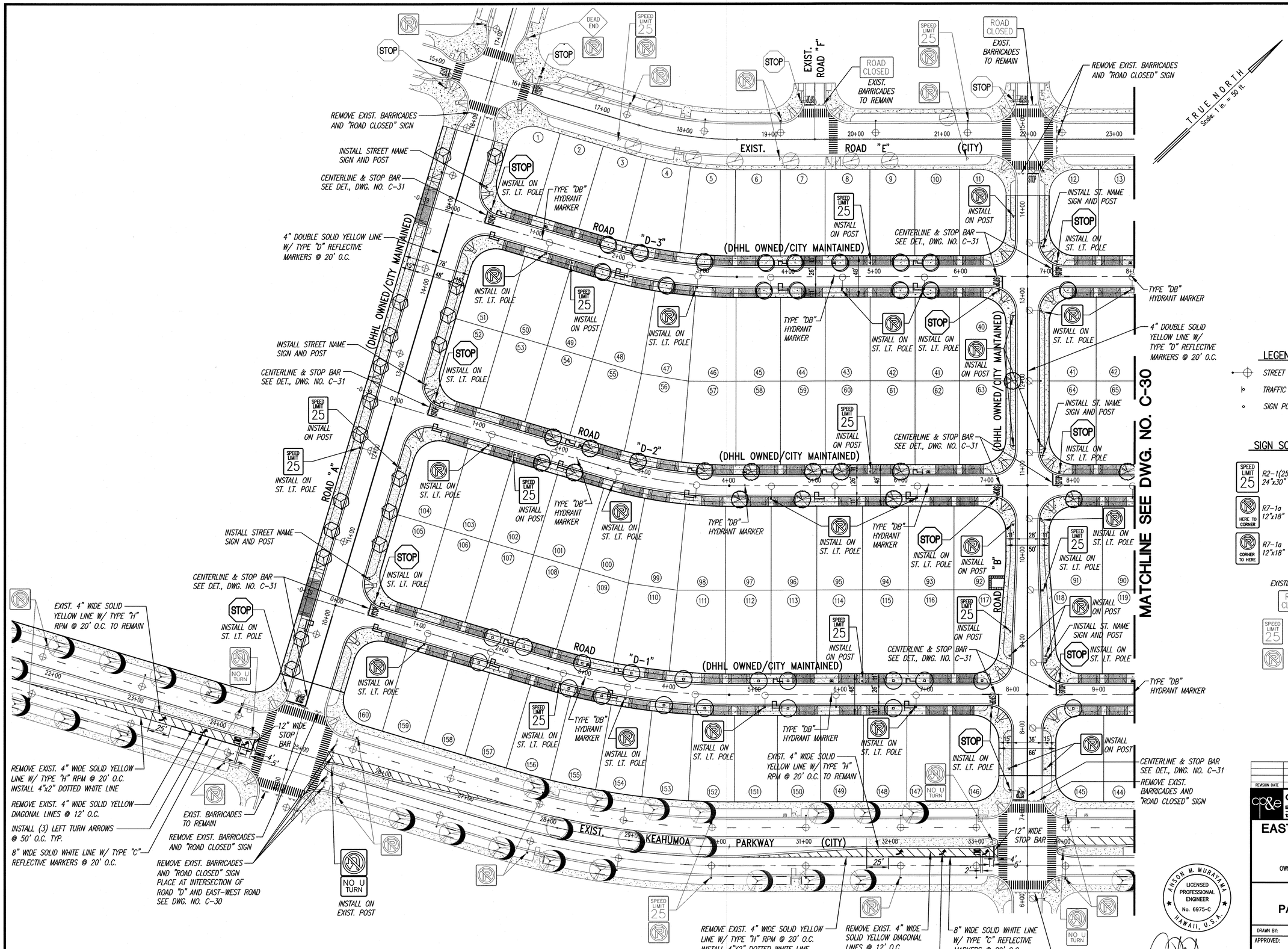

TRAFFIC SIGNS AND PAVEMENT MARKING PLAN - 1

SCALE: 1"=50'

REVISION DATE	DESCRIPTION	MADE BY	APPROVED

cp&e **Community Planning and Engineering, Inc.**
Engineering Design | Construction Management | Infrastructure Planning
1286 Queen Emma Street Honolulu, Hawaii

EAST KAPOLEI II DEVELOPMENT INCREMENT 2B

HONOULIULI, EWA, OAHU, HAWAII

(DPP SUBD. FILE NO. 2011/SUB-155)
OWNER & DEVELOPER: DEPARTMENT OF HAWAIIAN HOME LANDS
TAX MAP KEY: 9-1-17: Portion 110

TRAFFIC SIGNS AND PAVEMENT MARKING PLAN - 1

DRAWN BY: LYLT	ENGINEER: SS	CHECKED BY: AMM

APPROVED:

CHIEF, TRAFFIC REVIEW BRANCH, DPP DATE

ANSON M. MURAYAMA LICENSED PROFESSIONAL ENGINEER No. 6975-C HAWAII, U.S.A.

THIS WORK WAS PREPARED BY ME OR UNDER MY SUPERVISION. CONSTRUCTION OF THIS PROJECT WILL BE UNDER MY OBSERVATION. LICENSE EXPIRATION DATE: 04/30/14

DWG. NO. C-29 SHEET 30 OF 78 SHEETS

FILE	POCKET	FOLDER	NO.

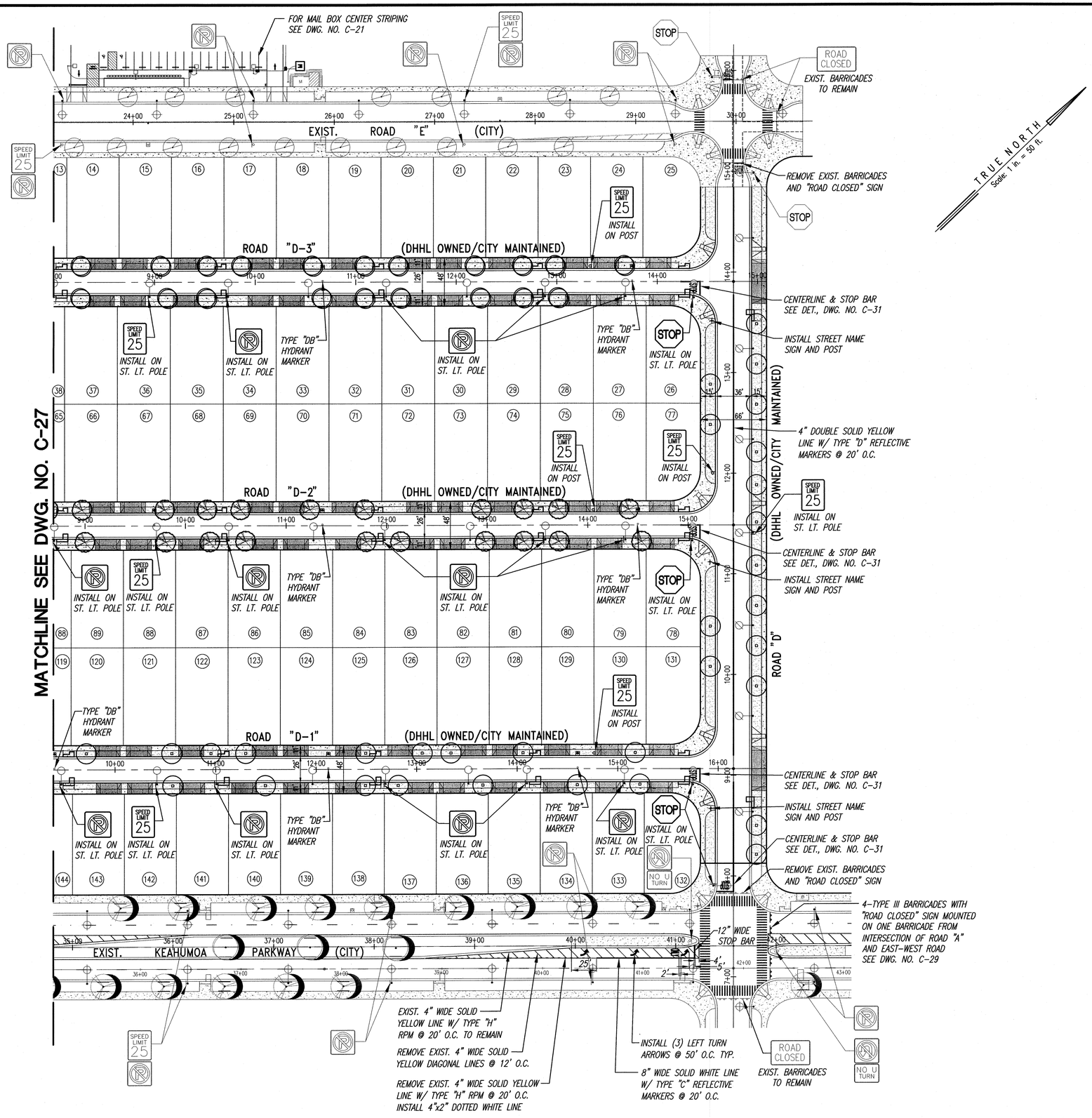

TRAFFIC SIGNS AND PAVEMENT MARKING PLAN - 2

SCALE: 1"=50'

LEGEND

- STREET LIGHT (ST. LT.)
- TRAFFIC SIGN W/ POST
- SIGN POST ONLY (AS NOTED)

SIGN SCHEDULE

R7-1a 12"x18" HERE TO CORNER		STOP R1-1 30"x30"	
R7-1a 12"x18" CORNER TO HERE		SPEED LIMIT 25 R2-1(25) 24"x30"	
ROAD CLOSED R11.2 48"x30"		R8-3a 12"x12" (FOR 48' & 50' R/W STREETS) 24"x24" (FOR 66' & 78' R/W STREETS)	

EXISTING SIGNS

ROAD CLOSED

SPEED LIMIT 25

NO U TURN

50 25 0 50 100

Graphic Scale in Feet

ANSON M. MURAYAMA LICENSED PROFESSIONAL ENGINEER No. 6975-C HAWAII, U.S.A.

THIS WORK WAS PREPARED BY ME OR UNDER MY SUPERVISION. CONSTRUCTION OF THIS PROJECT WILL BE UNDER MY OBSERVATION. LICENSE EXPIRATION DATE: 04/30/14

REVISION DATE	DESCRIPTION	MADE BY	APPROVED

Community Planning and Engineering, Inc.
Engineering Design | Construction Management | Infrastructure Planning
1286 Queen Emma Street Honolulu, Hawaii

EAST KAPOLEI II DEVELOPMENT INCREMENT 2B

HONOULULI, EWA, OAHU, HAWAII
(DPP SUBD. FILE NO. 2011/SUB-155)
OWNER & DEVELOPER: DEPARTMENT OF HAWAIIAN HOME LANDS
TAX MAP KEY: 9-1-17: Portion 110

TRAFFIC SIGNS AND PAVEMENT MARKING PLAN - 2

DRAWN BY: LYLT	ENGINEER: SS	CHECKED BY: ANM

APPROVED:

CHIEF, TRAFFIC REVIEW BRANCH, DPP DATE

DWG. NO. C-30 SHEET 31 OF 78 SHEETS

FILE	POCKET	FOLDER	NO.

P:\Land Projects\DHHL East Kapolei II\Increment II-B\Construction Drawings\Government Review #3\TRAFFIC SIGNS AND PAVMENT MARKING PLAN_2 GR#3.dwg, 31 TRAFFIC SIGNS AND PAVEMENT MARKING PLAN_2, 3/14/2013 2:44:10 PM, 1:1

NOTE: WHEN THIS MARKING IS USED, IT SHALL BE PLACED IN EACH LANE OF TRAFFIC APPROACHING THE INTERSECTION.

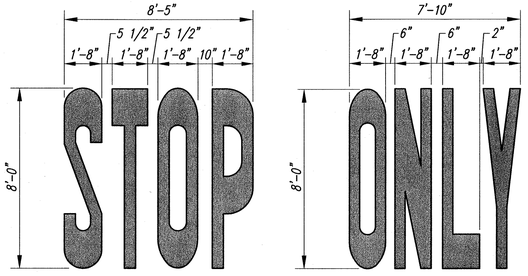

8'-0" SIZE

STANDARD DETAILS OF THE WORD "STOP" AND "ONLY"

NOT TO SCALE

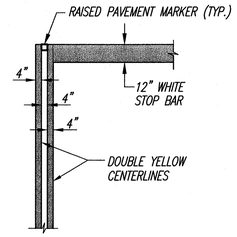

CENTERLINE AND STOP BAR DETAIL

NOT TO SCALE

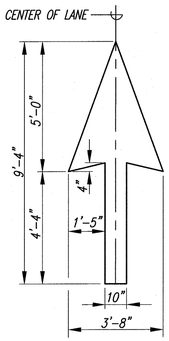

THROUGH ARROW

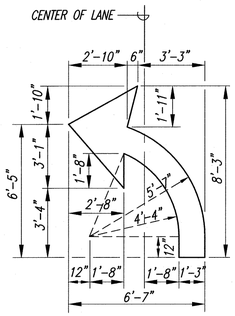

LEFT TURN ARROW

STANDARD PAVEMENT ARROWS

NOT TO SCALE

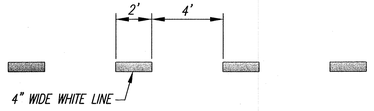

DOTTED LINE

NOT TO SCALE

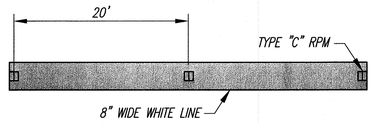

CHANNELIZING LINES

NOT TO SCALE

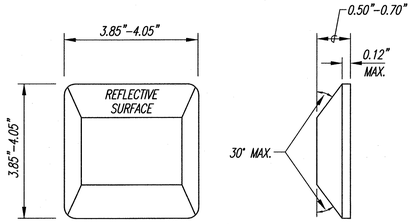

TYPE H

ONE WAY YELLOW REFLECTIVE MARKER

NOT TO SCALE

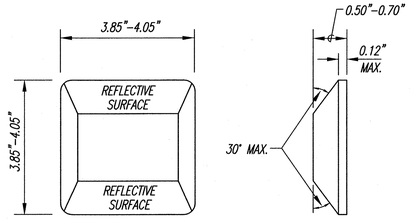

TYPE C

RED-CLEAR REFLECTIVE MARKER

NOT TO SCALE

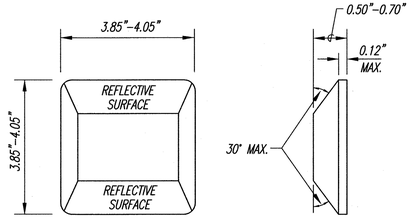

TYPE DB

TWO-WAY BLUE REFLECTIVE MARKER

NOT TO SCALE

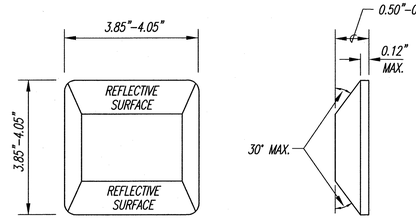

TYPE D

TWO-WAY YELLOW REFLECTIVE MARKER

NOT TO SCALE

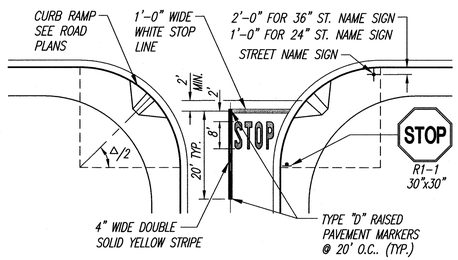

TYPICAL INTERSECTION CURB RAMP, SIGN & PAVEMENT MARKING

NOT TO SCALE

SIGNS AND MARKINGS NOTES

1. ALL TRAFFIC SIGN AND PAVEMENT MARKING INSTALLATIONS SHALL BE DONE IN ACCORDANCE WITH THE "MANUAL ON UNIFORM TRAFFIC CONTROL DEVICES FOR STREETS AND HIGHWAYS", 2009 EDITION, AS AMENDED, THE LATEST SPECIFICATIONS FROM THE TRAFFIC REVIEW BRANCH, DEPARTMENT OF PLANNING AND PERMITTING, AND AS SHOWN ON THE PLANS.
2. CONTRACTOR SHALL NOTIFY AND COORDINATE WORK WITH THE CIVIL ENGINEERING BRANCH, DEPARTMENT OF PLANNING AND PERMITTING, ONE (1) WEEK IN ADVANCE OF COMMENCING WORK AT 768-8084.
3. CONTRACTOR SHALL SUBMIT MATERIAL BROCHURES FOR ALL SIGNS AND PAINT MATERIALS TO THE TRAFFIC REVIEW BRANCH, DEPARTMENT OF PLANNING AND PERMITTING.
4. THE SIGNING AND/OR STRIPING CONTRACTOR SHALL KEEP ONE (1) SET OF APPROVED PLANS AT THE PROJECT SITE AT ALL TIMES DURING CONSTRUCTION WORK.
5. CONTRACTOR SHALL PAINT TEMPORARY GUIDELINES AND OUTLINE OF ARROWS, LEGENDS, AND CROSSWALKS WITH A TWO INCH (2") WIDE BRUSHED LINE ON THE DAY THE ROADWAY IS OPENED TO TRAFFIC. THESE MARKINGS MUST BE APPROVED BY THE INSPECTOR FROM THE TRAFFIC REVIEW BRANCH, DEPARTMENT OF PLANNING AND PERMITTING.
6. CONTRACTOR SHALL NOTIFY THE CIVIL ENGINEERING BRANCH, DEPARTMENT OF PLANNING AND PERMITTING AT 768-8084, THREE (3) DAYS IN ADVANCE OF FINAL INSPECTION.
7. CONTRACTOR SHALL MEET WITH THE INSPECTOR FROM THE CIVIL ENGINEERING BRANCH, DEPARTMENT OF PLANNING AND PERMITTING DURING THE FINAL INSPECTION.
8. WITHIN TEN (10) DAYS FOLLOWING NOTIFICATION OF AWARD OF CONTRACT, THE CONTRACTOR SHALL SUBMIT TO THE DEPARTMENT OF PLANNING AND PERMITTING (PHONE: 768-8084) FOR APPROVAL, A LIST OF ANY SIGNING AND PAVEMENT MARKING MATERIAL WHICH HE PROPOSES TO INSTALL. THE LIST SHALL BE COMPLETE AS TO THE NAME OF MANUFACTURER, CATALOG NUMBER, AND SHALL BE SUPPLEMENTED WITH MATERIAL BROCHURES.
9. UPON FINAL INSPECTION OF THE PROJECT, THE CONTRACTOR SHALL SUBMIT A LETTER OF CERTIFICATION FOR ALL TRAFFIC SIGNING AND PAVEMENT MARKING MATERIALS INSTALLED.
10. SIGNS SHALL BE ATTACHED TO BRACKETS WITH 5/16" ZINC PLATED STEEL BOLTS, NUTS AND WASHERS. SIGNS 48" WIDE OR LARGER THAN 10 SQ. FT. IN AREA SHALL BE MOUNTED ON TWO 2" GALV. PIPE POST. THE SIGN SHALL BE INSTALLED WITH AT LEAST ONE (1) FOOT CLEARANCE FROM THE SIGN EDGE TO THE CURB FACE.
11. ALL TRAFFIC SIGNS SHALL BE REFLECTORIZED.
12. RAISED PAVEMENT MARKERS SHALL BE INSTALLED IN ACCORDANCE WITH THE DEPARTMENT OF PLANNING AND PERMITTING STANDARDS.
13. LOCATION OF "STOP" SIGN:
    - A. INSTALL "STOP" SIGN AT CURB TANGENT POINT.
    - B. INSTALL "STOP" SIGN ON METAL STREET LIGHT STANDARD IF A STANDARD IS LOCATED WITHIN 10 FEET OF CURB RETURN.
    - C. INSTALL "STOP" SIGN IN FRONT OF UTILITY POLE IF A POLE IS LOCATED WITHIN 10 FEET OF CURB RETURN.
14. PAVEMENT WORD AND SYMBOL MARKINGS SHALL BE IN ACCORDANCE WITH THE DEPARTMENT OF PLANNING AND PERMITTING STANDARDS.
15. THE CONTRACTOR SHALL USE THERMOPLASTIC MATERIAL, APPROVED BY THE CIVIL ENGINEERING BRANCH, DEPARTMENT OF PLANNING AND PERMITTING, FOR ALL CROSSWALKS, STOP BARS, PAVEMENT ARROWS, CENTER LINES, LANE LINES, ARC LINES, CHANNELIZED TRAFFIC ISLANDS, AND LEGENDS.

ANCHOR POSTS NOTES:

1. KEEP INSIDE OF 2- ¼" ANCHOR POST FREE FROM IMPEDIMENTS THAT MAY PREVENT PROPER SEATING OF 2" SIGN POST.
2. SQUARE TUBING SIGN POST SHALL BE TELESCOPING TYPE WITH 7/16" DIA. HOLES AT 1" O.C. ON FOUR SIDES.
3. OCTAGON SIGN POST SHALL BE TELESCOPING TYPE WITH 7/16" DIA. HOLES AT 1" O.C. ON TWO SIDES.
4. USE 5/16" x 2- ¾" BOLTS TO SECURE THE OCTAGONAL AND SQUARE TUBING POST ONTO THE 2- ¼" SQUARE TUBE ANCHOR POST.
5. MINIMUM BURY DEPTH FOR THE 2- ¼" ANCHOR POST SHALL BE AS FOLLOWS:
   4'-0" MIN. AT POOR SOIL CONDITIONS
   2'-6" MIN. AT ROCKY CONDITIONS

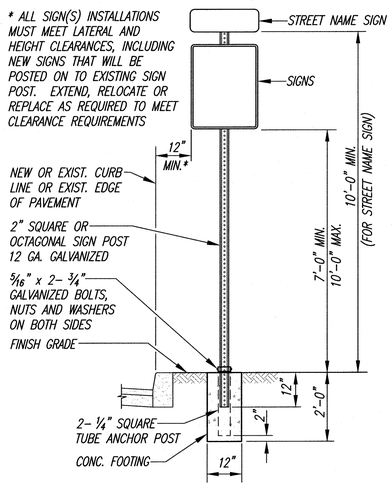

INSTALLATION OF NEW OR RELOCATED SIGN POST W/ CONCRETE FOOTING

NOT TO SCALE

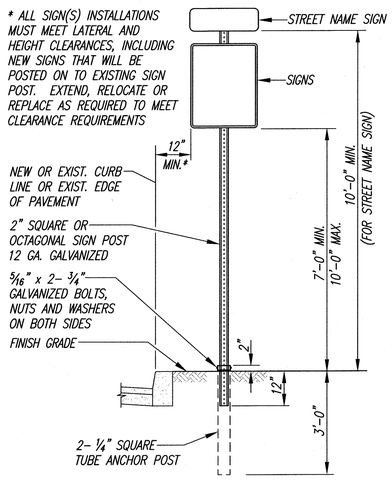

INSTALLATION OF NEW OR RELOCATED SIGN POST W/ ANCHOR POST, WITHOUT CONCRETE FOOTING

NOT TO SCALE

NOTES:

1. SIGNS SHALL BE ATTACHED TO POSTS WITH 5/16" ZINC PLATED STEEL BOLTS, NUTS AND WASHERS.
2. SIGNS 48" WIDE OR LARGER THAN 10 SQ. FEET IN AREA SHALL BE MOUNTED ON 2 - 2" ø GALV. POSTS. THE SIGN SHALL BE INSTALLED WITH AT LEAST 1 FT. CLEARANCE FROM THE SIGN EDGE TO THE CURB FACE.

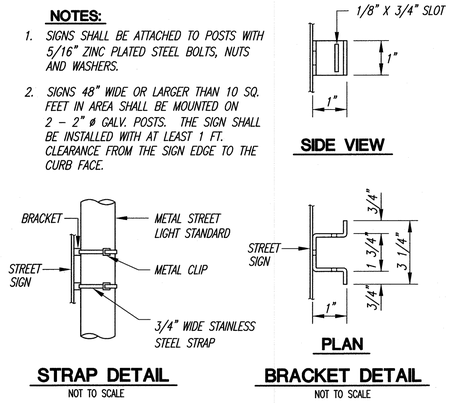

STRAP DETAIL

NOT TO SCALE

BRACKET DETAIL

NOT TO SCALE



THIS WORK WAS PREPARED BY ME OR UNDER MY SUPERVISION. CONSTRUCTION OF THIS PROJECT WILL BE UNDER MY OBSERVATION. LICENSE EXPIRATION DATE: 04/30/14

REVISION DATE	DESCRIPTION	MADE BY	APPROVED

cp&e
Community Planning and Engineering, Inc.
Engineering Design | Construction Management | Infrastructure Planning
1286 Queen Emma Street Honolulu, Hawaii

EAST KAPOLEI II DEVELOPMENT INCREMENT 2B

HONOULULI, EWA, OAHU, HAWAII
(DPP SUBD. FILE NO. 2011/SUB-155)
OWNER & DEVELOPER: DEPARTMENT OF HAWAIIAN HOME LANDS
TAX MAP KEY: 9-1-17: Portion 110

TRAFFIC SIGNS AND PAVEMENT MARKING DETAILS

DRAWN BY: LYLT	ENGINEER: SS	CHECKED BY: AMM

APPROVED:

CHIEF, TRAFFIC REVIEW BRANCH, D.P.P. DATE

DWG. NO. C-31 SHEET 32 OF 78 SHEETS

FILE	POCKET	FOLDER	NO.

P:\Land Projects\DHHL East Kapolei II\Increment I-B\Construction Drawings\Government Review #3\TRAFFIC SIGNS AND PAVEMENT MARKING DETAILS GR#3.dwg, 32 TRAFFIC SIGNS AND PAVEMENT MARKING DETAILS, 3/14/2013 3:00:29 PM, 1:1

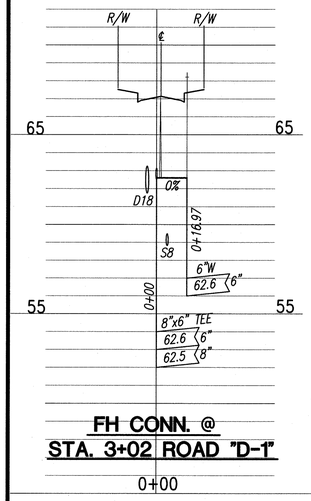

FH CONN. @ STA. 3+02 ROAD "D-1"

0+00

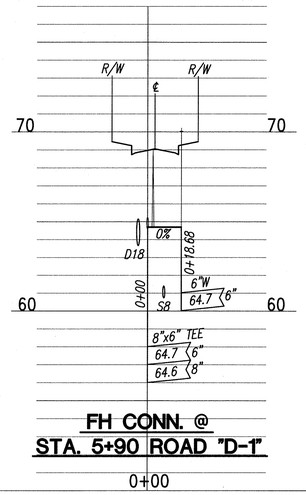

FH CONN. @ STA. 5+90 ROAD "D-1"

0+00

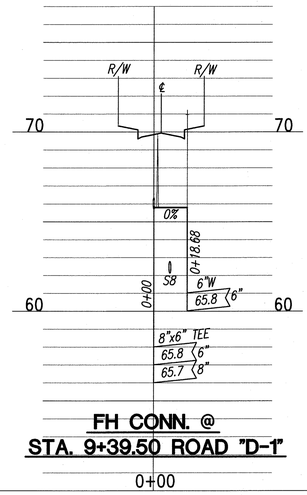

FH CONN. @ STA. 9+39.50 ROAD "D-1"

0+00

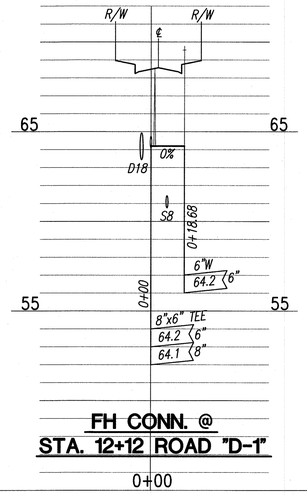

FH CONN. @ STA. 12+12 ROAD "D-1"

0+00

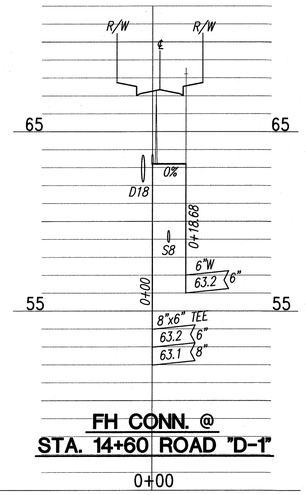

FH CONN. @ STA. 14+60 ROAD "D-1"

0+00

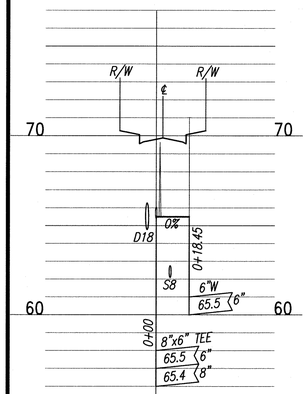

FH CONN. @ STA. 2+20 ROAD "D-2"

0+00

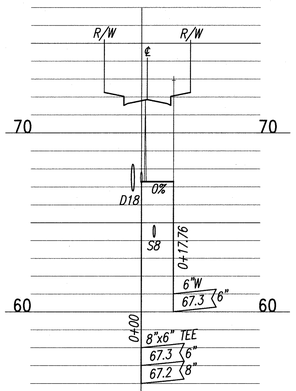

FH CONN. @ STA. 4+19 ROAD "D-2"

0+00

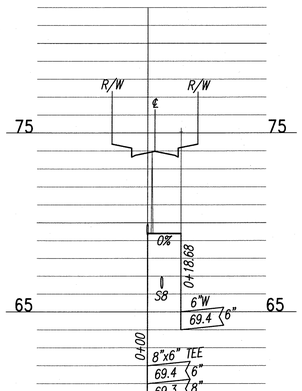

FH CONN. @ STA. 6+32 ROAD "D-2"

0+00

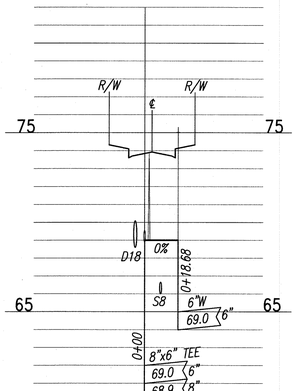

FH CONN. @ STA. 9+69 ROAD "D-2"

0+00

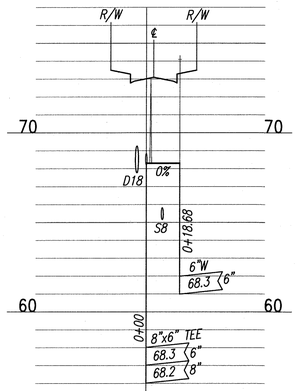

FH CONN. @ STA. 11+36 ROAD "D-2"

0+00

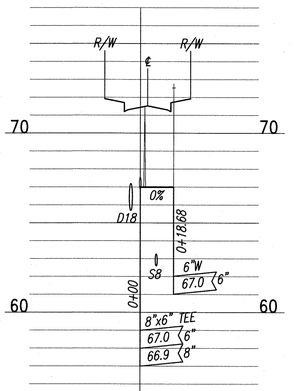

FH CONN. @ STA. 14+50 ROAD "D-2"

0+00

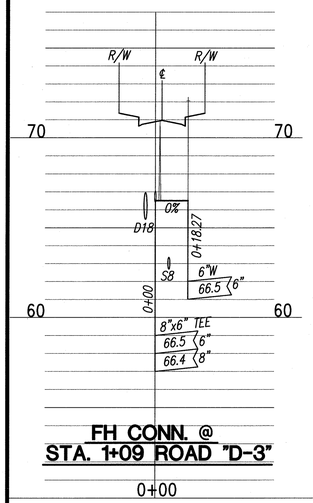

FH CONN. @ STA. 1+09 ROAD "D-3"

0+00

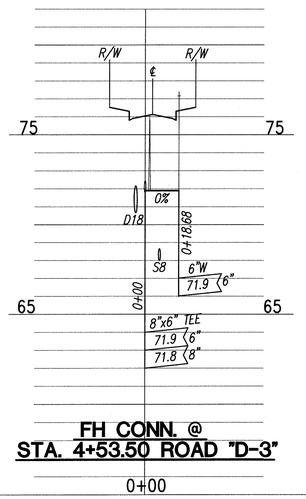

FH CONN. @ STA. 4+53.50 ROAD "D-3"

0+00

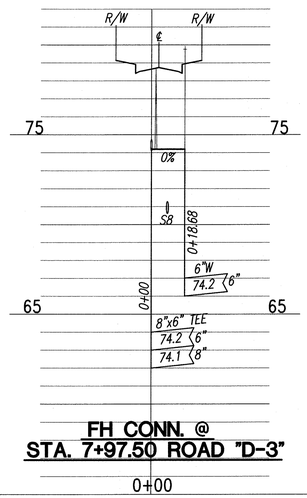

FH CONN. @ STA. 7+97.50 ROAD "D-3"

0+00

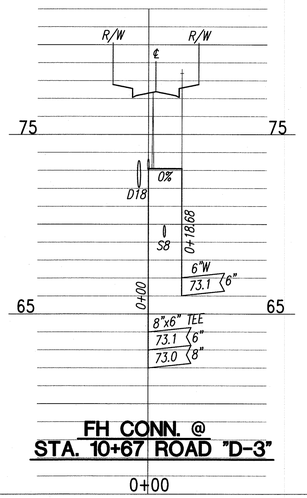

FH CONN. @ STA. 10+67 ROAD "D-3"

0+00

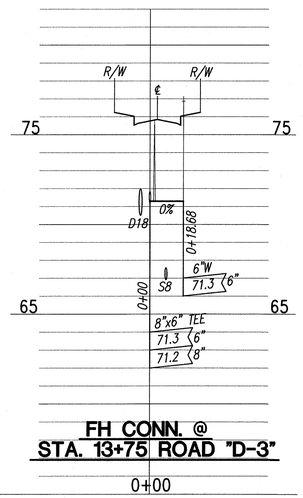

FH CONN. @ STA. 13+75 ROAD "D-3"

0+00

FH PROFILES

SCALES: HORIZ. 1"=40'
VERT. 1"= 4'

40 20 0 40 80
Horizontal
4 3 2 1 0 4 8
Vertical
Graphic Scale in Feet

AMSON M. MURAYAMA
LICENSED PROFESSIONAL ENGINEER
No. 6975-C
HAWAII, U.S.A.

THIS WORK WAS PREPARED BY ME OR UNDER MY SUPERVISION. CONSTRUCTION OF THIS PROJECT WILL BE UNDER MY OBSERVATION. LICENSE EXPIRATION DATE: 04/30/14

REVISION DATE	DESCRIPTION	MADE BY	APPROVED

cp&e Community Planning and Engineering, Inc.
Engineering Design | Construction Management | Infrastructure Planning
1286 Queen Emma Street Honolulu, Hawaii

EAST KAPOLEI II DEVELOPMENT INCREMENT 2B

HONOULULI, EWA, OAHU, HAWAII
(DPP SUBD. FILE NO. 2011/SUB-155)
OWNER & DEVELOPER: DEPARTMENT OF HAWAIIAN HOME LANDS
TAX MAP KEY: 9-1-17: Portion 110

FIRE HYDRANT PROFILES

DRAWN BY: LYLT	ENGINEER: SS	CHECKED BY: AMM

APPROVED:

9-20-13
MANAGER AND CHIEF ENGINEER, BWS. DATE
CITY & COUNTY OF HONOLULU
(FOR WORK AFFECTING BWS FACILITIES IN CITY/STATE RIGHT-OF-WAY AND BWS EASEMENTS ONLY)

DWG. NO. C-32 SHEET 33 OF 78 SHEETS

FILE	POCKET	FOLDER	NO.

P:\Land Projects\DHHL East Kapolei II\Increment II-B\Construction Drawings\Government Review #3\FIRE HYDRANT PROFILES GR#3.dwg, 33 FIRE HYDRANT PROFILES, 3/13/2013 3:18:50 PM, 1:1

DRAINAGE STRUCTURE NOTES

1. ALL WORK SHALL CONFORM TO THE 'STANDARD SPECIFICATIONS FOR PUBLIC WORKS CONSTRUCTION' (LATEST).

2. CONCRETE SHALL HAVE A MINIMUM 28 DAY COMPRESSIVE STRENGTH & A MAXIMUM WATER TO CEMENT RATIO AS FOLLOWS:

	STRENGTH	W/C RATIO
DMH & CB	4,000 PSI	0.48

3. ALL REINFORCING STEEL SHALL CONFORM TO ASTM A615 GRADE 60.

4. MINIMUM COVER IN INCHES FOR REBARS FOR CAST-IN-PLACE AND PRECAST CONCRETE EXCEPT AS NOTED:

CONCRETE CAST AGAINST EARTH (C.I.P.)	3"
FORMED CONCRETE EXPOSED TO EARTH OR WEATHER	2"

5. UNLESS OTHERWISE NOTED, SPLICES, LAPS, DOWEL EXTENSIONS AND EMBEDMENTS SHALL BE 40 BAR DIAMETERS MINIMUM.

6. ALL REINFORCING BARS MARKED 'CONT.' OR 'TEMP.' SHALL BE LAPPED 40 BAR DIAMETERS MINIMUM.

7. STAGGER ALL SPLICES WHERE POSSIBLE.

8. REBARS SHALL BE SUPPORTED, BENT AND PLACED AS PER 'MANUAL OF STANDARD PRACTICE FOR DETAILING CONCRETE STRUCTURES' ACI 315 (LATEST).

9. AT TIME CONCRETE IS PLACED, REINFORCING SHALL BE FREE FROM MUD, OIL, LAITANCE OR OTHER SUBSTANCES ADVERSELY AFFECTING BOND CAPACITY.

10. FOR REINFORCING NOT SHOWN ON THE PLANS, FOLLOW LATEST APPROVED VERSION OF THE 'STANDARD DETAILS FOR PUBLIC WORK CONSTRUCTION' (STANDARD DETAILS).

11. REINFORCEMENT, ANCHOR BOLTS, DOWELS AND ALL OTHER EMBEDDED ITEMS SHALL BE POSITIVELY SECURED BEFORE POURING.

DESIGN CRITERIA

1. AASHTO LRFD BRIDGE DESIGN SPECIFICATIONS BRIDGES FOURTH EDITION 2007:

LIVE LOAD: HL-93 (IN TRAFFIC AREAS)
250 PSF (NON-TRAFFIC AREAS)

60 PCF ACTIVE PRESSURE (TOP RESTRAINED)

PRECAST CONSTRUCTION NOTES

1. PRIOR TO CONSTRUCTION AND INSTALLATION OF ANY PRECAST STRUCTURE, THE CONTRACTOR SHALL NOTIFY THE CIVIL ENGINEERING BRANCH, DEPARTMENT OF PLANNING AND PERMITTING AT 768-8084 TO ARRANGE FOR INSPECTIONAL SERVICES. NON-COMPLIANCE OF THIS REQUIREMENT SHALL MEAN IMMEDIATE SUSPENSION OF ALL PRECAST WORK AND REJECTION OF ALL PRECAST STRUCTURES ALREADY CONSTRUCTED.

2. CONSTRUCTION OF PRECAST DRAINAGE STRUCTURES SHALL CONFORM TO ASTM C478.

3. THE JOINTS SHALL BE CONSTRUCTED TRUE TO THE DIMENSIONS SHOWN ON THE SHOP DRAWINGS.

4. THE CONTRACTOR SHALL BE RESPONSIBLE FOR VERIFYING ALL DIMENSIONS FOR CONFORMANCE TO THE PLANS AND SPECIFICATIONS, CORRECT DETAILS AND FIT OF PARTS AFTER ASSEMBLY.

5. IF THE PERMISSIBLE VARIATION/TOLERANCES ARE EXCEEDED, THE PRECAST SECTIONS MAY BE ACCEPTABLE UPON RECEIPT OF A SIGNED AND STAMPED CERTIFICATION FROM THE DESIGN ENGINEER THAT:
A. EXCEEDING THE TOLERANCE/VARIATION DOES NOT AFFECT THE STRUCTURAL INTEGRITY OF THE UNIT,
B. THE UNIT CAN BE BROUGHT WITHIN TOLERANCE BY STRUCTURALLY SATISFACTORY MEANS, OR
C. THE TOTAL ERECTED ASSEMBLY CAN BE MODIFIED TO MEET ALL STRUCTURAL REQUIREMENTS.

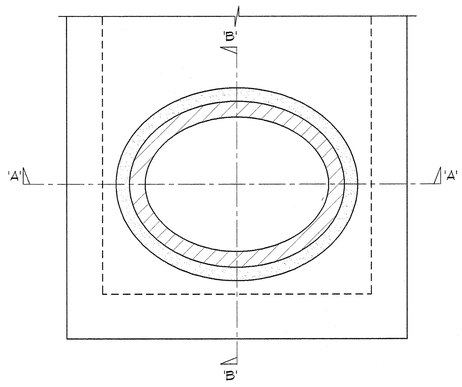

WALL ELEVATION

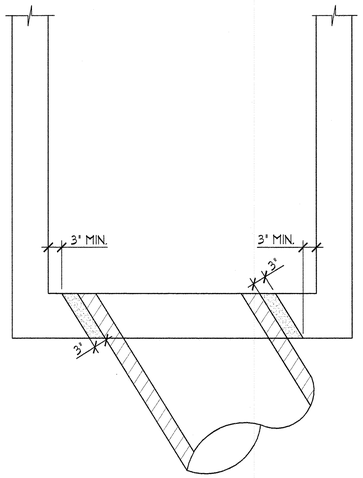

SECTION 'A-A'

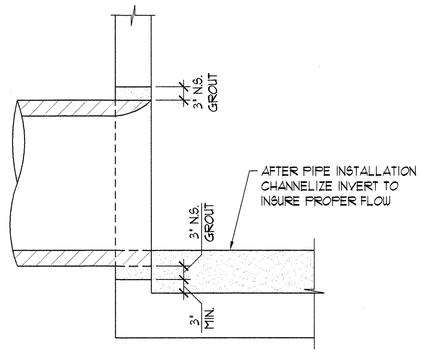

SECTION 'B-B'

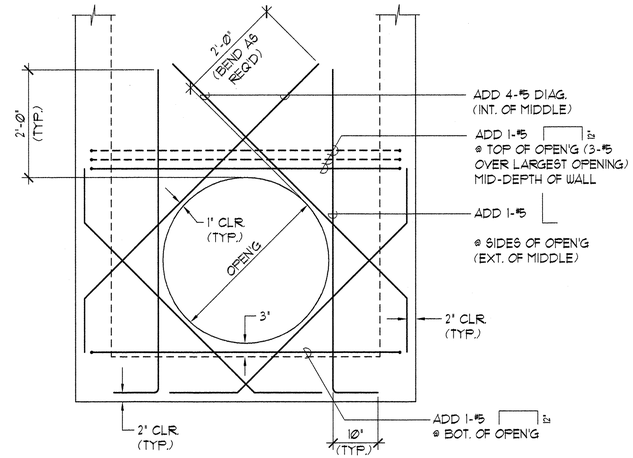

ELEVATION

PIPE OPEN'G LIMITATIONS FOR PRECAST BOXES

N.T.S.

A S-1

TYPICAL ADDED REINF. AROUND PIPE OPEN'G FOR P.C.B.

N.T.S.

B S-1

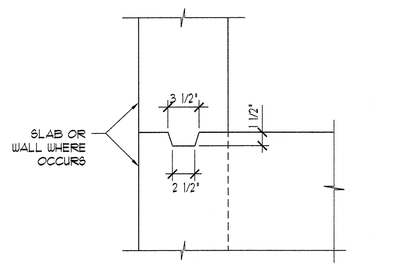

TYPICAL KEY DETAIL

SC: 1 1/2"=1'-0"

C S-1

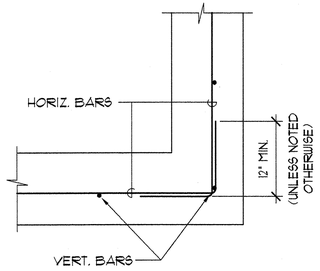

PLAN - TYP. CORNER REINFORCEMENT LAPPING

N.T.S.

D S-1

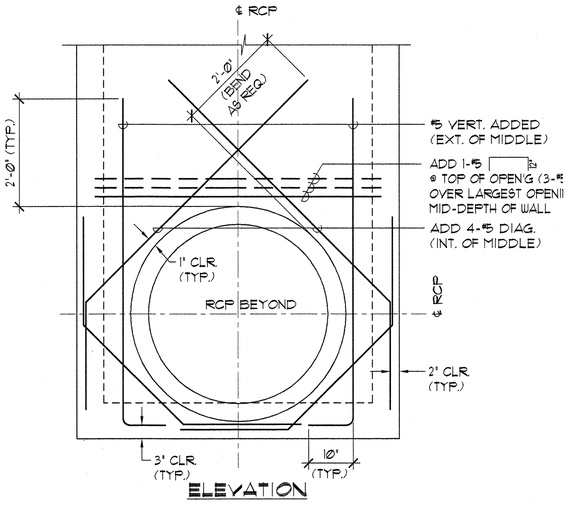

ELEVATION

TYP. ADDED REINF. AT PIPES FOR C.I.P. CONSTR.

N.T.S.

E S-1

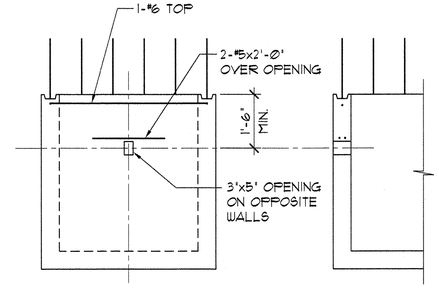

TYPICAL LIFTING EYE DETAIL FOR PRECAST BOX

N.T.S.

F S-1

REVISION DATE	DESCRIPTION	MADE BY	APPROVED

cp&e Community Planning and Engineering, Inc.
Engineering Design Construction Management Infrastructure Planning
1100 Alakea Street, Sixth Floor Honolulu, Hawaii

EAST KAPOLEI II DEVELOPMENT INCREMENT 2B

HONOULIULI, EWA, OAHU, HAWAII
(DPP SUBD. FILE NO. 2011/SUB-155)
OWNER & DEVELOPER: DEPARTMENT OF HAWAIIAN HOME LANDS
TAX MAP KEY: 9-1-17: PORTION 110

GENERAL NOTES & TYPICAL DETAILS

DRAWN BY: HM	ENGINEER: TT	CHECKED BY: TT

APPROVED:

M. Tsuji 6/28/13
CHIEF, CIVIL ENGINEERING BRANCH, D.P.P. DATE

THOMAS Y. TANIMURA
LICENSED PROFESSIONAL ENGINEER
No. 4926-S
HAWAII, U.S.A.

TY Tanimura
04/30/14
Expiration Date of the License

THIS WORK WAS PREPARED BY ME OR UNDER MY SUPERVISION AND CONSTRUCTION OF THIS PROJECT WILL BE UNDER MY OBSERVATION.

DWG. NO. **S-1**

SHEET 34 OF 78 SHEETS

FILE	POCKET	FOLDER	NO.

SLAB REINFORCING SCHEDULE

MARK	"A"	"B"	tw	TOP SLAB REINF. THK.	TOP SLAB REINF. TOP MAIN	TOP SLAB REINF. REINF. DISTRIB.
A-2	4'-Ø"	6'-6"	8"	10"	#5@6"o.c.	#5@10"o.c.
B-1	4'-Ø"	7'-Ø"	8"	10"	#5@6"o.c.	#5@10"o.c.

NOTE:
THE WALLS AND INVERT SLAB FOR DMH A-2 & B-1 WERE CONSTRUCTED UNDER:
EAST KAPOLEI II DEVELOPMENT ROAD 'E'
CP # 2010-CP-193

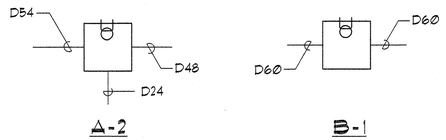

A-2

B-1

SCHEMATIC PLAN

N.T.S.

B
S-2

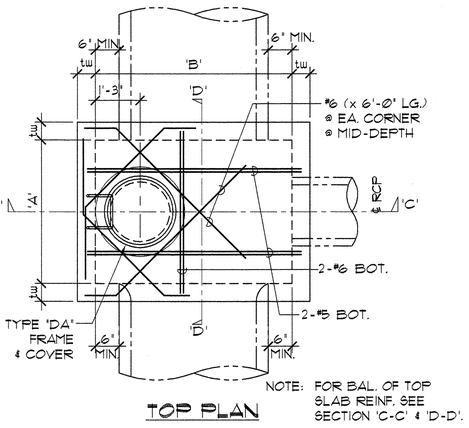

NOTE: FOR BAL. OF TOP SLAB REINF. SEE SECTION 'C-C' & 'D-D'.

TOP PLAN

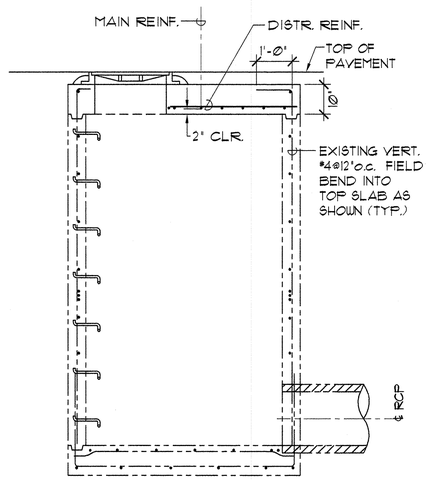

SECTION 'C-C'

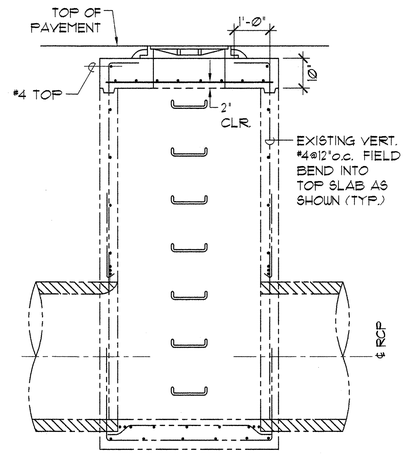

SECTION 'D-D'

CAST-IN-PLACE TOP SLAB UNFINISHED SDMH

SC: 1/2"=1'-Ø"

A
S-2

REVISION DATE	DESCRIPTION	MADE BY	APPROVED

cp&e Community Planning and Engineering, Inc.
Engineering Design Construction Management Infrastructure Planning
1100 Alakea Street, Sixth Floor Honolulu, Hawaii

EAST KAPOLEI II DEVELOPMENT INCREMENT 2B

HONOULIULI, EWA, OAHU, HAWAII
(DPP SUBD. FILE NO. 2011/SUB-155)
OWNER & DEVELOPER: DEPARTMENT OF HAWAIIAN HOME LANDS
TAX MAP KEY: 9-1-17: PORTION 110

NEW TOP SLAB OVER UNFINISHED SDMH

DRAWN BY: HM	ENGINEER: TT	CHECKED BY: TT

APPROVED:

M. Fog 6/28/13
CHIEF, CIVIL ENGINEERING BRANCH, D.P.P. DATE

THOMAS Y. TANIMURA
LICENSED PROFESSIONAL ENGINEER
No. 4926-S
HAWAII, U.S.A.

Ty Tanimura
04/30/14
Expiration Date of the License

THIS WORK WAS PREPARED BY ME OR UNDER MY SUPERVISION AND CONSTRUCTION OF THIS PROJECT WILL BE UNDER MY OBSERVATION.

DWG. NO. S-2 SHEET 35 OF 78 SHEETS

FILE	POCKET	FOLDER	NO.

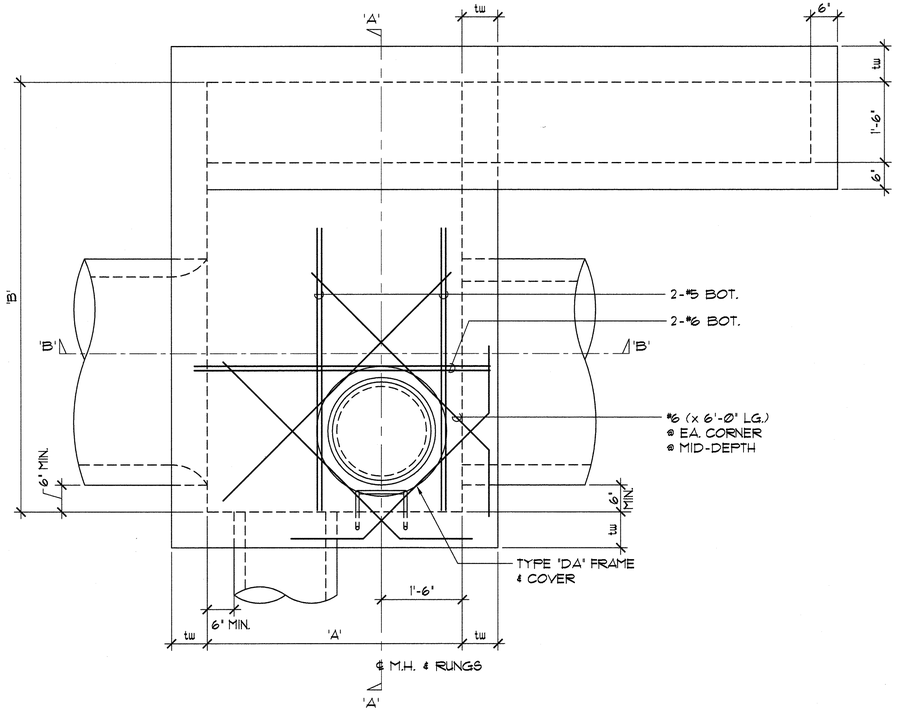

TOP PLAN (MH ON FRONT FACE)

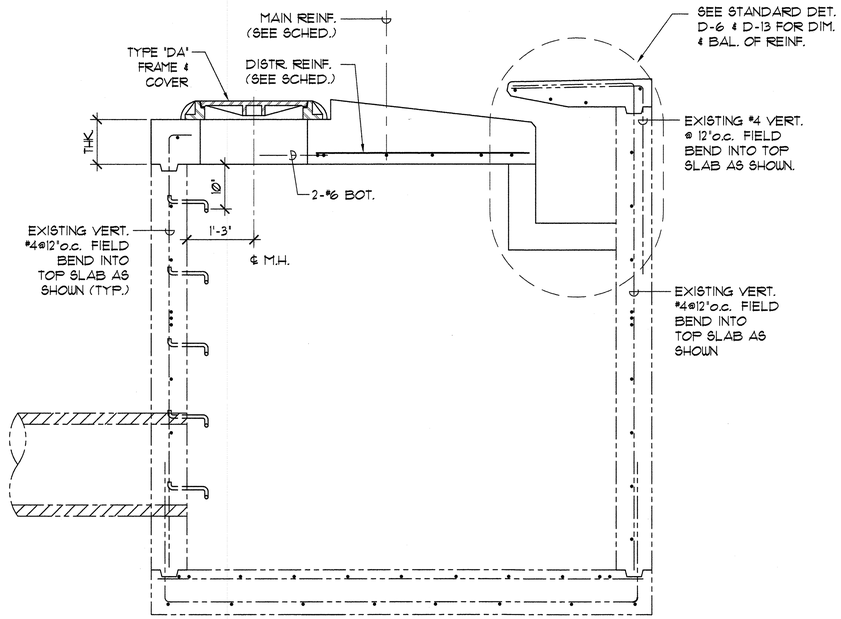

SECTION 'A-A'

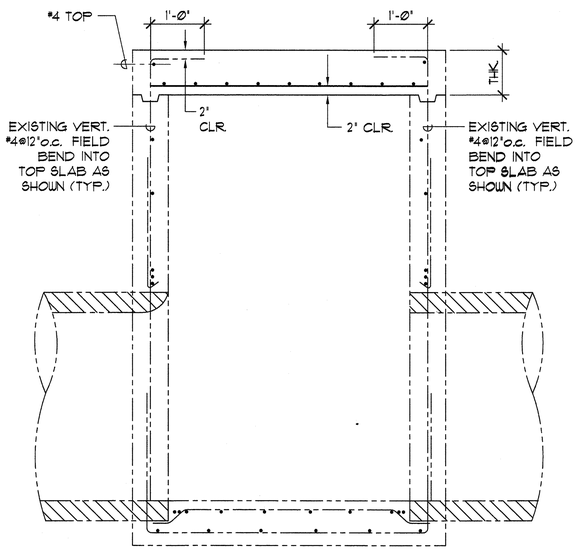

SECTION 'B-B'

SPECIAL TYPE 'B' CATCH BASIN CAST-IN-PLACE DETAILS

SC: 3/4" = 1'-Ø"

S-3

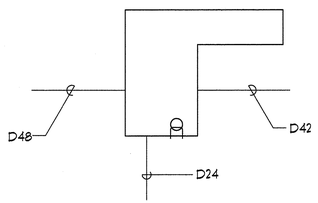

A-3

SCHEMATIC PLAN

N.T.S.

B
S-3

SLAB REINFORCING SCHEDULE						
					TOP SLAB REINF.	
MARK	"A"	"B"	tw	THK.	TOP MAIN	REINF. DISTRIB.
A-3	5'-4"	7'-4"	8"	10"	#6@6'o.c.	#5@10'o.c.

NOTE:
THE WALLS AND INVERT SLAB FOR CB A-3
WERE CONSTRUCTED UNDER:
EAST KAPOLEI II DEVELOPMENT ROAD 'E'
CP # 2010-CP-193

THOMAS Y. TANIMURA
LICENSED PROFESSIONAL ENGINEER
No. 4926-S
HAWAII, U.S.A.

04/30/14
Expiration Date of the License

THIS WORK WAS PREPARED BY ME OR UNDER MY SUPERVISION AND CONSTRUCTION OF THIS PROJECT WILL BE UNDER MY OBSERVATION.

REVISION DATE	DESCRIPTION	MADE BY	APPROVED

cp&e Community Planning and Engineering, Inc.
Engineering Design Construction Management Infrastructure Planning
1100 Alakea Street, Sixth Floor Honolulu, Hawaii

EAST KAPOLEI II DEVELOPMENT INCREMENT 2B

HONOULIULI, EWA, OAHU, HAWAII
(DPP SUBD. FILE NO. 2011/SUB-155)
OWNER & DEVELOPER: DEPARTMENT OF HAWAIIAN HOME LANDS
TAX MAP KEY: 9-1-17: PORTION 110

NEW TOP SLAB & GUTTER FOR UNFINISHED CATCH BASIN

DRAWN BY: HM	ENGINEER: TT	CHECKED BY: TT

APPROVED:

6/28/13
CHIEF, CIVIL ENGINEERING BRANCH, D.P.P. DATE

DWG. NO. **S-3**

SHEET 36 OF 78 SHEETS

FILE	POCKET	FOLDER	NO.

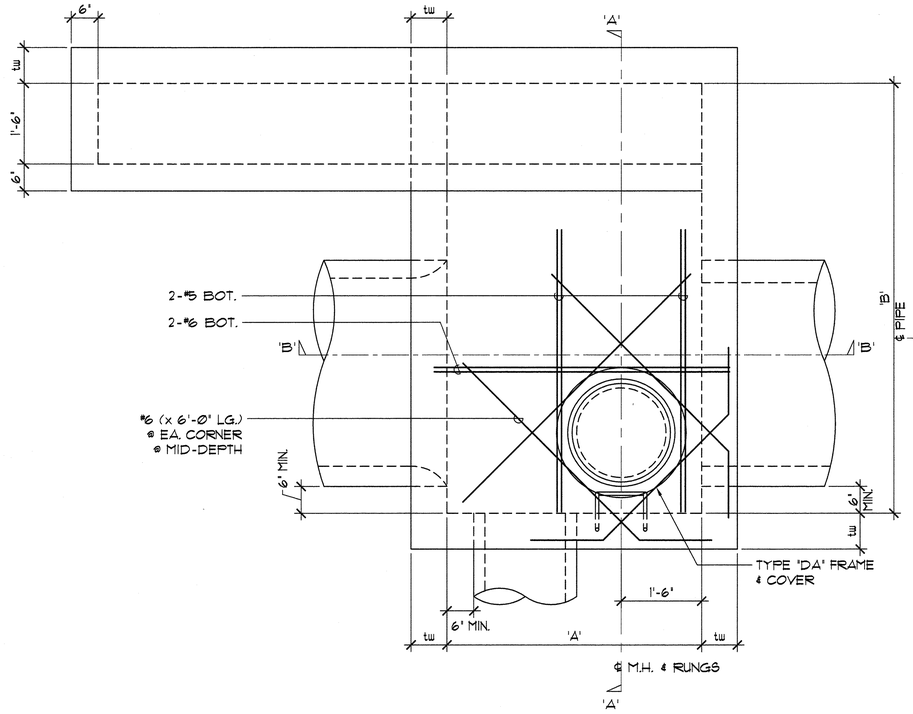

TOP PLAN (MH ON FRONT FACE)

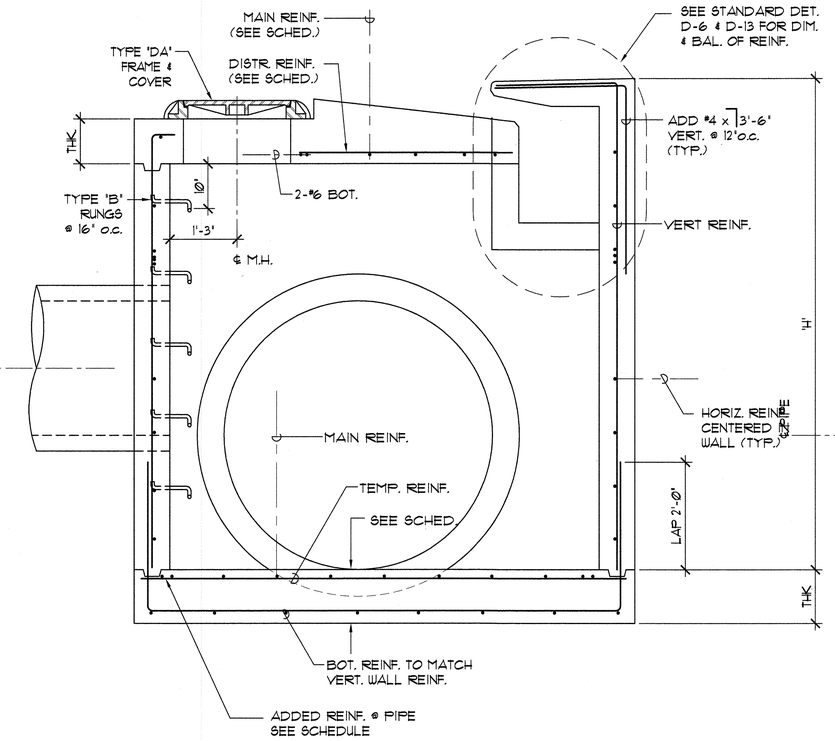

SECTION 'A-A'

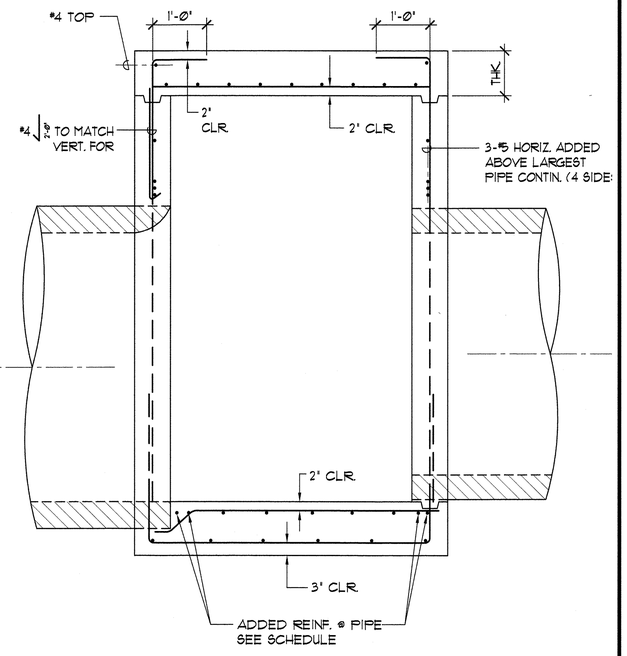

SECTION 'B-B'

SPECIAL TYPE 'B' CATCH BASIN CAST-IN-PLACE DETAILS

SC: 3/4" = 1'-Ø"

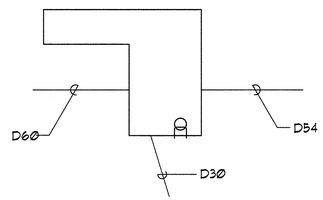

CB A-1

SCHEMATIC PLAN

N.T.S.

B
S-4

SLAB REINFORCING SCHEDULE — TYPE 'B' CB

					TOP SLAB REINF.			INVERT SLAB REINF.		
MARK	"H" MAX.	"A"	"B"	tw	THK.	TOP MAIN	REINF. DISTRIB.	THK.	MAIN	TEMP.
A-1	9.2'	6'-2"	8'-Ø"	8"	10"	#6@6" o.c.	#5@8" o.c.	12	#4@3" o.c.	#4@3" o.c.

WALL REINFORCING SCHEDULE

MARK	A-1				MARK
tw	8"				tw
VERT. REINF.	#4@12" o.c.				VERT. REINF.
"H"	HORIZ. REINF. (CENTERED IN WALL)				"H"
Ø'-Ø" TO 2'-Ø"	#5@7" o.c.				Ø'-Ø" TO 2'-Ø"
2'-Ø" TO 3'-Ø"					2'-Ø" TO 3'-Ø"
3'-Ø" TO 4'-Ø"	#5@5" o.c.				3'-Ø" TO 4'-Ø"
4'-Ø" TO 5'-Ø"					4'-Ø" TO 5'-Ø"
5'-Ø" TO 6'-Ø"					5'-Ø" TO 6'-Ø"
6'-Ø" TO 7'-Ø"					6'-Ø" TO 7'-Ø"
7'-Ø" TO 8'-Ø"					7'-Ø" TO 8'-Ø"
8'-Ø" TO 9'-Ø"					8'-Ø" TO 9'-Ø"
>9'-Ø"					>9'-Ø"

ADDED REINF. @ PIPE

PIPE SIZE	REINF.
30"ϕ	1-#5
54"ϕ	2-#5
60"ϕ	2-#5

THOMAS Y. TANIMURA LICENSED PROFESSIONAL ENGINEER No. 4926-S HAWAII, U.S.A.

04/30/14
Expiration Date of the license

THIS WORK WAS PREPARED BY ME OR UNDER MY SUPERVISION AND CONSTRUCTION OF THIS PROJECT WILL BE UNDER MY OBSERVATION.

REVISION DATE	DESCRIPTION	MADE BY	APPROVED

cp&e Community Planning and Engineering, Inc.
Engineering Design Construction Management Infrastructure Planning
1100 Alakea Street, Sixth Floor Honolulu, Hawaii

EAST KAPOLEI II DEVELOPMENT INCREMENT 2B

HONOULIULI, EWA, OAHU, HAWAII
(DPP SUBD. FILE NO. 2011/SUB-155)
OWNER & DEVELOPER: DEPARTMENT OF HAWAIIAN HOME LANDS
TAX MAP KEY: 9-1-17: PORTION 110

SPECIAL TYPE 'B' CATCH BASIN CAST-IN-PLACE DETAILS

DRAWN BY: HM	ENGINEER: TT	CHECKED BY: TT

APPROVED:

M. Tagawa 6/28/13
CHIEF, CIVIL ENGINEERING BRANCH, D.P.P. DATE

A
S-4

DWG. NO. **S-4**

SHEET 37 OF 78 SHEETS

FILE	POCKET	FOLDER	NO.

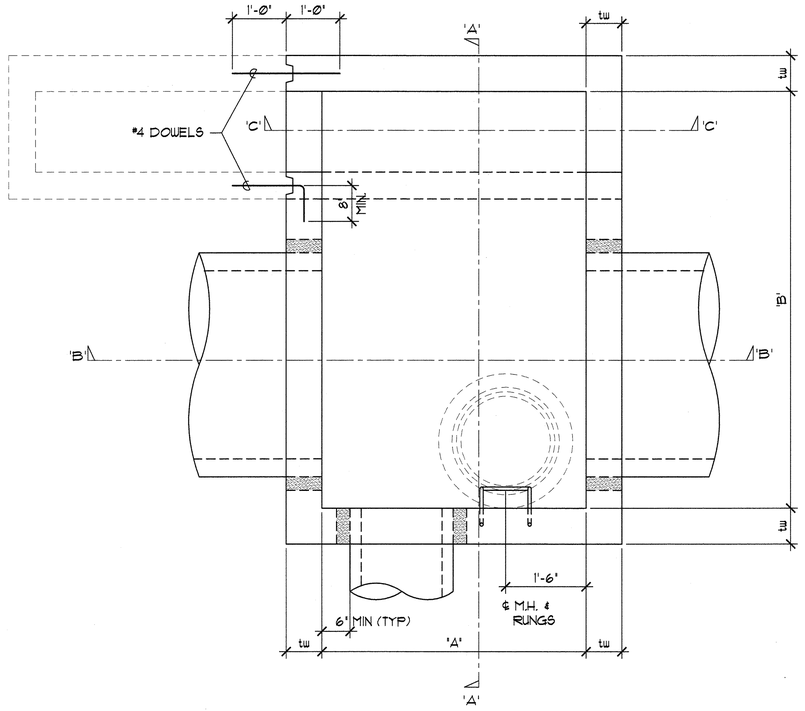

TOP PLAN (MH ON FRONT FACE)

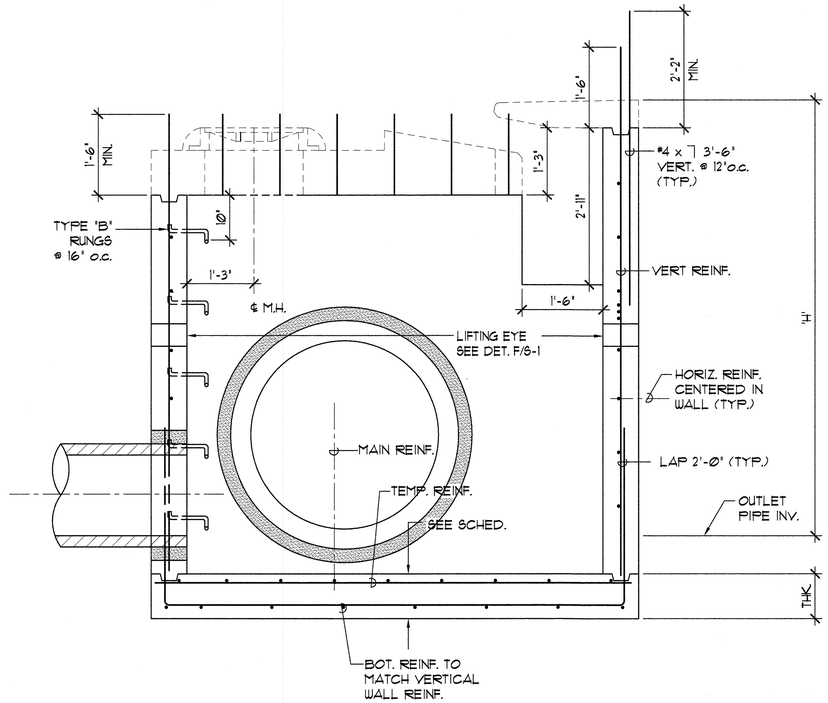

SECTION 'A-A'

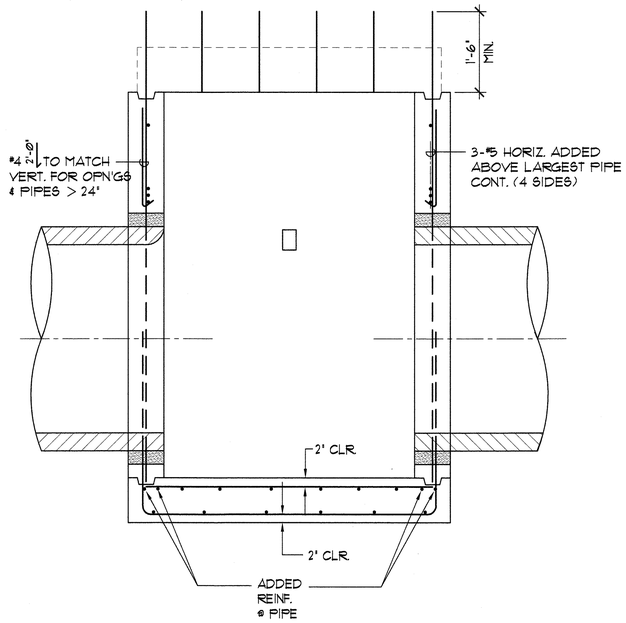

SECTION 'B-B'

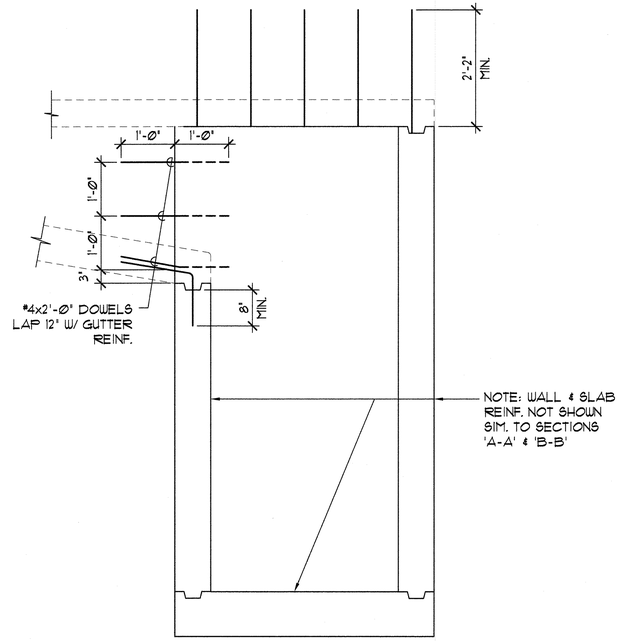

SECTION 'C-C'

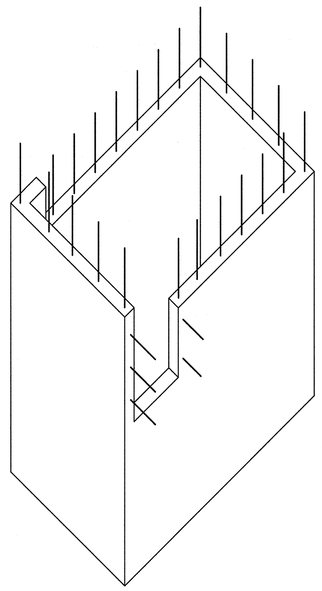

ISOMETRIC
N.T.S.

NOTES:

1) TOP SLAB & GUTTER TO BE CAST-IN-PLACE IN FIELD. FOLLOW REINF. & DETAILS SHOWN ON SHEET S-4.
2) FOR DIMENSIONS & REINF. FOLLOW SCHEDULES SHOWN ON SHEET S-4.
3) SEE SHEET S-1 FOR GENERAL NOTES & TYPICAL DETAILS.

SPECIAL TYPE 'B' PRECAST CATCH BASIN CAST-IN-PLACE DETAILS

SC: 3/4" = 1'-0"

S-5

THOMAS Y. TANIMURA LICENSED PROFESSIONAL ENGINEER No. 4926-S HAWAII, U.S.A.

04/30/14
Expiration Date of the License

THIS WORK WAS PREPARED BY ME OR UNDER MY SUPERVISION AND CONSTRUCTION OF THIS PROJECT WILL BE UNDER MY OBSERVATION.

REVISION DATE	DESCRIPTION	MADE BY	APPROVED

CP&E Community Planning and Engineering, Inc.
Engineering Design Construction Management Infrastructure Planning
1100 Alakea Street, Sixth Floor Honolulu, Hawaii

EAST KAPOLEI II DEVELOPMENT INCREMENT 2B

HONOULIULI, EWA, OAHU, HAWAII
(DPP SUBD. FILE NO. 2011/SUB-155)
OWNER & DEVELOPER: DEPARTMENT OF HAWAIIAN HOME LANDS
TAX MAP KEY: 9-1-17: PORTION 110

SPECIAL TYPE 'B' CATCH BASIN PRECAST DETAILS

DRAWN BY: HM	ENGINEER: TT	CHECKED BY: TT

APPROVED:

6/28/13
CHIEF, CIVIL ENGINEERING BRANCH, D.P.P. DATE

FILE	POCKET	FOLDER	NO.

DWG. NO. **S-5** SHEET 38 OF 78 SHEETS

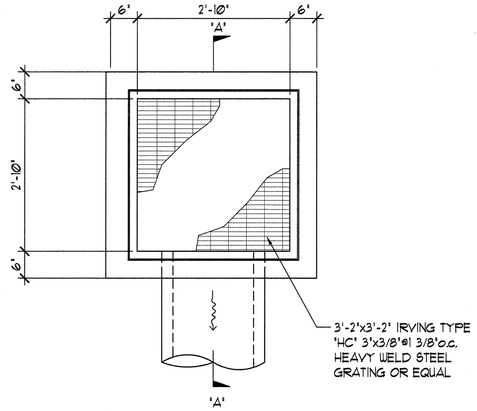

PLAN

SC: 3/4"=1'-Ø"

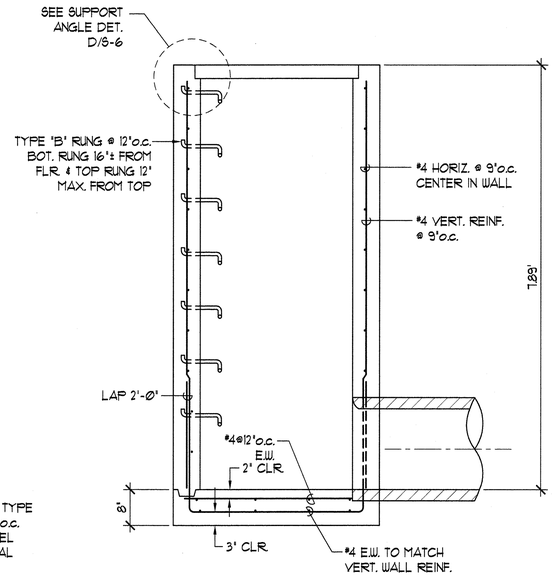

SECTION "A-A" (C.I.P.)

SC: 3/4"=1'-Ø"

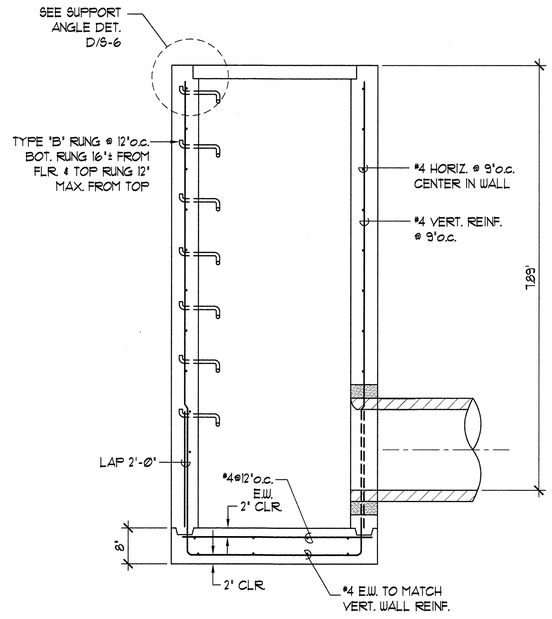

SECTION "A-A" (PRECAST)

SC: 3/4"=1'-Ø"

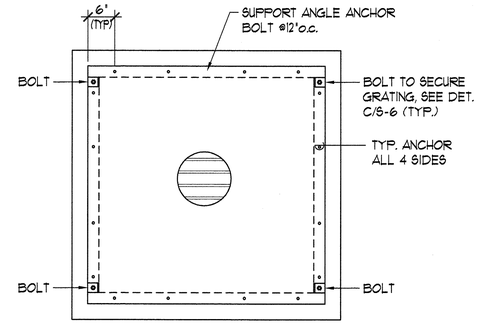

GRATING BOLT DOWN LOCATION PLAN

N.T.S.

B S-6

GRATING NOTES:
1) STEEL GRATING SHALL BE ABLE TO SUPPORT THE WHEEL LOAD PLUS IMPACT FOR THE AASHTO LRFD DESIGN TRUCK (FORMERLY H32Ø TRUCK).
2) GRATING BARS SHALL CONFORM TO ASTM A36 STEEL.
3) CROSS BARS SHALL BE WELDED TO THE MAIN BARS @ 4"o.c. GRATING SHALL BE HOT-DIPPED GALVANIZED AFTER FABRICATION.
4) SUPPORT FRAME SHALL CONSIST OF STEEL PLATES, ANGLES AND THREADED RODS CONFORMING TO ASTM A36 AND ANCHOR BOLTS CONFORMING TO ASTM A3ØT. SUPPORT FRAME SHALL BE HOT-DIPPED GALVANIZED AFTER FRABRICATION.
5) NUTS SHALL CONFORM TO ASTM A563 SIZED TO ACCOMMODATE GALVANIZING.

CAST-IN-PLACE & PRECAST DETAILS FOR DRAIN INLET IN PAVEMENT AREA (PRIVATE)

A S-6

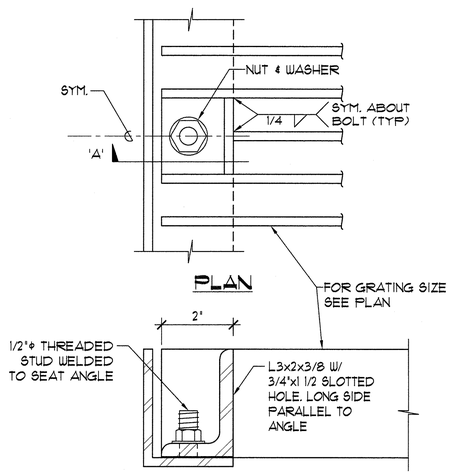

NOTE: PROVIDE 1-BOLT AT EACH CORNER OF EACH SECTION OF GRATING. SEE DET. B/S-6

GRATING BOLT DOWN DETAIL

SC: 6'=1'-Ø"

C S-6

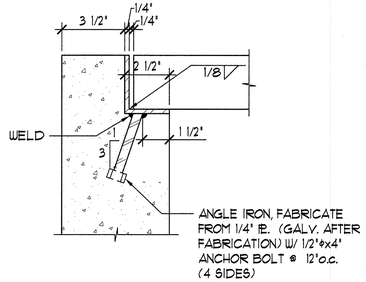

SUPPORT ANGLE

SC: 3" = 1'-Ø"

D S-6

REVISION DATE	DESCRIPTION	MADE BY	APPROVED

Community Planning and Engineering, Inc.
Engineering Design Construction Management Infrastructure Planning
1100 Alakea Street, Sixth Floor Honolulu, Hawaii

EAST KAPOLEI II DEVELOPMENT INCREMENT 2B

HONOULIULI, EWA, OAHU, HAWAII
(DPP SUBD. FILE NO. 2011/SUB-155)
OWNER & DEVELOPER: DEPARTMENT OF HAWAIIAN HOME LANDS
TAX MAP KEY: 9-1-17: PORTION 110

DRAIN INLET DETAILS

DRAWN BY: HM	ENGINEER: TT	CHECKED BY: TT

APPROVED:

M. Tg 6/24/13
CHIEF, CIVIL ENGINEERING BRANCH, D.P.P. DATE

THOMAS Y. TANIMURA LICENSED PROFESSIONAL ENGINEER No. 4926-S HAWAII, U.S.A.

Ty Tanimura
04/30/14
Expiration Date of the License

THIS WORK WAS PREPARED BY ME OR UNDER MY SUPERVISION AND CONSTRUCTION OF THIS PROJECT WILL BE UNDER MY OBSERVATION.

DWG. NO. **S-6** SHEET 39 OF 78 SHEETS

FILE	POCKET	FOLDER	NO.

GENERAL NOTES

1. ALL WORK SHALL CONFORM TO THE BUILDING CODE OF THE CITY AND COUNTY OF HONOLULU (LATEST).

2. ALL MATERIALS AND WORKMANSHIP SHALL CONFORM TO THE DRAWINGS AND THE SPECIFICATIONS.

3. THE GENERAL NOTES AND TYPICAL DETAILS SHALL APPLY UNLESS OTHERWISE SHOWN.

4. DIMENSIONS SHALL TAKE PRECEDENCE OVER SCALES SHOWN ON DRAWINGS.

5. DRAWINGS INDICATE GENERAL AND TYPICAL DETAILS OF CONSTRUCTION. WHERE CONDITIONS ARE NOT SPECIFICALLY INDICATED BUT ARE OF SIMILAR CHARACTER TO DETAILS SHOWN, SIMILAR DETAILS OF CONSTRUCTION SHALL BE USED, SUBJECT TO REVIEW BY THE ARCHITECT.

6. SEE CIVIL DRAWINGS FOR LOCATION OF LIGHT POLES

7. ALL OMISSIONS OR CONFLICTS BETWEEN THE VARIOUS ELEMENTS OF THE WORKING DRAWINGS AND/OR SPECIFICATIONS SHALL BE BROUGHT TO THE ATTENTION OF THE ENGINEER BEFORE PROCEEDING WITH ANY WORK SO INVOLVED.

8. DURING THE CONSTRUCTION PERIOD THE CONTRACTOR SHALL BE RESPONSIBLE FOR THE SAFETY OF THE BUILDING AND THE PROTECTION OF ADJACENT PROPERTIES, STRUCTURES, STREETS AND UTILITIES FROM DAMAGE. THE CONTRACTOR SHALL PROVIDE ADEQUATE SHORING, BRACING AND GUYS IN ACCORDANCE WITH ALL NATIONAL, STATE AND LOCAL SAFETY ORDINANCES.

9. ALL ERECTION PROCEDURES SHALL CONFORM TO OSHA STANDARDS. ANY DEVIATION MUST BE APPROVED BY OSHA PRIOR TO ERECTION.

10. THE CONTRACTOR SHALL TAKE ALL STEPS NECESSARY TO PROPERLY ALIGN THE STRUCTURE.

11. SHOP DRAWINGS REQUIRED BY THE SPECIFICATIONS SHALL BE SUBMITTED TO THE ENGINEER FOR REVIEW PRIOR TO FABRICATION.

12. ALL REQUESTS BY THE CONTRACTOR TO CHANGE WHAT IS SHOWN IN THE CONTRACT DOCUMENTS MUST BE SUBMITTED IN WRITING TO THE ENGINEER.

13. THE CONTRACTOR SHALL NOTIFY TANIMURA & ASSOCIATES (PH. 536-7692) THREE (3) WORKING DAYS PRIOR TO POURING CONCRETE.

FOUNDATION

1. THE FOUNDATION DESIGN IS BASED ON THE RECOMMENDATIONS IN THE FOUNDATION INVESTIGATION REPORT BY PSC CONSULTANTS JOB NO. 27303.10, DATED JUNE 2009. UNLESS OTHERWISE INDICATED FOUNDATION WORK SHALL BE PERFORMED IN ACCORDANCE WITH THIS REPORT. THE REPORT IS PART OF THIS PLAN AND SHALL BE KEPT ON THE JOB SITE AT ALL TIMES.

2. THE SIDES OF THE POLE FOUNDATION SHALL BE UNDISTURBED SOIL.

3. ALL WATER, MUD AND DEBRIS SHALL BE REMOVED FROM THE BOTTOM OF FOOTING EXCAVATIONS PRIOR TO THE PLACEMENT OF CONCRETE.

4. CONTRACTOR SHALL NOTIFY PSC CONSULTANTS, 3 WORKING DAYS PRIOR TO BEGINNING ANY FOUNDATION WORK (BOTTOM OF FOOTING, STRUCTURAL FILL, ETC.).

REINFORCED CONCRETE

1. ALL CONCRETE WORK SHALL CONFORM TO ACI 318-02.

2. ALL CONCRETE SHALL BE NORMAL WEIGHT (150 PCF) WITH AGGREGATES CONFORMING TO ASTM C-33. UNLESS OTHERWISE NOTED, THE COMPRESSIVE STRENGTHS OF CONCRETE AT 28 DAYS AND MAXIMUM AGGREGATE SIZES SHALL BE AS FOLLOWS:

	STRENGTH	AGGREGATE SIZE
DRILLED PIERS	3000 PSI	1-1/2"

3. MAXIMUM WATER-CEMENT RATIO SHALL NOT EXCEED 0.55.

4. ALL REINFORCING STEEL EXCEPT TIES AND STIRRUPS SHALL CONFORM TO ASTM A615 GRADE 60. TIES, STIRRUPS AND REBARS TO BE WELDED SHALL BE ASTM A615 GRADE 40.

5. UNLESS OTHERWISE NOTED, SPLICES, LAPS, DOWEL EXTENSIONS AND EMBEDMENTS SHALL BE 45 BAR DIAMETERS MINIMUM BUT NOT LESS THAN 2'-0".

6. ALL REINFORCING BARS MARKED CONTINUOUS (CONT.) ON THE PLANS SHALL BE LAPPED 45 BAR DIAMETERS MINIMUM BUT NOT LESS THAN 2'-0".

7. STAGGER ALL SPLICES WHERE POSSIBLE.

8. ALL WELDING OF REINFORCING SHALL CONFORM TO "STRUCTURAL WELDING CODE - REINFORCING STEEL" (AWS D1.4).

9. REBARS SHALL BE SUPPORTED, BENT AND PLACED AS PER "MANUAL OF STANDARD PRACTICE FOR DETAILING CONCRETE STRUCTURES" ACI 315 (LATEST).

10. MINIMUM COVER IN INCHES FOR REBARS FOR CAST-IN-PLACE CONCRETE:

CONCRETE CAST AGAINST EARTH	3"
FORMED CONCRETE EXPOSED TO EARTH OR WEATHER:	
#5 AND SMALLER	1-1/2"
#6 AND LARGER	2"

11. AT TIME CONCRETE IS PLACED, REINFORCING SHALL BE FREE FROM MUD, OIL, LAITANCE OR OTHER COATINGS ADVERSELY AFFECTING BOND CAPACITY.

12. REINFORCEMENT, ANCHOR BOLTS, DOWELS AND ALL OTHER EMBEDDED ITEMS SHALL BE POSITIVELY SECURED BEFORE POURING.

DESIGN CRITERIA

1. CODES: 2009 AASHTO STANDARD SPECIFICATIONS FOR STRUCTURAL SUPPORTS FOR HIGHWAY SIGNS, LUMINAIRES AND TRAFFIC SIGNALS

2. FOUNDATION DESIGN CRITERIA
   ALLOWABLE BEARING 2500 PSF
   PASSIVE PRESSURE 250 PCF

3. LATERAL FORCES

WIND
BASIC WIND SPEED (3 SECOND GUST) 105 MPH
WIND IMPORTANCE FACTOR Ir 1.0

SPECIAL INSPECTION

1. ITEMS REQUIRING SPECIAL INSPECTION:
   2. BOLTS IN CONCRETE
   4. REINFORCING STEEL

2. NOTIFY SPECIAL INSPECTOR 3 WORKING DAYS PRIOR TO NEED OF INSPECTION SERVICES.

   CONTRACTOR SHALL NOTIFY TANIMURA & ASSOCIATES (PHONE 536-7692) 3 WORKING DAYS PRIOR TO NEED OF INSPECTION SERVICES. WORK SHALL NOT PROCEED UNTIL INSPECTION HAS BEEN COMPLETED.

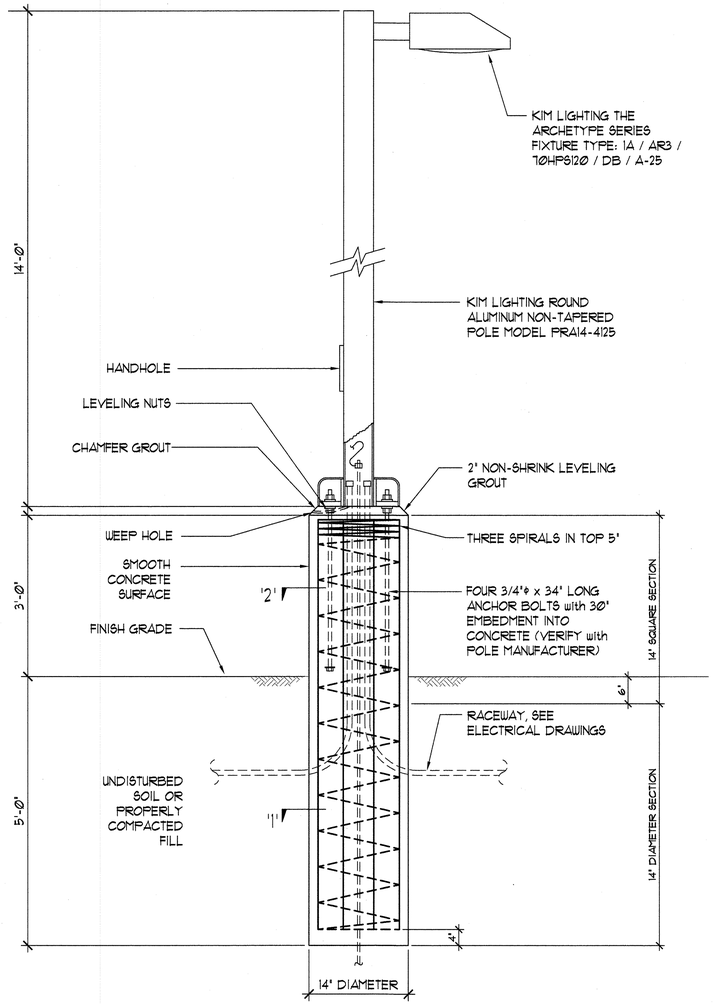

LIGHT POLE SECTION

SC: 3/4"=1'-0"

A
S-1

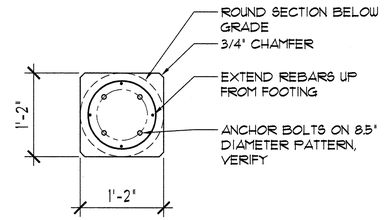

"2" SECTION - SQUARE BASE

SC: 1"=1'-0"

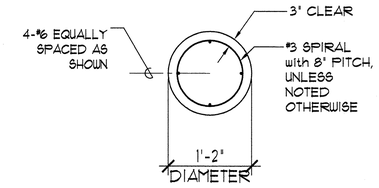

"1" SECTION - ROUND FOOTING

SC: 1"=1'-0"

REVISION DATE	DESCRIPTION	MADE BY	APPROVED

cp&e
Community Planning and Engineering, Inc.
Engineering Design Construction Management Infrastructure Planning
1100 Alakea Street, Sixth Floor Honolulu, Hawaii

EAST KAPOLEI II DEVELOPMENT INCREMENT 2B

HONOULIULI, EWA, OAHU, HAWAII
(DPP SUBD. FILE NO. 2011/SUB-155)
OWNER & DEVELOPER: DEPARTMENT OF HAWAIIAN HOME LANDS
TAX MAP KEY: 9-1-17: PORTION 110

LIGHT POLE NOTES & DETAILS

DRAWN BY: HM	ENGINEER: TT	CHECKED BY: TT
APPROVED:		

THOMAS Y. TANIMURA
LICENSED PROFESSIONAL ENGINEER
No. 4926-S
HAWAII, U.S.A.

04/30/14
Expiration Date of the License

THIS WORK WAS PREPARED BY ME OR UNDER MY SUPERVISION AND CONSTRUCTION OF THIS PROJECT WILL BE UNDER MY OBSERVATION.

FILE	POCKET	FOLDER	NO.

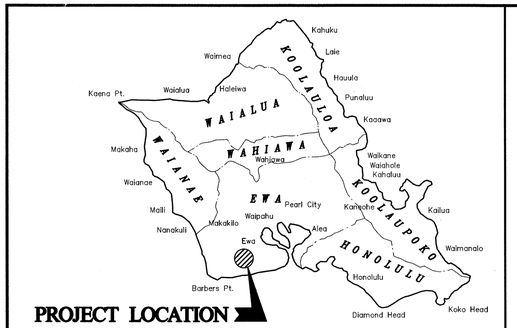

NORTH

ISLAND MAP

NOT TO SCALE

SCALE IN MILES 4 0 4 8

NORTH

LOCATION MAP

NOT TO SCALE

ELECTRICAL SYMBOLS

SYMBOL	DESCRIPTION	SYMBOL	DESCRIPTION
	STREET LIGHT, 150W HIGH PRESSURE SODIUM LUMINAIRE,		HECO 13" X 24" PULLBOX
	GALVANIZED STEEL POLE, XFMR BASE & BRACKET ARM,		HECO 17" X 30" PULLBOX
	SEE DETAIL A/E-23		HECO 2' x 4' PULLBOX
	STREET LIGHT, 100W HIGH PRESSURE SODIUM LUMINAIRE,		
	GALVANIZED STEEL POLE & BRACKET ARM, SEE DETAIL A/E-24		HECO 3' X 5' HANDHOLE
	STREET LIGHT, 70W HIGH PRESSURE SODIUM LUMINAIRE,		HECO 4' X 6' HANDHOLE
	GALVANIZED STEEL POLE & BRACKET ARM, SEE DETAIL A/E-24		HECO 5' X 7' HANDHOLE
	EXST. STREET LIGHT, 250W HIGH PRESSURE SODIUM LUMINAIRE		
	EXST. STREET LIGHT, 150W HIGH PRESSURE SODIUM LUMINAIRE		HECO 6' X 11' MANHOLE
	PARKING LOT LIGHT, 70W HIGH PRESSURE SODIUM LUMINAIRE,		EXST. HECO HANDHOLE
	ANODIZED ALUMINUM POLE & BRACKET ARM, SEE DETAIL B/E-21	S	EXST. HECO MANHOLE
			EXST. HECO MANHOLE
	GROUND ROD, 5/8" DIA. X 8'-0" (BMZ)		
			SIC 30" X 48" HANDHOLE
	BREAKLINE TO BEGIN & END DUCT SECTION TYPE		SIC 3' X 5' HANDHOLE
	ELECTRIC/SIGNAL DUCTLINE WITH DESIGNATORS;		SIC 4' X 6' HANDHOLE
A (2-2E)	INDICATES TYPE "A" DUCT SECTION WITH "2-2E" DUCTS. SEE SHEET E-15 & E-16 FOR DUCT SECTIONS AND SHEET E-18 FOR CONDUIT SCHEDULE		EXST. SIC MANHOLE
	STUB, CAP, & MARK CONDUIT(S) WITH CONCRETE MARKER, SEE DETAIL B/E-18		CATV 2' X 4' PULLBOX
	SAWCUT EXST. A.C. PAVEMENT, CONC. SIDEWALK, CURB & GUTTER PRIOR TO TRENCH EXCAVATION. RESTORE SUBBASE, BASECOURSE, PAVEMENT, CONC. SIDEWALK, CURB & GUTTER PER CITY		CATV 3' X 5' HANDHOLE
	REQUIREMENTS, THICKNESS SHALL MATCH EXST ROAD DESIGN		EXST. CATV HANDHOLE
SL	STREET LIGHT DUCTS & WIRING		
TS	TRAFFIC SIGNAL DUCT & PULLWIRE	TS	EXST. HTCO MANHOLE
			EXST. ELEC HANDHOLE/PULLBOX
e	EXST. UNDERGROUND DUCTLINE & WIRING		
t	EXST. UNDERGROUND TEL. CABLES		SECONDARY POWER 24" X 36" PULLBOX, SEE DETAIL A/E-21
sl	EXST. UNDERGROUND STREET LIGHT CABLES & CONDUITS		
ts	EXST. UNDERGROUND TRAFFIC SIGNAL CONDUITS		STREET LIGHT PULLBOX, TYPE "B", SEE DETAIL B/E-22
p	EXST. UNDERGROUND SECONDARY POWER CABLES AND CONDUIT		TRAFFIC SIGNAL PULLBOX, TYPE "B", SEE DETAIL B/E-22
20 999 / 77	NON-METERED STREET LIGHT I.D. TAG, 20 = AREA CODE NO., 999 = LIGHT NO., 77 = POLE NO., SEE DET G/E-23	M	METERING EQUIPMENT & CABINET, SEE DETAIL
			HECO TRANSFORMER PAD LOT, SEE DETAIL A/E-17
			HECO SWITCHING EASEMENT PAD LOT, SEE DETAIL A/E-18
			EXST. HECO XFMR EASEMENT PAD LOT
			EXST. HECO SWITCHING EASEMENT PAD LOT
		M	EXST. METERING EQUIPMENT
		S	CONCRETE STUB OUT MARKER, SEE DETAIL B/E-18
		V	CATV POWER SUPPLY EQUIP., 6' X 6' EASEMENT, SEE DETAIL B/E-19
		1	NOTE SYMBOL, SEE PLAN FOR NOTES

GENERAL NOTES

1. PROVIDE 5' MINIMUM CLEAR BETWEEN STREET LIGHT POLES & SEWER LATERALS.
2. PROVIDE 3' MINIMUM CLEAR BETWEEN PULLBOXES & SEWER LATERALS.
3. PROVIDE 6' MINIMUM CLEAR BETWEEN TRANSFORMER PADS & SEWER LATERALS (DO NOT STRADDLE).
4. PROVIDE 3' MINIMUM CLEAR BETWEEN DUCTLINES & SEWER LINES.
5. CONTRACTOR SHALL VERIFY SEWER LATERAL LOCATIONS WITH CIVIL SHEETS.
6. PROVIDE 3' MINIMUM HORIZONTAL CLEAR & 6" VERTICAL CLEAR BETWEEN WATER LINES & ALL ELECTRICAL SYSTEMS.
7. CONTRACTOR SHALL BE RESPONSIBLE TO ARRANGE WITH THE GENERAL CONTRACTOR TO IDENTIFY THE LOCATIONS OF CIVIL SITE UTILITIES, DRIVEWAYS, ETC. PRIOR TO ELECTRICAL CONTRACTORS LAYOUT OF ELECTRIC, TELEPHONE, STREET LIGHT, TRAFFIC SIGNAL, AND CATV SYSTEMS.

NOTES FOR CONSTRUCTION

a. THE LOCATION OF OVERHEAD AND UNDERGROUND FACILITIES SHOWN ON THE PLANS ARE FROM EXISTING RECORDS WITH VARYING DEGREES OF ACCURACY AND ARE NOT GUARANTEED AS SHOWN. THE CONTRACTOR SHALL EXERCISE EXTREME CAUTION WHENEVER CONSTRUCTION CROSSES OR IS IN PROXIMITY OF UNDERGROUND LINES AND SHALL MAINTAIN ADEQUATE CLEARANCE WHEN OPERATING EQUIPMENT UNDER ANY OVERHEAD LINES.

b. THE CONTRACTOR IS TO COMPLY WITH THE DIRECTIONS OF THE STATE OF HAWAII OCCUPATIONAL SAFETY AND HEALTH LAW (DOSH).

c. WHEN TRENCH EXCAVATION IS ADJACENT TO EXISTING STRUCTURES OR FACILITIES, THE CONTRACTOR IS RESPONSIBLE FOR PROPERLY SHEETING AND BRACING THE EXCAVATION AND STABILIZING THE EXISTING GROUND TO RENDER IT SAFE AND SECURE FROM POSSIBLE SLIDES, CAVE-INS AND SETTLEMENT, AND FOR PROPERLY SUPPORTING EXISTING STRUCTURES AND FACILITIES WITH BEAMS, STRUTS OR UNDERPINNING TO FULLY PROTECT IT FROM DAMAGE.

d. AS REQUIRED BY THE CITY AND COUNTY OF HONOLULU, THE CONTRACTOR SHALL PROVIDE OFF-DUTY POLICE OFFICERS TO CONTROL THE FLOW OF TRAFFIC.

e. WHERE PEDESTRIAN WALKWAYS EXIST, SUCH WALKWAYS SHALL BE MAINTAINED IN PASSABLE CONDITION OR OTHER FACILITIES FOR PEDESTRIANS SHALL BE PROVIDED. PASSAGE BETWEEN WALKWAYS AT INTERSECTIONS SHALL LIKEWISE BE PROVIDED.

f. DRIVEWAYS SHALL BE KEPT OPEN UNLESS THE OWNERS OF THE PROPERTY USING THESE RIGHT-OF-WAYS ARE OTHERWISE PROVIDED FOR SATISFACTORILY.

g. THE UNDERGROUND PIPES, CABLES OR DUCTLINES KNOWN BY THE ENGINEER TO EXIST FROM HIS SEARCH OF RECORDS ARE INDICATED ON THE PLANS. THE CONTRACTOR SHALL VERIFY THE LOCATION AND DEPTH OF THE FACILITIES AND EXERCISE PROPER CARE IN EXCAVATING THE AREA. WHEREVER CONNECTIONS OF NEW UTILITIES TO EXISTING UTILITIES ARE SHOWN ON THE PLANS, THE CONTRACTOR SHALL EXPOSE THE EXISTING LINES AT THE PROPOSED CONNECTIONS TO VERIFY THEIR LOCATIONS AND DEPTHS PRIOR TO EXCAVATION FOR THE NEW LINES.

DRAWING REVIEW

Reviewed for HECO's Facilities Only

Date 12/19/12 By

Customer Installation Department
Hawaiian Electric Company, Inc.

HECO's review of these drawings shall in no way relieve the Customer, its Consultant, its Contractor or anyone acting on the Customer's behalf from the responsibility for engineering, design, materials and any other liability associated with this project.

APPROVED BY:

1/28/13

CHIEF, TRAFFIC SIGNALS AND TECHNOLOGY — DATE
DEPT. OF TRANSPORTATION SERVICES

GARY I. FUNASAKI
LICENSED PROFESSIONAL ENGINEER
No. 4195-E
HAWAII, U.S.A.

13 NOV 2012

THIS WORK WAS PREPARED BY ME OR UNDER MY SUPERVISION. CONSTRUCTION OF THIS PROJECT WILL BE UNDER MY OBSERVATION. LICENSE EXPIRATION DATE: 04/30/14

REVISION DATE	DESCRIPTION	MADE BY	APPROVED

cp&e **Community Planning and Engineering, Inc.**
Engineering Design | Construction Management | Infrastructure Planning
1100 Alakea Street, 26th Floor — Honolulu, Hawaii

EAST KAPOLEI II DEVELOPMENT INCREMENT 2B

HONOULIULI, EWA, OAHU, HAWAII
(DPP SUBD. FILE NO. 2011/SUB-155
OWNER & DEVELOPER: DEPARTMENT OF HAWAIIAN HOME LANDS
TAX MAP KEY: 9-1-17: Portion 110

ELECTRICAL SYMBOLS, MAPS, NOTES

DRAWN BY: CAD	ENGINEER: GF	CHECKED BY: GF

APPROVED:

HAWAIIAN ELECTRIC CO. — DATE

CHIEF, TRAFFIC REVIEW BRANCH, D.P.P. — DATE 2/15/13

SANDWICH ISLES COMMUNICATIONS, INC. — DATE 12/19/12

CHIEF, MECHANICAL/ELECTRICAL DIVISION, D.D.C. — DATE 1/31/2013

FILE	POCKET	FOLDER	NO.

DWG. NO. **E-1**

SHEET 41 OF 78 SHEETS

LAST SAVED: 02/06/13 @ 10:55:56 BY: RH PLOT SC 12.000000=12.000000
Z:\AOA\YR06\E2DTS\Sub\#\01_2-2B\#\#_3.dwg01

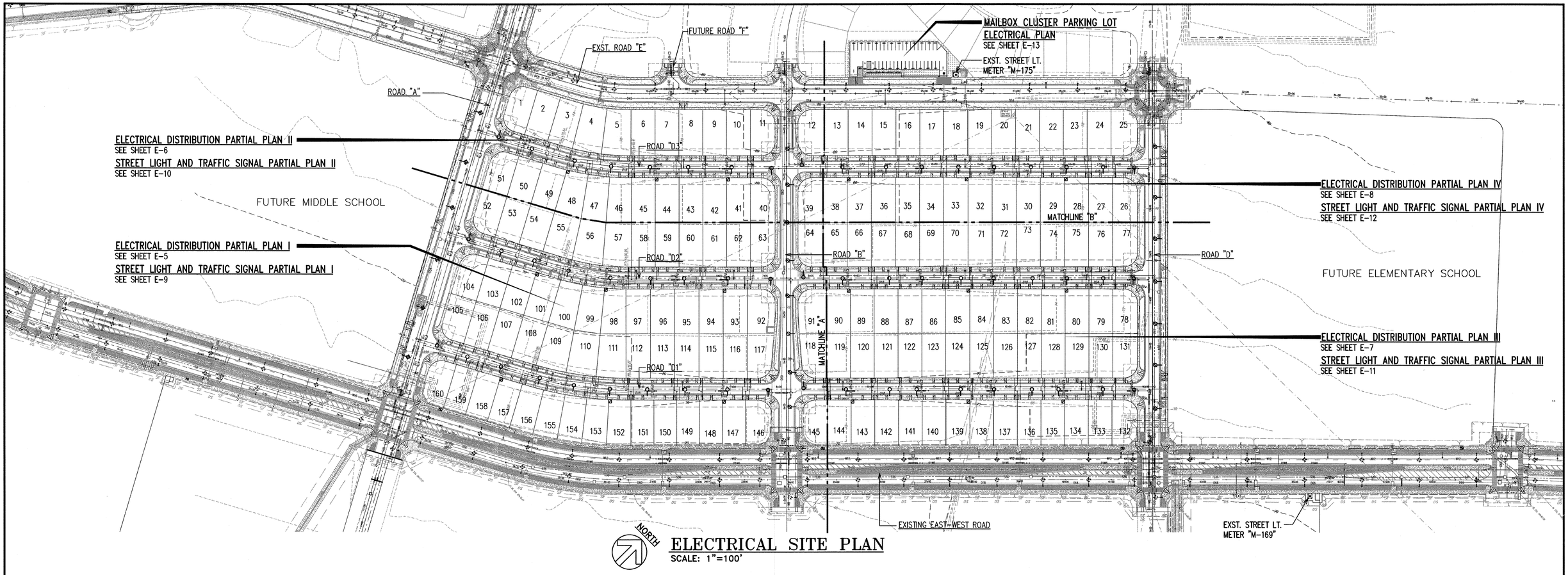

ELECTRICAL SITE PLAN

SCALE: 1"=100'

EQUIPMENT SCHEDULE

THE HAWAIIAN ELECTRIC CO. (HECO), SANDWICH ISLES COMMUNICATIONS, INC. (SIC), COMMUNITY ANTENNA TELEVISION, TRAFFIC SIGNAL & STREET LIGHTING PULLBOXES, HANDHOLE, TRANSFORMER PAD LOTS & SWITCHING EQUIPMENT PAD LOTS SHALL BE CONSTRUCTED BY THE CONTRACTOR AS SHOWN IN THESE DRAWINGS & IN ACCORDANCE WITH THE FOLLOWING STANDARD DRAWINGS:

TYPE	DESCRIPTION
13" X 24" HECO PULLBOX	13" X 24" NON-CONCRETE PULLBOX, COVER WITH LOCKING DEVICE, PROVIDED IN ACCORDANCE WITH HECO STANDARD DRAWINGS NO. 30-2006 & 011314.
17" X 30" HECO PULLBOX	17" X 30" NON-CONCRETE PULLBOX, COVER WITH LOCKING DEVICE, PROVIDED IN ACCORDANCE WITH HECO STANDARD DRAWINGS NO. 30-2006 & 011314.
2' X 4' HECO PULLBOX	2' X 4' PRECAST CONCRETE PULLBOX WITH PRECAST CONCRETE COVER, PROVIDED IN ACCORDANCE WITH HECO STANDARD DRAWING NO. 30-2005.
3' X 5' HECO HANDHOLE	3' X 5' PRECAST CONCRETE HANDHOLE WITH PRECAST CONCRETE COVER, PROVIDED IN ACCORDANCE WITH HECO STANDARD DRAWING NO. 101020.
4' X 6' HECO HANDHOLE	4'-0" X 7'-0" REINFORCED CONCRETE HANDHOLE WITH PRECAST CONCRETE COVERS, PROVIDED IN ACCORDANCE WITH HECO STANDARD NO. 101024.
5' X 8' HECO HANDHOLE	5'-0" X 8'-0" REINFORCED CONCRETE HANDHOLE WITH PRECAST CONCRETE COVERS, PROVIDED IN ACCORDANCE WITH HECO STANDARD NO. 100907.
6' X 11' HECO MANHOLE	6' X 11' REINFORCED CONCRETE MANHOLE WITH TRAFFIC RATED FRAME AND COVER. PROVIDED IN ACCORDANCE WITH HECO STANDARD DRAWING NO. 100726.
TYPE "B" ST. LT. PULLBOX (CITY & COUNTY)	TYPE "B" PRECAST CONCRETE PULLBOX WITH POLYMER CONCRETE COVER PROVIDED IN ACCORDANCE WITH C&C OF HONOLULU, DEPARTMENT OF TRANSPORTATION SERVICES.
13" X 24" COMMUNICATION PULLBOX	13" X 24" X 36" POLYMER CONCRETE HANDHOLE WITH NON-SKID SURFACE POLYMER CONCRETE 20K "TRAFFIC" RATED COVER, "SIC" INSCRIBED ON COVER. PROVIDED IN ACCORDANCE WITH SANDWICH ISLES COMMUNICATIONS REQUIREMENTS, TYPE UHC 13x24x36
30" X 48" COMMUNICATION HANDHOLE	2'-6" X 4'-0" X 2'-9" POLYMER CONCRETE HANDHOLE WITH NON-SKID SURFACE POLYMER CONCRETE 20K "TRAFFIC" RATED COVERS, "SIC" INSCRIBED ON COVERS. PROVIDED IN ACCORDANCE WITH SANDWICH ISLES COMMUNICATIONS REQUIREMENTS, TYPE UHC 30x48x33.
3' X 5' COMMUNICATION MANHOLE	3'-9" X 5'-9" X 3'-7" REINFORCED CONCRETE MANHOLE WITH TRAFFIC RATED FRAME AND COVERS, PROVIDED IN ACCORDANCE WITH SANDWICH ISLES COMMUNICATIONS REQUIREMENTS TYPE UM-3 X 5. VERIFY DEPTH OF MANHOLE.
3' X 5' COMMUNICATION HANDHOLE	3'-9" X 5'-9" X 3'-10½" POLYMER CONCRETE HANDHOLE WITH TWO PIECE HINGED NON-SKID SURFACE POLYMER CONCRETE 20K "TRAFFIC" RATED COVERS, "SIC" INSCRIBED ON COVERS. PROVIDED IN ACCORDANCE WITH SANDWICH ISLES COMMUNICATIONS REQUIREMENTS, TYPE UH3x5.
4' X 6' COMMUNICATION MANHOLE	4'-0" X 6'-0" X 6'-1/4" REINFORCED CONCRETE MANHOLE WITH TRAFFIC RATED FRAME AND COVERS, PROVIDED IN ACCORDANCE WITH SANDWICH ISLES COMMUNICATIONS REQUIREMENTS, TYPE UM-4 X 6. VERIFY DEPTH OF MANHOLE.
TYPE "A" TRAFFIC SIGNAL PULLBOX (CITY & COUNTY)	TYPE "A" PRECAST CONCRETE PULLBOX WITH POLYMER CONCRETE COVER PROVIDED IN ACCORDANCE WITH C&C OF HONOLULU, DEPARTMENT OF TRANSPORTATION SERVICES.
TYPE "B" TRAFFIC SIGNAL PULLBOX (CITY & COUNTY)	TYPE "B" PRECAST CONCRETE PULLBOX WITH POLYMER CONCRETE COVER PROVIDED IN ACCORDANCE WITH C&C OF HONOLULU, DEPARTMENT OF TRANSPORTATION SERVICES.
TYPE "C" TRAFFIC SIGNAL PULLBOX (CITY & COUNTY)	TYPE "C" PRECAST CONCRETE PULLBOX WITH POLYMER CONCRETE COVERS, PROVIDED IN ACCORDANCE WITH C & C OF HONOLULU DEPARTMENT OF TRANSPORTATION SERVICES STANDARD DRAWINGS.
6' X 7' HECO TRANSFORMER PAD LOT	6' X 7' TRANSFORMER PAD LOT WITH REINFORCED CONCRETE TRANSFORMER PAD AND GROUND ROD PER HECO STANDARD DRAWING NOS. 30-5001 & 011249.
10' X 14' HECO AUTOMATIC SWITCHING EQUIPMENT PAD LOT	10' X 14' AUTOMATIC TRANSFER SWITCHING EQUIPMENT ENCLOSURE PAD LOT WITH REINFORCED CONCRETE PAD AND GROUND ROD, PER HECO STANDARD DRAWING NO. 30-5040.
2' X 4' CATV PULLBOX	2'-0" X 4'-0" PRECAST CONCRETE PULLBOX WITH TWO-PIECE "NON-SLIP" POLYMER "PARKWAY" RATED COVERS, SIMILAR TO HTCO 2' X 4' PULLBOX, HTCO DRAWING NO. 34056, EXCEPT WITH "CATV" INSCRIBED ON COVER.
3 X 5 CATV HANDHOLE	3'-0" X 5'-0" REINFORCED PLASTIC HANDHOLE WITH TWO-PIECE "NON-SLIP" POLYMER "PARKWAY" RATED COVERS, SIDE ENTRY KNOCKOUTS, GROUND ROD, SIMILAR TO HTCO DRAWING NO. 34110 FOR AREAS NOT SUBJECT TO TRAFFIC, EXCEPT WITH "CATV" INSCRIBED ON COVER.

DRAWING REVIEW

Reviewed for HECO's Facilities Only

Date 12/13/12 By

Customer Installation Department
Hawaiian Electric Company, Inc.

HECO's review of these drawings shall in no way relieve the Customer, its Consultant, its Contractor or anyone acting on the Customer's behalf from the responsibility for engineering, design, materials and any other liability associated with this project.

APPROVED BY:

CHIEF, TRAFFIC SIGNALS AND TECHNOLOGY DEPT. OF TRANSPORTATION SERVICES — DATE 1/28/13

100' 50' 0 100' 200' 300'

SCALE: 1"=100'

GRAPHIC SCALE

GARY I. FUNASAKI LICENSED PROFESSIONAL ENGINEER No. 4195-E HAWAII, U.S.A.

13 NOV 2012

THIS WORK WAS PREPARED BY ME OR UNDER MY SUPERVISION. CONSTRUCTION OF THIS PROJECT WILL BE UNDER MY OBSERVATION. LICENSE EXPIRATION DATE: 04/30/14

REVISION DATE	DESCRIPTION	MADE BY	APPROVED

Community Planning and Engineering, Inc.
Engineering Design | Construction Management | Infrastructure Planning
1100 Alakea Street, 26th Floor Honolulu, Hawaii

EAST KAPOLEI II DEVELOPMENT INCREMENT 2B

HONOULIULI, EWA, OAHU, HAWAII
(DPP SUBD. FILE NO. 2011/SUB-155
OWNER & DEVELOPER: DEPARTMENT OF HAWAIIAN HOME LANDS
TAX MAP KEY: 9-1-17: Portion 110

ELECTRICAL SITE PLAN, SCHEDULES

DRAWN BY: CAD	ENGINEER: GF	CHECKED BY: GF

APPROVED:

HAWAIIAN ELECTRIC CO. — DATE

CHIEF, TRAFFIC ENGINEERING BRANCH, D.P.P. — DATE

SANDWICH ISLES COMMUNICATIONS, INC. — DATE 12/19/12

CHIEF, MECHANICAL/ELECTRICAL DIVISION, D.D.C. — DATE 1/31/2013

DWG. NO. E-2

SHEET 42 OF 78 SHEETS

FILE	POCKET	FOLDER	NO.

LAST SAVE: 09/09/12 @ 10:54:03 BY: RN PLOT SC: 1=100
Z:\CAD\PROJECTS\2906#F\E02_2906#F_SHT.DWG XREFS: XCAD-XBASE_EKA_INC_2B_(6-29-12)_.DRN_2906#F_BACKGROUND_.DRN_2906#F_ELEC-ALL

HAWAIIAN ELECTRIC COMPANY (HECO) NOTES

1. LOCATION OF HECO FACILITIES

   THE LOCATION OF HECO'S OVERHEAD AND UNDERGROUND FACILITIES SHOWN ON THE PLANS ARE FROM EXISTING RECORDS WITH VARYING DEGREES OF ACCURACY AND ARE NOT GUARANTEED AS SHOWN. THE CONTRACTOR SHALL VERIFY IN THE FIELD THE LOCATIONS OF THE FACILITIES AND SHALL EXERCISE PROPER CARE IN EXCAVATING AND WORKING IN THE AREA. WHEREVER CONNECTIONS OF NEW UTILITIES TO EXISTING UTILITIES AND UTILITY CROSSINGS ARE SHOWN, THE CONTRACTOR SHALL EXPOSE THE EXISTING LINES AT THE PROPOSED CONNECTIONS AND CROSSINGS TO VERIFY THE DEPTHS PRIOR TO EXCAVATION FOR THE NEW LINES. THE CONTRACTOR SHALL BE RESPONSIBLE FOR ANY DAMAGES TO HECO'S FACILITIES WHETHER SHOWN OR NOT SHOWN ON THE PLANS.

2. COMPLIANCE WITH HAWAII OCCUPATIONAL SAFETY AND HEALTH LAWS

   THE CONTRACTOR SHALL COMPLY WITH THE STATE OF HAWAII'S OCCUPATIONAL SAFETY AND HEALTH LAWS AND REGULATIONS, INCLUDING WITHOUT LIMITATION, THOSE RELATED TO WORKING ON OR NEAR EXPOSED OR ENERGIZED ELECTRICAL LINES AND EQUIPMENT.

3. EXCAVATION PERMIT

   THE CONTRACTOR SHALL OBTAIN AN EXCAVATION PERMIT FROM HECO'S TECHNICAL DIVISION (543-5654) LOCATED AT 820 WARD AVENUE, 4TH FLOOR, TWO WEEKS PRIOR TO STARTING CONSTRUCTION. PLEASE REFER TO OUR REQUEST NUMBER AT THAT TIME.

4. CAUTION!!! ELECTRICAL HAZARD!!!

   EXISTING HECO OVERHEAD AND UNDERGROUND LINES ARE ENERGIZED AND WILL REMAIN ENERGIZED DURING CONSTRUCTION UNLESS PRIOR SPECIAL ARRANGEMENTS HAVE BEEN MADE WITH HECO. ONLY HECO PERSONNEL ARE TO HANDLE THESE ENERGIZED LINES AND ERECT TEMPORARY GUARDS TO PROTECT THESE LINES FROM DAMAGE. THE CONTRACTOR SHALL WORK CAUTIOUSLY AT ALL TIMES TO AVOID ACCIDENTS AND DAMAGE TO EXISTING HECO FACILITIES, WHICH CAN RESULT IN ELECTROCUTION.

5. OVERHEAD LINES

   STATE LAW (OSHA 1910.269 (k) (28)) REQUIRES THAT A WORKER AND THE LONGEST OBJECT HE OR SHE MAY CONTACT CANNOT COME CLOSER THAN A MINIMUM RADIAL CLEARANCE OF 10 FEET WHEN WORKING CLOSE TO OR UNDER ANY OVERHEAD LINES RATED 50KV AND BELOW. FOR EACH ADDITIONAL 1KV ABOVE 50KV, AN ADDITIONAL 0.4 INCH SHALL BE ADDED TO THE 10- FOOT CLEARANCE REQUIREMENT. THE PRECEDING INFORMATION ON LINE CLEARANCE REQUIREMENTS IS PROVIDED AS A CONVENIENCE AND IT IS THE CONTRACTOR'S RESPONSIBILITY TO BE INFORMED OF AND COMPLY WITH ANY REVISIONS OR AMENDMENTS TO THE LAW.

   SHOULD THE CONTRACTOR ANTICIPATE THAT HIS WORK WILL RESULT IN THE NEED TO ENCROACH WITHIN THE MINIMUM REQUIRED CLEARANCE AT ANY TIME, THE CONTRACTOR SHALL NOTIFY HECO AT LEAST FOUR (4) WEEKS PRIOR TO THE PLANNED ENCROACHMENT SO THAT, IF FEASIBLE, THE NECESSARY PROTECTIONS (E.G. RELOCATE, DE- ENERGIZE, OR BLANKET HECO LINES) CAN BE PUT IN PLACE. HECO'S COST OF SAFEGUARDING ITS LINES WILL BE CHARGED TO THE CONTRACTOR.

   CONTACT HECO'S CUSTOMER INSTALLATIONS DEPARTMENT AT 543-7846 FOR ASSISTANCE IN IDENTIFYING AND SAFEGUARDING OVERHEAD POWER LINES.

   REFER TO SECTION X OF HECO'S ELECTRIC SERVICE INSTALLATION MANUAL FOR ADDITIONAL GUIDELINES WHEN WORKING AROUND HECO'S FACILITIES. A COPY MAY BE OBTAINED FROM HECO'S CUSTOMER INSTALLATIONS DEPARTMENT.

6. POLE BRACING

   A MINIMUM CLEARANCE OF 10 FEET MUST BE MAINTAINED WHEN EXCAVATING AROUND UTILITY POLES AND/OR THEIR ANCHOR SYSTEM TO PREVENT WEAKENING OR POLE SUPPORT FAILURE. SHOULD WORK REQUIRE EXCAVATING WITHIN 10 FEET OF A POLE AND/OR ITS ANCHOR SYSTEM, THE CONTRACTOR SHALL PROTECT, SUPPORT, SECURE, AND TAKE ALL OTHER PRECAUTIONS TO PREVENT DAMAGE TO OR LEANING OF THESE POLES. THE CONTRACTOR IS RESPONSIBLE FOR ALL ASSOCIATED COSTS TO BRACE, REPAIR, OR STRAIGHTEN POLES. ALL MEANS OF STRUCTURAL SUPPORT FOR THE POLE PROPOSED BY THE CONTRACTOR SHALL FIRST BE REVIEWED BY HECO BEFORE IMPLEMENTATION. FOR POLE BRACING INSTRUCTIONS, THE CONTRACTOR SHALL CALL THE HECO CONSTRUCTION AND MAINTENANCE DEPT., CUSTOMER & SYSTEM SUPERINTENDENT AT 543-4223 A MINIMUM OF TWO (2) WEEKS IN ADVANCE.

7. UNDERGROUND LINES

   THE CONTRACTOR SHALL EXERCISE EXTREME CAUTION WHENEVER CONSTRUCTION CROSSES OR IS IN CLOSE PROXIMITY OF UNDERGROUND LINES. HECO'S EXISTING ELECTRICAL CABLES ARE ENERGIZED AND WILL REMAIN ENERGIZED DURING CONSTRUCTION. ONLY HECO PERSONNEL ARE TO BREAK INTO EXISTING HECO FACILITIES, HANDLE THESE CABLES, AND ERECT TEMPORARY GUARDS TO PROTECT THESE CABLES FROM DAMAGE. THE COST OF HECO'S ASSISTANCE IN PROVIDING PROPER SUPPORT AND PROTECTION OF ITS UNDERGROUND LINES WILL BE CHARGED TO THE CONTRACTOR. SPECIAL PRECAUTIONS ARE REQUIRED WHEN EXCAVATING NEAR HECO'S 138KV UNDERGROUND LINES (SEE HECO INSTRUCTIONS TO CONSULTANTS/CONTRACTORS ON "EXCAVATION NEAR HECO'S UNDERGROUND 138KV LINES" FOR DETAILED REQUIREMENTS).

   FOR VERIFICATION OF UNDERGROUND LINES, THE CONTRACTOR SHALL CALL HECO'S UNDERGROUND DIVISION AT 543-7049 A MINIMUM OF 72 HOURS IN ADVANCE.

   FOR ASSISTANCE IN PROVIDING PROPER SUPPORT AND PROTECTION OF THESE LINES, THE CONTRACTOR SHALL CALL HECO'S CONSTRUCTION & MAINTENANCE DEPT., CUSTOMER & SYSTEM SUPERINTENDENT, AT 543-4223, A MINIMUM OF TWO (2) WEEKS IN ADVANCE.

8. UNDERGROUND FUEL PIPELINES

   THE CONTRACTOR SHALL EXERCISE EXTREME CAUTION WHENEVER CONSTRUCTION CROSSES OR IS IN CLOSE PROXIMITY OF HECO'S UNDERGROUND FUEL OIL PIPELINES. SPECIAL PRECAUTIONS ARE REQUIRED WHEN EXCAVATING NEAR HECO'S UNDERGROUND FUEL OIL PIPELINES (SEE HECO INSTRUCTIONS TO CONSULTANTS/CONTRACTORS ON "EXCAVATION NEAR HECO'S UNDERGROUND FUEL PIPELINES" FOR DETAILED REQUIREMENTS).

9. EXCAVATIONS

   WHEN TRENCH EXCAVATION IS ADJACENT TO OR BENEATH HECO'S EXISTING STRUCTURES OR FACILITIES, THE CONTRACTOR IS RESPONSIBLE FOR:

   a) SHEETING AND BRACING THE EXCAVATION AND STABILIZING THE EXISTING GROUND TO RENDER IT SAFE AND SECURE AND TO PREVENT POSSIBLE SLIDES, CAVE-INS, AND SETTLEMENTS.
   b) PROPERLY SUPPORTING EXISTING STRUCTURES OR FACILITIES WITH BEAMS, STRUTS, OR UNDER-PINNINGS TO FULLY PROTECT IT FROM DAMAGE.
   c) BACKFILLING WITH PROPER BACKFILL MATERIAL INCLUDING SPECIAL THERMAL BACKFILL WHERE EXISTING (REFER TO ENGINEERING DEPARTMENT FOR THERMAL BACKFILL SPECIFICATIONS).

10. RELOCATION OF HECO FACILITIES

    ANY WORK REQUIRED TO RELOCATE OR MODIFY HECO FACILITIES SHALL BE DONE BY HECO, OR BY THE CONTRACTOR UNDER HECO'S SUPERVISION. THE CONTRACTOR SHALL BE RESPONSIBLE FOR ALL COORDINATION, AND SHALL PROVIDE NECESSARY SUPPORT FOR HECO'S WORK, WHICH MAY INCLUDE, BUT NOT BE LIMITED TO, EXCAVATION AND BACKFILL, PERMITS AND TRAFFIC CONTROL, BARRICADING, AND RESTORATION OF PAVEMENT, SIDEWALKS, AND OTHER FACILITIES.

    ALL COSTS ASSOCIATED WITH ANY RELOCATION OR MODIFICATION (EITHER TEMPORARY OR PERMANENT) FOR THE CONVENIENCE OF THE CONTRACTOR, OR TO ENABLE THE CONTRACTOR TO PERFORM HIS WORK IN A SAFE AND EXPEDITIOUS MANNER IN FULFILLING HIS CONTRACT OBLIGATIONS SHALL BE BORNE BY THE CONTRACTOR.

11. CONFLICTS

    ANY REDESIGN OR RELOCATION OF HECO'S FACILITIES NOT SHOWN ON THE PLANS MAY BE CAUSE FOR LENGTHY DELAYS. THE CONTRACTOR ACKNOWLEDGES THAT HECO IS NOT RESPONSIBLE FOR ANY DELAY OR DAMAGE THAT MAY ARISE AS A RESULT OF ANY CONFLICTS DISCOVERED OR IDENTIFIED WITH RESPECT TO THE LOCATION OR CONSTRUCTION OF HECO'S ELECTRICAL FACILITIES IN THE FIELD, REGARDLESS OF WHETHER THE CONTRACTOR HAS MET THE REQUESTED MINIMUM ADVANCE NOTICES. IN ORDER TO MINIMIZE ANY DELAY OR IMPACT ARISING FROM SUCH CONFLICTS, HECO SHOULD BE NOTIFIED IMMEDIATELY UPON DISCOVERY OR IDENTIFICATION OF SUCH CONFLICT.

12. DAMAGE TO HECO FACILITIES

    THE CONTRACTOR SHALL BE RESPONSIBLE FOR THE PROTECTION OF ALL HECO SURFACE AND SUBSURFACE UTILITIES AND SHALL BE RESPONSIBLE FOR ANY DAMAGES TO HECO'S FACILITIES AS A RESULT OF HIS OPERATIONS. THE CONTRACTOR SHALL IMMEDIATELY REPORT SUCH DAMAGES TO HECO'S TROUBLE DISPATCHER AT 548-7961. REPAIR WORK SHALL BE DONE BY HECO OR BY THE CONTRACTOR UNDER HECO'S SUPERVISION COSTS FOR DAMAGES TO HECO'S FACILITIES SHALL BE BORNE BY THE CONTRACTOR.

    IN CASE OF DAMAGE OR SUSPECTED DAMAGE TO HECO'S FUEL PIPELINE, THE CONTRACTOR SHALL IMMEDIATELY NOTIFY HECO'S HONOLULU POWER PLANT SHIFT SUPERVISOR AT 533-2102 (A 24-HOUR NUMBER) SO HECO PERSONNEL CAN SECURE THE DAMAGED SECTION AND REPORT ANY OIL SPILLS TO THE PROPER AUTHORITIES. ALL COSTS ASSOCIATED WITH THE DAMAGE, REPAIR, AND OIL SPILL CLEANUP SHALL BE BORNE BY THE CONTRACTOR.

13. HECO STAND-BY PERSONNEL

    THE CONTRACTOR MAY REQUEST HECO TO PROVIDE AN INSPECTOR TO STAND-BY DURING CONSTRUCTION NEAR HECO'S FACILITIES. THE COST OF SUCH INSPECTION WILL BE CHARGED TO THE CONTRACTOR.

    THE CONTRACTOR SHALL CALL THE HECO CONSTRUCTION AND MAINTENANCE DEPT., CUSTOMER & SYSTEM SUPERINTENDENT AT 543-4223 A MINIMUM OF 5 WORKING DAYS IN ADVANCE TO ARRANGE FOR HECO STAND-BY PERSONNEL.

14. CLEARANCES

    THE FOLLOWING CLEARANCES SHALL BE MAINTAINED BETWEEN HECO'S DUCTLINE AND ALL ADJACENT STRUCTURES (CHARTED AND UNCHARTED) IN THE TRENCH:

STRUCTURE TYPE	MINIMUM CLEARANCE(INCHES)
WATER LINES, PARALLEL	36 (A)
WATER LINES, CROSSING	12 (B)
SEWER LINES, PARALLEL	36 (C)
SEWER LINES, CROSSING	24 (D)
DRAIN LINES, PARALLEL	12
DRAIN LINES, CROSSING	6 (E)
ELECTRICAL AND GAS LINES, PARALLEL	12
ELECTRICAL AND GAS LINES, CROSSING	12
TELEPHONE LINES, PARALLEL	6 (E)
TELEPHONE LINES, CROSSING	6 (E)
CHEVRON OIL LINES, PARALLEL	36
CHEVRON OIL LINES, CROSSING	48 BELOW OIL LINE (F)

    A. THE MINIMUM HORIZONTAL CLEARANCES TO WATER LINES PARALLEL TO ELECTRICAL DUCTLINES MUST BE INCREASED TO 60 INCHES IF THE WATER LINE IS GREATER THAN 16 INCHES IN DIAMETER
    B. THE MINIMUM VERTICAL CLEARANCES TO WATER LINES CROSSING ELECTRICAL DUCTLINES CAN BE REDUCED TO 6 INCHES IF THE ELECTRICAL DUCTLINE STRUCTURE IS CONCRETE ENCASED AND IS BELOW THE WATER LINE AND THE WATER LINE IS LESS THAN 16 INCHES IN DIAMETER.
    C. A MINIMUM HORIZONTAL CLERANCE OF 36 INCHES IS REQUIRED BETWEEN NEW HANDHOLES AND EXISTING SEWER LATERALS.
    D. THE MINIMUM VERTICAL CLEARANCES TO SEWER PIPES CROSSING ELECTRICAL DUCTLINES CAN BE REDUCED TO 12 INCHES IF THE SEWER PIPE IS JACKETED IN CONCRETE.
    E. THE MINIMUM CLEARANCES SHALL BE INCREASED TO 12 INCHES IF THE ELECTRICAL DUCTLINE IS DIRECT BURIED.
    F. THE MINIMUM VERTICAL CLEARANCES TO OIL LINES CROSSING ELECTRICAL DUCTLINES CAN BE REDUCED TO 24 INCHES BELOW OIL LINES IF THE CROSSINGS ARE ENCASED IN 6 INCHES OF CONCRETE.
    G. THE CONTRACTOR SHALL NOTIFY THE CONSTRUCTION MANAGER & HECO OF ANY HEAT SOURCES (POWER CABLE DUCT BANK, STEAMLINE, ETC.) ENCOUNTERED THAT ARE NOT PROPERLY IDENTIFIED ON THE DRAWING.

    THE FOLLOWING CLEARANCE SHALL BE MAINTAINED BETWEEN HECO'S FUEL OIL PIPELINES AND ALL ADJACENT STRUCTURES: 24-INCHES, PARALLEL OR CROSSING. THE MINIMUM CLEARANCE CAN BE REDUCED TO 12 INCHEL (PARALLEL AND BELOW ONLY) IF THE STRUCTURE IS JACKETED IN CONCRETE.

15. INDEMNITY

    THE CONTRACTOR SHALL INDEMNIFY, DEFEND AND HOLD HARMLESS HECO FROM AND AGAINST ALL LOSSES, DAMAGES, CLAIMS, AND ACTIONS, INCLUDING BUT NOT LIMITED TO REASONABLE ATTORNEY'S FEES AND COSTS BASED UPON OR ARISING OUT OF DAMAGE TO PROPERTY OR INJURIES TO PERSONS, OR OTHER TORTIOUS ACTS CAUSED OR CONTRIBUTED TO BY CONTRACTOR OR ANYONE ACTING UNDER ITS DIRECTION OR CONTROL OR ON ITS BEHALF; PROVIDED CONTRACTOR'S INDEMNITY SHALL NOT BE APPLICABLE TO ANY LIABILITY BASED UPON THE SOLE NEGLIGENCE OF HECO.

16. SCHEDULE

    CONTRACTOR SHALL FURNISH HIS CONSTRUCTION SCHEDULE __ WORKING DAYS PRIOR TO STARTING WORK ON HECO FACILITIES. CONTRACTOR SHALL GIVE HECO, IN WRITING __ WORKING DAYS NOTICE TO PROCEED WITH HECO'S PORTION OF WORK.

17. AUTHORITY

    ALL CONSTRUCTION, RESTORATION WORK, AND INSPECTION SHALL BE SUBJECT TO WHICHEVER GOVERNMENTAL AGENCY HAS AUTHORITY OVER THE WORK.

18. SPECIFICATIONS

    CONSTRUCTION OF HECO'S UNDERGROUND FACILITIES SHALL BE CONSTRUCTED IN ACCORDANCE WITH THE LATEST REVISIONS OF HECO SPECIFICATIONS CS7001, CS7003, CS7202, CS9301, AND CS9401 AND APPLICABLE HECO STANDARDS.

19. CONSTRUCTION

    CONTRACTOR SHALL FURNISH ALL LABOR, MATERIALS, EQUIPMENT, AND SERVICES TO PROPERLY PERFORM AND FULLY COMPLETE ALL WORK SHOWN ON THE CONTRACT, DRAWINGS, AND SPECIFICATIONS. ALL MATERIALS SHALL BE NEW AND MANUFACTURED IN THE UNITED STATES OF AMERICA. ALL MANHOLE, HANDHOLE, AND DUCTLINE INSTALLATIONS SHALL BE INSPECTED AND APPROVED BY HECO PRIOR TO EXCAVATION AND PRIOR TO PLACING CONCRETE. CONTRACTOR SHALL NOTIFY HECO'S INSPECTION DIVISION AT 543-4356 AT LEAST 48 HOURS PRIOR TO PLACING CONCRETE.

    CONTRACTOR TO COORDINATE WORK TO BREAK INTO HECO'S EXISTING ELECTRICAL FACILITIES WITH HECO'S UNDERGROUND DIVISION AT 543-7871 AT LEAST 10 WORKING DAYS IN ADVANCE.

20. STAKEOUT

    THE CONTRACTOR SHALL ARRANGE FOR TONEOUTS OF ALL UNDERGROUND FACILITIES AND SHALL STAKEOUT ALL PROPOSED HECO FACILITIES WITHIN THE PROJECT AREA SO AS TO NOT CONFLICT WITH ANY UTILITY (EXISTING OR PROPOSED) AND ANY PROPOSED CONSTRUCTION OR IMPROVEMENT WORK FOR VERIFICATION BY HECO BEFORE PROCEEDING WITH HECO WORK.

21. DUCTLINES

    ALL DUCTLINE INSTALLATIONS SHALL BE PVC SCHEDULE 40 ENCASED IN CONCRETE, UNLESS OTHERWISE NOTED. ALL COMPLETED DUCTLINES SHALL BE MANDREL TESTED BY THE CONTRACTOR IN THE PRESENCE OF HECO'S INSPECTOR USING HECO'S STANDARD PRACTICE. THE CONTRACTOR SHALL INSTALL A 1/8" POLYOLEFIN PULL LINE IN ALL COMPLETED DUCTLINES AFTER MANDREL TESTING IS COMPLETE.

22. JOINT POLE REMOVAL

    THE LAST JOINT POLE OCCUPANT OFF THE POLES SHALL REMOVE THE POLES.

23. AS-BUILT PLANS

    THE CONTRACTOR SHALL PROVIDE HECO WITH TWO SETS OF AS-BUILT REPRODUCIBLE TRACINGS SHOWING THE OFFSETS, STATIONING, AND VERTICAL ELEVATION OF THE DUCT LINE(S) CONSTRUCTED.

DRAWING REVIEW

Reviewed for HECO's Facilities Only

Date 12/13/12 By [signature]

Customer Installation Department
Hawaiian Electric Company, Inc.

HECO's review of these drawings shall in no way relieve the Customer, its Consultant, its Contractor or anyone acting on the Customer's behalf from the responsibility for engineering, design, materials and any other liability associated with this project.

GARY I. FUNASAKI
LICENSED PROFESSIONAL ENGINEER
No. 4195-E
HAWAII, U.S.A.
13 NOV 2012

THIS WORK WAS PREPARED BY ME OR UNDER MY SUPERVISION. CONSTRUCTION OF THIS PROJECT WILL BE UNDER MY OBSERVATION.
LICENSE EXPIRATION DATE: 04/30/14

REVISION DATE	DESCRIPTION	MADE BY	APPROVED

cp&e **Community Planning and Engineering, Inc.**
Engineering Design | Construction Management | Infrastructure Planning
1100 Alakea Street, Sixth Floor Honolulu, Hawaii

EAST KAPOLEI II DEVELOPMENT INCREMENT 2B

HONOULIULI, EWA, OAHU, HAWAII
(DPP SUBD. FILE NO. 2011/SUB-155
OWNER & DEVELOPER: DEPARTMENT OF HAWAIIAN HOME LANDS
TAX MAP KEY: 9-1-17: Portion 110

HECO NOTES

DRAWN BY: CAD | ENGINEER: GF | CHECKED BY: GF

APPROVED:

HAWAIIAN ELECTRIC CO. DATE DATE

DATE DATE

DWG. NO. **E-3** SHEET 43 OF 78 SHEETS

FILE	POCKET	FOLDER	NO.

LAST SAVE: 09/06/12 @ 10:54:39 BY: RN PLOT SC 1'-0"=1'
Z:\ACAD\PROJECTS\29084F\E03_211068_Note01

SANDWICH ISLES COMMUNICATIONS' NOTES
September 14, 2011

GENERAL:

ALL WORK SHALL BE IN STRICT ACCORDANCE WITH SPECIFICATIONS AND REQUIREMENTS OF THE RURAL UTILITIES SERVICES (RUS) AND SANDWICH ISLES COMMUNICATIONS (SIC), WHICH COMPLIES WITH ALL APPLICABLE CITY, COUNTY, STATE AND FEDERAL REQUIREMENTS.

ALL MATERIALS USED MUST BE APPROVED AND (OR) ACCEPTED BY SANDWICH ISLES COMMUNICATIONS, INC..

CONTRACTOR MAY REFER TO THE RUS WEBSITE (HTTP://WWW.RURDEV.USDA.GOV/RUSTELECOMPROGRAMS.HTML) FOR REGULATIONS, BULLETINS, FORMS, ETC.

CONTACT THE HAWAII ONE CALL CENTER AT (866) 423-7287 FOR LOCATING EXISTING UNDERGROUND FACILITIES PRIOR TO BEGINNING ANY EXCAVATION.

ALL WORK SHALL BE COORDINATED AND SCHEDULED WITH SIC AND/OR IT'S REPRESENTATIVE AND ANY OTHER AGENCY INVOLVED WITH THE PROJECT.

THE CONTRACTOR SHALL PROCURE AND PAY FOR ALL LICENSES AND PERMITS AND SHALL GIVE ALL NOTICES NECESSARY FOR PROSECUTION OF THE WORK.

CONDUITS:

1. ALL PVC CONDUITS, SWEEPS, COUPLINGS, ADAPTERS AND BELL ENDS SHALL BE SCHEDULE 40, UNLESS OTHERWISE SPECIFIED.

2. ALL HIGH DENSITY POLYETHYLENE CONDUITS SHALL BE SDR 11. TYPICAL 4-PACK UNIT INCLUDES FOUR 1-1/2" SDR 11 RATED CONDUITS IN THE COLORS OF BLACK, RED, ORANGE, AND WHITE, UNLESS OTHERWISE SPECIFIED. ALL CONDUITS TO BE PRESSURE TESTED AT 120 PSI. FUSION SPLICING OF THE CONDUIT SHALL BE ACCEPTABLE ONLY WHEN PULLING JOINTS THROUGH BORES. ALL COUPLINGS SHALL BE DOUBLE "E-LOC" MANUFACTURED BY ETOC SPECIALTY PRODUCTS, INC.

3. MAIN CONDUIT RUNS, EXCEPT RISER CONDUITS, SHALL BE CONSTRUCTED WITH MINIMUM 6-FOOT RADIUS CURVES, UNLESS OTHERWISE APPROVED BY THE ENGINEER.

4. AFTER THE CONDUITS ARE INSTALLED, A ROUND SOLID MANDREL NOT LESS THAN 12" IN LENGTH AND HAVING A DIAMETER OF ∞" LESS THAN THE INSIDE DIAMETER OF THE CONDUIT SHALL BE PULLED THROUGH EACH CONDUIT. SUFFIXES LISTED IN RUS 515B FOR CONDUITS ARE APPLICABLE.

5. INSTALL MULETAPE IN ALL PVC CONDUITS AND CAP ALL CONDUITS AFTER TESTING. THE NEPTCO (OR APPROVED EQUAL) MULETAPE IS AVAILABLE IN 3,000FT., 6,500FT., AND 10,000FT. REELS FROM WESTINGHOUSE ELECTRIC SUPPLY COMPANY (WESCO), THE NEPTCO MULETAPE IS PRE-LUBRICATED AND PRINTED WITH SEQUENTIAL FOOTAGE MARKINGS. MULETAPE WILL NOT BE INSTALLED IN CONDUITS DESIGNATED FOR FIBER.

6. ALL 4" DUCTS SHALL HAVE WATERTIGHT PLUGS TO KEEP THEM FREE OF MOISTURE & DEBRIS AND TO ACCOMMODATE CABLING PLACED ON FUTURE PROJECTS.
   4" PLUGS SHALL CONSIST OF:
   TYCO, QUADPLEX JACKMOON PLUGS, SERIES 136
   TYCO, JACKMOON HOLE PLUGS & BUSHINGS, SERIES 136
   ALL OTHER DUCTS SHALL HAVE TYCO, BLANK JACKMOON PLUGS TO KEEP THEM FREE OF WATER AND DEBRIS.

7. CONDUIT STUBS FROM HANDHOLES TO INDIVIDUAL RESIDENTIAL LOTS SHALL BE SCHEDULE 40 PVC, 1" DIAMETER AND EXTENDED 5' BEYOND PROPERTY LINE. CAP AND SEAL END AND MARK LOCATIONS WITH ABOVE GROUND MARKER.

8. ALL CONDUITS SHALL ENTER MANHOLES AT A 90 DEGREE ANGLE AND SHALL EXTEND INTO THE MANHOLE AS FOLLOWS: CONDUITS DESIGNATED FOR FIBER SHALL EXTEND 12" INTO THE MANHOLE. ALL OTHER CONDUITS SHALL BE FLUSH WITH THE INSIDE WALL AND INCLUDE BELL ENDS. ANY EXCEPTIONS SHALL ONLY BE PERMITTED WHEN SPECIFIED BY THE ENGINEER.

9. ALL CONDUITS ENTERING MANHOLES OR HANDHOLES SHALL BE GROUTED BETWEEN THE CONDUITS AND SIDEWALL, INSIDE AND OUT. ALL CONDUITS WILL ENTER THE MANHOLES AND HANDHOLES ON THE PROPERTY SIDE AT ALL TIMES UNLESS OTHERWISE SPECIFIED BY THE ENGINEER.

10. BACKFILL AND COMPACTION FOR DUCTLINE TRENCHES, MANHOLES AND HANDHOLES , SHALL BE IN ACCORDANCE WITH:

   A. STATE HIGHWAY DEPARTMENT'S STANDARD SPECIFICATIONS FOR ROAD AND BRIDGE CONSTRUCTION WITH LATEST AMENDMENTS, IF CONSTRUCTION IS LOCATED UNDER A STATE STREET OR ROAD, OR LOCATED IN PRIVATE PROPERTY.

   B. THE STANDARD SPECIFICATIONS FOR ROAD, BRIDGE AND PUBLIC WORKS CONSTRUCTION, DATED 1986, OF THE DEPARTMENT OF PUBLIC WORKS, CITY AND COUNTY OF HONOLULU, WITH LATEST AMENDMENTS; COUNTY OF KAUAI, MAUI, OR HAWAII, AS THE CASE MAY BE, IF CONSTRUCTION IS LOCATED UNDER COUNTY STREETS AND ROADS

11. BACKFILLING SHALL BE SUBJECT TO THE APPROVAL OF THE SIC INSPECTOR, THE AUTHORIZED REPRESENTATIVE OF THE DEPARTMENT OF TRANSPORTATION, STATE OF HAWAII AND/OR DEPARTMENT OF PUBLIC WORKS, CITY AND COUNTY OF HONOLULU, COUNTY OF KAUAI, MAUI OR HAWAII, AS THE CASE MAY BE.

12. A THIRD PARTY GEOTECHNICAL ENGINEER, LICENSED AND INSURED IN THE STATE OF HAWAII, MUST CERTIFY THAT THE EXCAVATED AREA MEETS THE GOVERNING AGENCIES AND/OR OWNERS STANDARDS FOR BACKFILL AND COMPACTION.

13. EXCAVATED MATERIAL MAY BE REUSED AS BACKFILL, PROVIDING THAT IT CONFORMS TO REQUIREMENTS OF TYPE "A" AND TYPE "B" BACKFILL, AS REQUIRED WITHIN THE STANDARD SPECIFICATIONS. A WRITTEN SOILS REPORT OF CONFORMANCE BY A LICENSED THIRD PARTY GEOTECHNICAL ENGINEER IS NEEDED PRIOR TO BACKFILL USING THE EXCAVATED MATERIAL.

   A. TYPE A BACKFILL IS DEFINED AS BEACH SAND, EARTH OR EARTH AND GRAVEL. MAXIMUM PARTICLE SIZE SHALL BE 1" AND MIXTURE SHALL NOT CONTAIN MORE THAN 20 % BY VOLUME OF ROCK PARTICLES.

   B. TYPE B BACKFILL IS DEFINED AS BEACH SAND, EARTH OR EARTH AND GRAVEL. MAXIMUM PARTICLE SIZE SHALL BE 1/2" AND MIXTURE SHALL NOT CONTAIN MORE THAN 20 % BY VOLUME OF ROCK PARTICLES.

14. ALL CONDUIT RUNS SHALL HAVE A 3" NON-METALLIC WARNING TAPE PLACED 12 INCHES ABOVE THE CONDUIT RUN. THE TAPE SHALL READ "CAUTION BURIED FIBER OPTIC CABLE BELOW".

MANHOLES AND HANDHOLES:

1. ALL MANHOLES SHALL HAVE HS20-44 TRAFFIC LOADING COVERS (UNLESS OTHERWISE NOTED). HANDHOLES SHALL HAVE 20K TRAFFIC LOAD RATED COVERS.

2. ALL MANHOLE AND HANDHOLE COVERS SHALL HAVE COVER LOGO TO READ "SIC".

3. ALL MANHOLE AND HANDHOLE COVER BOLTS SHALL BE STAINLESS STEEL 0" PENTAHEAD, UNLESS OTHERWISE NOTED.

4. ALL MANHOLES AND HANDHOLES ARE SPECIFIED AS FOLLOWS:

   A. UM35 AND UM4X6 MANHOLE ASSEMBLY UNITS – HAWAII PRECAST, INC. AS PER MASTER PURCHASE AGREEMENT.

   B. UHC30X48X33 HANDHOLE (PULLBOX) ASSEMBLY UNIT. THIS UNIT SHALL CONSIST OF ONE TWO TIER ARMORCAST POLYMER CONCRETE BOX & COVER ASSEMBLY. PART NUMBER (A6001430TA-SIC4) OR EQUIVALENT.

   C. UHC13X24X36 HANDHOLE (PULLBOX) ASSEMBLY UNIT. THIS UNIT SHALL CONSIST OF ONE ARMORCAST POLYMER CONCRETE BOX & COVER ASSEMBLY. PART NUMBER (A6001946TA-SIC2) OR EQUIVALENT.

   D. UH35 AND UH4X6 HANDHOLE ASSEMBLY UNITS – HAWAII PRECAST, INC. AS PER MASTER PURCHASE AGREEMENT.

5. ALL MANHOLES AND HANDHOLES TO BE ORDERED WITH ALL HARDWARE, INCLUDING CABLE RACKS, STEPS AND LOCKS.

6. SET MANHOLE OR HANDHOLE ON A LEVEL AREA, IN THE BOTTOM OF THE EXCAVATION, ON A 4" LAYER OF CRUSHED ROCK, FOR DRAINAGE PURPOSES.

7. THE BASE OF ALL MANHOLES AND HANDHOLES WILL BE PLACED LEVEL. SOME MANHOLES HAVE ADJUSTABLE FRAMES. ALL VOIDS CREATED DURING INSTALLATION MUST BE FILLED WITH MORTAR MIX OR CONCRETE. THIS IS ESPECIALLY TRUE FOR MANHOLES AND HANDHOLES SET IN ROADWAYS.

8. BEFORE BACKFILLING AND COMPACTING, MAKE SURE COVERS ARE IN PLACE AND SECURE. LAYER 6" TO 8" OF BACKFILL MATERIAL AROUND THE MANHOLE OR HANDHOLE. TAMP EACH INDIVIDUAL LAYER OF BACKFILL MATERIAL. CONTINUE THE LAYERING AND "TAMPING" UNTIL FINAL GRADE IS ACHIEVED.

9. THE TOPS OF ALL MANHOLES AND HANDHOLES SHALL BE FLUSH TO GRADE IN PAVED AREAS OR 1" ABOVE FINISH GRADE IN NON-PAVED AREAS, UNLESS OTHERWISE SPECIFIED BY ENGINEER.

10. PROVIDE A 5/8-INCH DIAMETER X 8 FT. COPPER CLAD GROUND ROD AT HANDHOLES AND MANHOLES, AS SPECIFIED ON THE DRAWINGS OR AS DIRECTED BY THE PROJECT MANAGER.

OCEANIC TIME WARNER CABLE NOTES

1. THE LOCATION OF CATV FACILITIES ARE BASICALLY WITHIN EXISTING CATV CONDUITS. THE CONTRACTOR SHALL USE EXTREME CAUTION WHEN WORKING IN CLOSE PROXIMITY OF CATV FACILITIES.

2. THE CONTRACTOR SHALL OBTAIN EXCAVATION PERMIT CLEARANCE FROM OCEANIC TIME WARNER CABLE'S ENGINEERING SECTION LOCATED AT 200 AKAMAINUI ST., MILILANI TECH. PARK. PHONE 625-8443.

3. ANY WORK REQUIRED TO RELOCATE CATV FACILITIES SHALL BE DONE BY OCEANIC TIME WARNER CABLE AND THE CONTRACTOR SHALL BE RESPONSIBLE FOR ALL COORDINATION REQUIREMENTS AND ASSOCIATED APPLICABLE COSTS.

4. ANY DAMAGE TO CATV FACILITIES SHALL BE REPORTED IMMEDIATELY TO OCEANIC TIME WARNER CABLE'S REPAIR DISPATCH DEPARTMENT AT 625-8437.

5. CONTACT OCEANIC TIME WARNER CABLE INSPECTOR 72 HOURS PRIOR TO STARTING WORK ON CATV INFRASTRUCTURE. CALL MOKI PLACE AT 306-0658.

6. ALL CONDUITS SHALL ENTER THROUGH THE END OF THE PULLBOX AT 90 DEGREES TO THE WALL OF PULLBOX.

7. ALL ENTRANCES INTO THE PULLBOX SHALL BE GROUTED AROUND THE CONDUITS AND THE INSIDE SURFACES SHALL BE SMOOTH AND FLUSH WITH THE EXISTING WALL.

8. ALL 4" CONDUITS SHALL HAVE MULETAPE AND ALL OTHER SIZE CONDUITS SHALL HAVE PULLSTRING.

9. END BELS ARE REQUIRED ON ALL 4" AND 2" CONDUITS.

10. AFTER DUCTLINE HAS BEEN COMPLETED, A MANDREL NOT LESS THAN 12" LONG AND HAVING A DIAMETER OF 1/4" LESS THAN THE INSIDE DIAMETER OF DUCT SHALL BE PULLED THROUGH EACH DUCT.

HAWAIIAN ELECTRIC COMPANY NOTES

1. ALL HECO PRIMARY DUCTS SHALL BYPASS ALL HECO PULLBOXES 2' X 4' AND SMALLER.

2. 2" DUCTS FOR HECO SINGLE PHASE PRIMARY SHOULD BYPASS HECO MH'S USED FOR MAINS, WHEN FEASIBLE.

3. IF HECO EQUIPMENT IS LOCATED NEAR SLOPING TERRAIN, THE CONTRACTOR MAY BE REQUIRED TO CONSTRUCT RETAINING WALLS PER HECO STANDARD NO. 30-5002.

DRAWING REVIEW

Reviewed for HECO's Facilities Only

Date 12/19/12 By

Customer Installation Department
Hawaiian Electric Company, Inc.

HECO's review of these drawings shall in no way relieve the Customer, its Consultant, its Contractor or anyone acting on the Customer's behalf from the responsibility for engineering, design, materials and any other liability associated with this project.

GARY I. FUNASAKA
LICENSED PROFESSIONAL ENGINEER
No. 4185-E
HAWAII, U.S.A.
13 NOV 2012

THIS WORK WAS PREPARED BY ME OR UNDER MY SUPERVISION. CONSTRUCTION OF THIS PROJECT WILL BE UNDER MY OBSERVATION. LICENSE EXPIRATION DATE: 04/30/14

REVISION DATE	DESCRIPTION	MADE BY	APPROVED

cp&e Community Planning and Engineering, Inc.
Engineering Design | Construction Management | Infrastructure Planning
1100 Alakea Street, Sixth Floor Honolulu, Hawaii

EAST KAPOLEI II DEVELOPMENT INCREMENT 2B

HONOULIULI, EWA, OAHU, HAWAII
(DPP SUBD. FILE NO. 2011/SUB-155
OWNER & DEVELOPER: DEPARTMENT OF HAWAIIAN HOME LANDS
TAX MAP KEY: 9-1-17: Portion 110

HECO, SIC & OCEANIC NOTES

DRAWN BY: CAD	ENGINEER: GF	CHECKED BY: GF

APPROVED:

HAWAIIAN ELECTRIC CO. DATE

SANDWICH ISLES COMMUNICATIONS, INC. 12/19/12 DATE

DATE

FILE	POCKET	FOLDER	NO.

DWG. NO. E-4 SHEET 44 OF 78 SHEETS

LAST SAVE: 09/09/12 @ 10:55:04 BY: RN PLOT SC: 1"0"=1"
Z:\ACAD\PROJECTS\2908#\EDA_2908#_SIC-Notes1

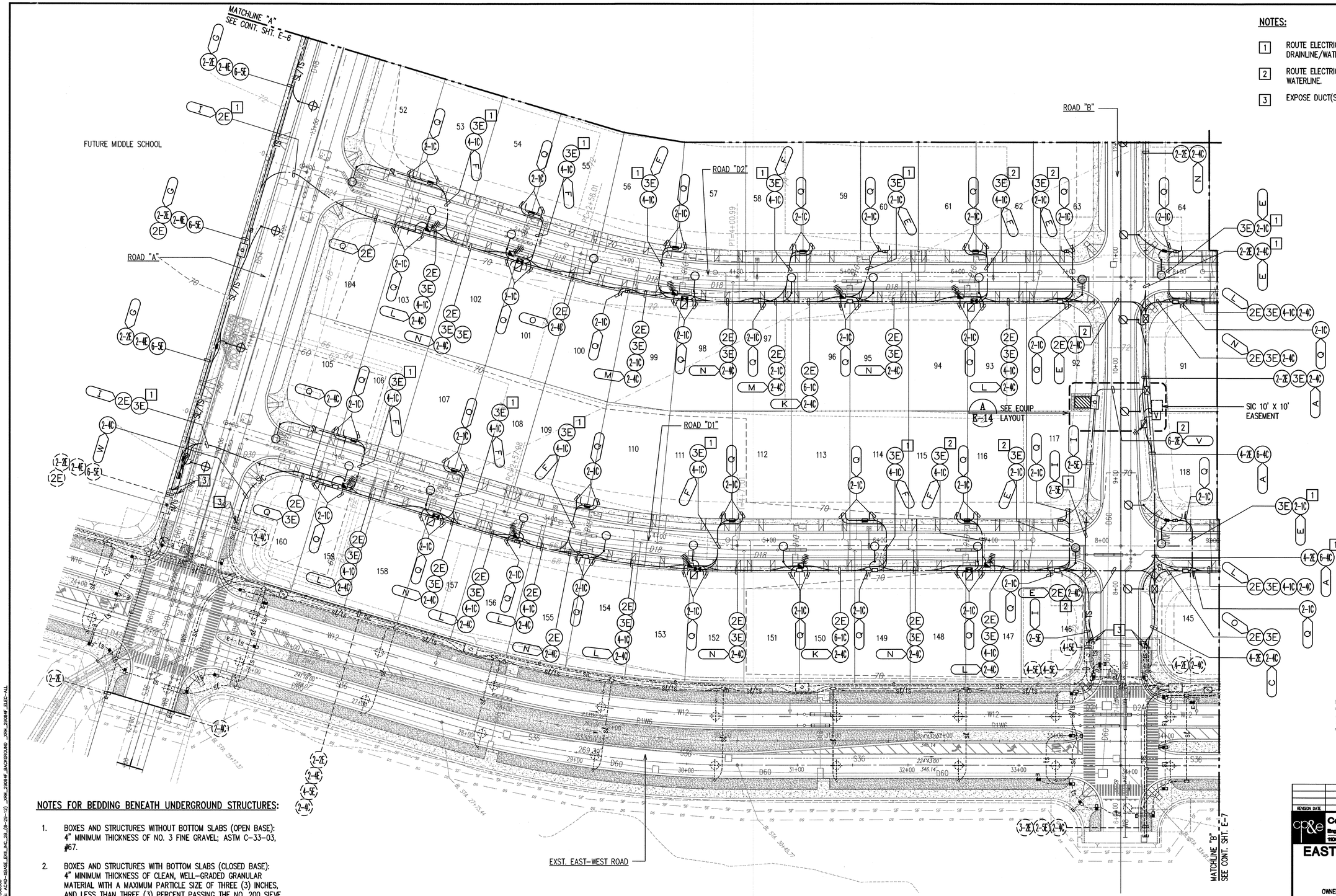

NOTES:

1. ROUTE ELECTRIC/COMMUNICATION DUCTLINE BELOW DRAINLINE/WATERLINE.
2. ROUTE ELECTRIC/COMMUNICATION DUCTLINE BELOW WATERLINE.
3. EXPOSE DUCT(S), PROVIDE COUPLING(S) AND EXTEND.

NOTES FOR BEDDING BENEATH UNDERGROUND STRUCTURES:

1. BOXES AND STRUCTURES WITHOUT BOTTOM SLABS (OPEN BASE): 4" MINIMUM THICKNESS OF NO. 3 FINE GRAVEL; ASTM C-33-03, #67.
2. BOXES AND STRUCTURES WITH BOTTOM SLABS (CLOSED BASE): 4" MINIMUM THICKNESS OF CLEAN, WELL-GRADED GRANULAR MATERIAL WITH A MAXIMUM PARTICLE SIZE OF THREE (3) INCHES, AND LESS THAN THREE (3) PERCENT PASSING THE NO. 200 SIEVE OR SELECT BORROW.
3. PROVIDED BEDDING BENEATH MANHOLES, HANDHOLES AND PULLBOXES IN RELATIVELY UNIFORM LIFTS NO GREATER THAN SIX (6) INCHES IN LOOSE THICKNESS, MOISTURE CONDITIONED TO WITHIN THREE (3) PERCENT OF THEIR OPTIMUM MOISTURE CONTENT, AND UNIFORMLY COMPACTED TO AT LEAST NINETY (90) PERCENT OF THE MAXIMUM DRY DENSITY (ASTM D1557-02). CONTRACTOR TO SCHEDULE WITH CITY INSPECTORS FOR COMPACTION AND BEDDING INSTALLATION.

NORTH

ELECTRICAL DISTRIBUTION PARTIAL PLAN I

SCALE: 1"=40'

APPROVED BY:

M. [signature] 6/28/13

CHIEF, CIVIL ENGINEERING BRANCH
DEPT. OF PLANNING AND PERMITTING

DATE

40' 20' 0 40' 80' 120'

SCALE: 1"=40'

GRAPHIC SCALE

GARY I. FUNASAKA
LICENSED PROFESSIONAL ENGINEER
No. 4195-E
HAWAII, U.S.A.
13 Nov 2012

THIS WORK WAS PREPARED BY ME, OR UNDER MY SUPERVISION. CONSTRUCTION OF THIS PROJECT WILL BE UNDER MY OBSERVATION. LICENSE EXPIRATION DATE: 04/30/14

DRAWING REVIEW

Reviewed for HECO's Facilities Only

Date 12/13/12 By [signature]

Customer Installation Department
Hawaiian Electric Company, Inc.

HECO's review of these drawings shall in no way relieve the Customer, its Consultant, its Contractor or anyone acting on the Customer's behalf from the responsibility for engineering, design, materials and any other liability associated with this project.

REVISION DATE	DESCRIPTION	MADE BY	APPROVED

Community Planning and Engineering, Inc.
Engineering Design | Construction Management | Infrastructure Planning
1100 Alakea Street, Sixth Floor Honolulu, Hawaii

EAST KAPOLEI II DEVELOPMENT INCREMENT 2B

HONOULIULI, EWA, OAHU, HAWAII
(DPP SUBD. FILE NO. 2011/SUB-155
OWNER & DEVELOPER: DEPARTMENT OF HAWAIIAN HOME LANDS
TAX MAP KEY: 9-1-17: Portion 110

ELECTRICAL DISTRIBUTION PARTIAL PLAN I

DRAWN BY: CAD	ENGINEER: GF	CHECKED BY: GF

APPROVED:

HAWAIIAN ELECTRIC CO. DATE

CHIEF, TRAFFIC REVIEW BRANCH, D.P.P. DATE 6/18/13

SANDWICH ISLES COMMUNICATIONS, INC. DATE 12/19/12

DWG. NO. E-5

SHEET 45 OF 78 SHEETS

FILE	POCKET	FOLDER	NO.

LAST SAVE: 09/06/12 @ 10:55:29 BY: RN PLOT SC 1=40.000000
Z:\ACAD\PROJECTS\2908F\E05_2908F_DistPlan01 XREFS: ACAD-XBASE_EKI_INC_2B_(8-29-12) XRH_2908F_BACKGROUND XRH_2908F_ELEC-ALL

NOTES:

1. ROUTE ELECTRIC/COMMUNICATION DUCTLINE BELOW DRAINLINE/WATERLINE.
2. ROUTE ELECTRIC/COMMUNICATION DUCTLINE BELOW WATERLINE.
3. EXPOSE DUCT(S), PROVIDE COUPLING(S) AND EXTEND.

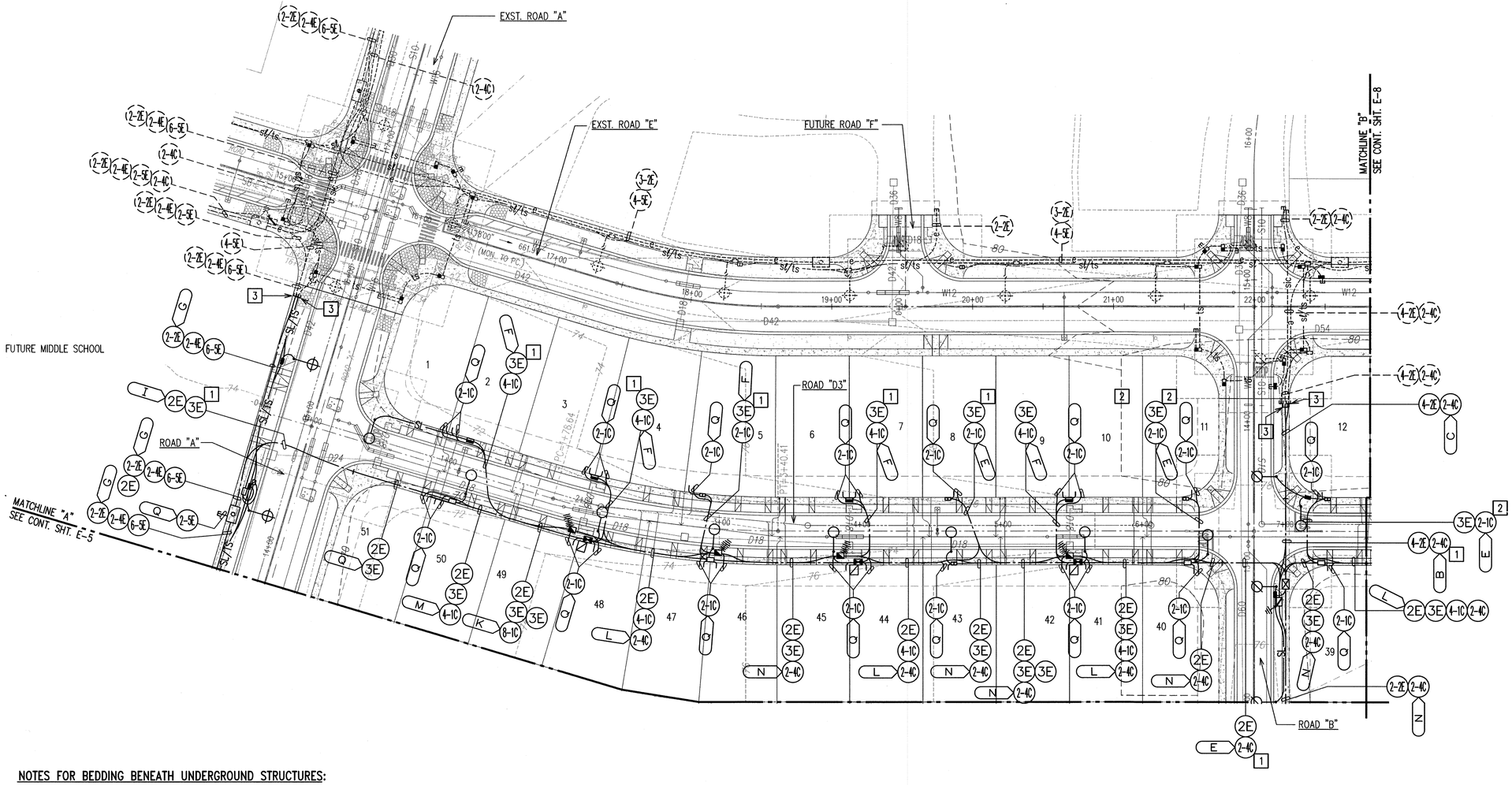
EXST. ROAD "A"
EXST. ROAD "E"
FUTURE ROAD "F"
ROAD "D3"
ROAD "A"
ROAD "B"
FUTURE MIDDLE SCHOOL
MATCHLINE "A" SEE CONT. SHT. E-5
MATCHLINE "B" SEE CONT. SHT. E-8
(2-2E)(2-4E)(6-5E)
(2-4C)
(3-2E)(4-5E)
(4-2E)(2-4C)
(2-2E)(2-4C)
(4-5E)
(2-5E)
(2-4E)(2-4C)
(2-2E)(4-4C)
(2-2E)(4-1C)(2-4C)
(4-2E)(4-4C)
(3E)(2-1C)
(2E)(3E)(4-1C)(2-4C)
(2E)(3E)(2-1C)
(2E)(2-1C)
(2-2E)(2-4C)
(2-2E)(2-4E)(6-5E)
(2-2E)(2-4C)
(2-2E)(2-4E)(2-5E)
(2-2E)(2-4C)
(2-2E)(2-4E)(2-5E)
(2-2E)(2-4E)(6-5E)
(2-2E)(2-4C

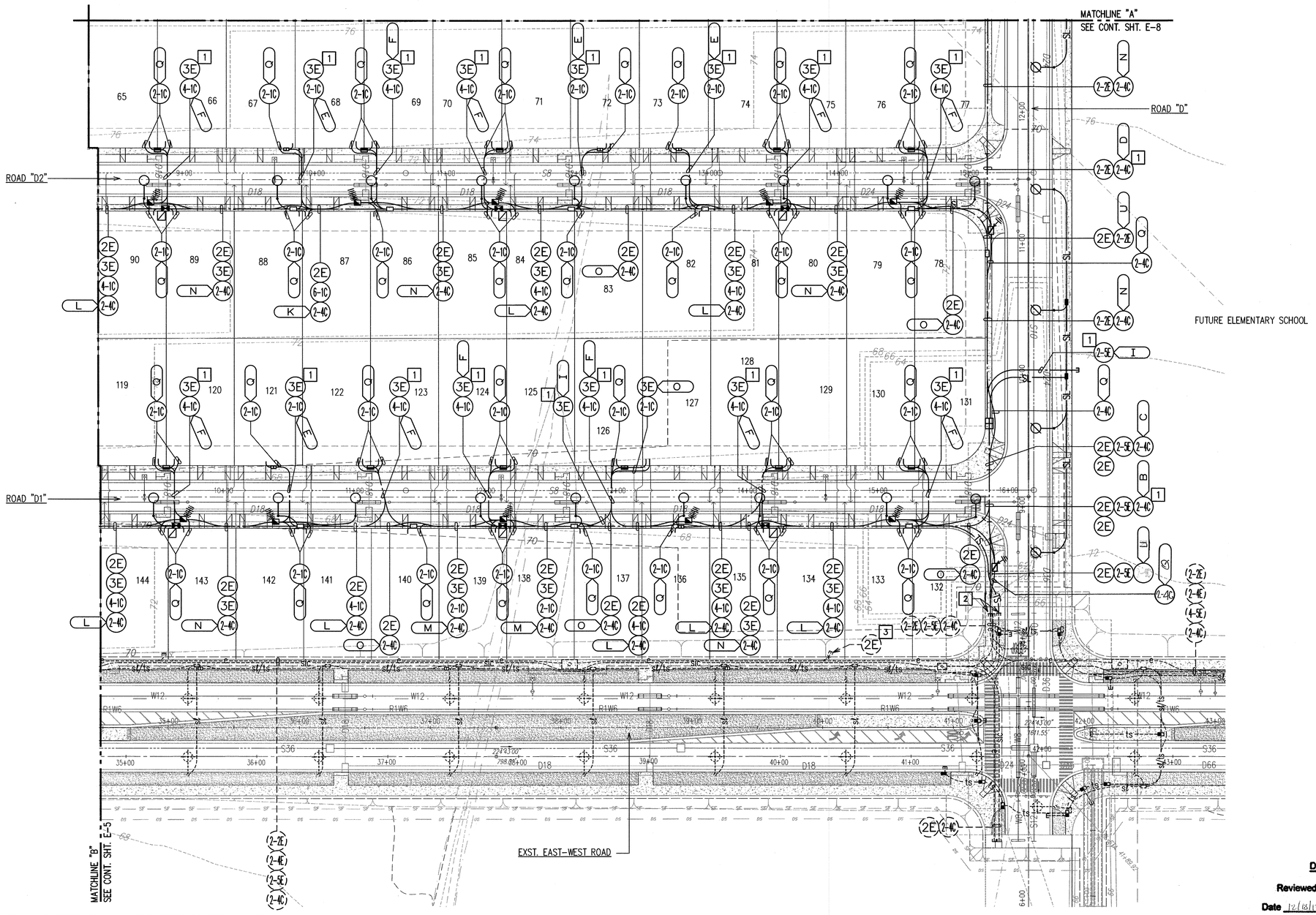

NOTES:

1. ROUTE ELECTRIC/COMMUNICATION DUCTLINE BELOW DRAINLINE/WATERLINE.
2. EXPOSE DUCT(S), PROVIDE COUPLING(S) AND EXTEND.
3. EXPOSE DUCT, CUT & CAP AT RIGHT-OF-WAY LINE AND ABANDON DUCT IN PLACE.

NOTES FOR BEDDING BENEATH UNDERGROUND STRUCTURES:

1. BOXES AND STRUCTURES WITHOUT BOTTOM SLABS (OPEN BASE): 4" MINIMUM THICKNESS OF NO. 3 FINE GRAVEL; ASTM C-33-03, #67.
2. BOXES AND STRUCTURES WITH BOTTOM SLABS (CLOSED BASE): 4" MINIMUM THICKNESS OF CLEAN, WELL-GRADED GRANULAR MATERIAL WITH A MAXIMUM PARTICLE SIZE OF THREE (3) INCHES, AND LESS THAN THREE (3) PERCENT PASSING THE NO. 200 SIEVE OR SELECT BORROW.
3. PROVIDED BEDDING BENEATH MANHOLES, HANDHOLES AND PULLBOXES IN RELATIVELY UNIFORM LIFTS NO GREATER THAN SIX (6) INCHES IN LOOSE THICKNESS, MOISTURE CONDITIONED TO WITHIN THREE (3) PERCENT OF THEIR OPTIMUM MOISTURE CONTENT, AND UNIFORMLY COMPACTED TO AT LEAST NINETY (90) PERCENT OF THE MAXIMUM DRY DENSITY (ASTM D1557-02). CONTRACTOR TO SCHEDULE WITH CITY INSPECTORS FOR COMPACTION AND BEDDING INSTALLATION.

NORTH

ELECTRICAL DISTRIBUTION PARTIAL PLAN III

SCALE: 1"=40'

DRAWING REVIEW

Reviewed for HECO's Facilities Only

Date 12/18/12 By [signature]

Customer Installation Department
Hawaiian Electric Company, Inc.

HECO's review of these drawings shall in no way relieve the Customer, its Consultant, its Contractor or anyone acting on the Customer's behalf from the responsibility for engineering, design, materials and any other liability associated with this project.

APPROVED BY:

M. [signature] 6/28/13

CHIEF, CIVIL ENGINEERING BRANCH MT DATE
DEPT. OF PLANNING AND PERMITTING

40' 20' 0 40' 80' 120'

SCALE: 1"=40'

GRAPHIC SCALE

GARY I. FUNASAKI
LICENSED PROFESSIONAL ENGINEER
No. 4195-E
HAWAII, U.S.A.

13 Nov 2012

THIS WORK WAS PREPARED BY ME OR UNDER MY SUPERVISION. CONSTRUCTION OF THIS PROJECT WILL BE UNDER MY OBSERVATION. LICENSE EXPIRATION DATE: 04/30/14

REVISION DATE	DESCRIPTION	MADE BY	APPROVED

Community Planning and Engineering, Inc.
Engineering Design | Construction Management | Infrastructure Planning
1100 Alakea Street, Sixth Floor Honolulu, Hawaii

EAST KAPOLEI II DEVELOPMENT INCREMENT 2B

HONOULIULI, EWA, OAHU, HAWAII
(DPP SUBD. FILE NO. 2011/SUB-155
OWNER & DEVELOPER: DEPARTMENT OF HAWAIIAN HOME LANDS
TAX MAP KEY: 9-1-17: Portion 110

ELECTRICAL DISTRIBUTION PARTIAL PLAN III

DRAWN BY: CAD | ENGINEER: GF | CHECKED BY: GF

APPROVED:

HAWAIIAN ELECTRIC CO. DATE

CHIEF, TRAFFIC REVIEW BRANCH, D.P.P. 6/13/13 DATE

[signature] 12/19/12
SANDWICH ISLES COMMUNICATIONS, INC. DATE

DATE

DWG. NO. E-7 SHEET 47 OF 78 SHEETS

FILE	POCKET	FOLDER	NO.

LAST SAVE: 09/06/12 @ 10:56:18 BY: RN PLOT SC 1=40.000000
Z:\ACAD\PROJECTS\29084F\E07_29084F_DistPlan03 XREFS: ACAD-XBASE_EXII_INC_2B_(8-29-12) _XRH_29084F_BACKGROUND _XRH_29084F_ELEC-ALL

NOTES:

1. ROUTE ELECTRIC/COMMUNICATION DUCTLINE BELOW DRAINLINE/WATERLINE.
2. EXPOSE DUCT(S), PROVIDE COUPLING(S) AND EXTEND.

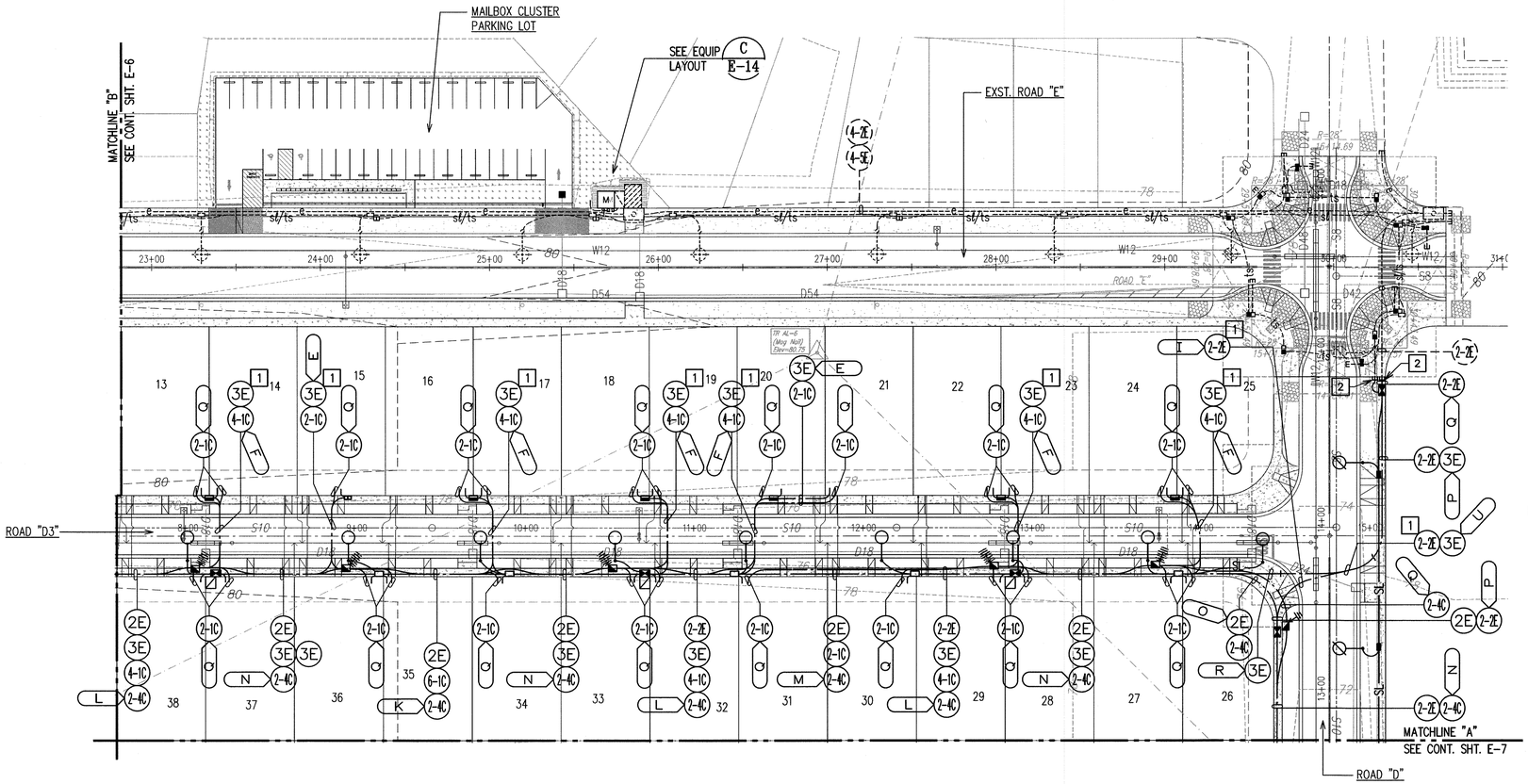

NOTES FOR BEDDING BENEATH UNDERGROUND STRUCTURES:

1. BOXES AND STRUCTURES WITHOUT BOTTOM SLABS (OPEN BASE): 4" MINIMUM THICKNESS OF NO. 3 FINE GRAVEL; ASTM C-33-03, #67.
2. BOXES AND STRUCTURES WITH BOTTOM SLABS (CLOSED BASE): 4" MINIMUM THICKNESS OF CLEAN, WELL-GRADED GRANULAR MATERIAL WITH A MAXIMUM PARTICLE SIZE OF THREE (3) INCHES, AND LESS THAN THREE (3) PERCENT PASSING THE NO. 200 SIEVE OR SELECT BORROW.
3. PROVIDED BEDDING BENEATH MANHOLES, HANDHOLES AND PULLBOXES IN RELATIVELY UNIFORM LIFTS NO GREATER THAN SIX (6) INCHES IN LOOSE THICKNESS, MOISTURE CONDITIONED TO WITHIN THREE (3) PERCENT OF THEIR OPTIMUM MOISTURE CONTENT, AND UNIFORMLY COMPACTED TO AT LEAST NINETY (90) PERCENT OF THE MAXIMUM DRY DENSITY (ASTM D1557-02). CONTRACTOR TO SCHEDULE WITH CITY INSPECTORS FOR COMPACTION AND BEDDING INSTALLATION.

NORTH

ELECTRICAL DISTRIBUTION PARTIAL PLAN IV

SCALE: 1"=40'

DRAWING REVIEW

Reviewed for HECO's Facilities Only

Date 12/13/12 By [signature]

Customer Installation Department
Hawaiian Electric Company, Inc.

HECO's review of these drawings shall in no way relieve the Customer, its Consultant, its Contractor or anyone acting on the Customer's behalf from the responsibility for engineering, design, materials and any other liability associated with this project.

APPROVED BY:

M. [signature] 6/28/13

CHIEF, CIVIL ENGINEERING BRANCH
DEPT. OF PLANNING AND PERMITTING

DATE

40' 20' 0 40' 80' 120'

SCALE: 1"=40'

GRAPHIC SCALE

GARY I. FUNASAKI
LICENSED PROFESSIONAL ENGINEER
No. 4195-E
HAWAII, U.S.A.
13 NOV 2012

THIS WORK WAS PREPARED BY ME OR UNDER MY SUPERVISION. CONSTRUCTION OF THIS PROJECT WILL BE UNDER MY OBSERVATION. LICENSE EXPIRATION DATE: 04/30/14

REVISION DATE	DESCRIPTION	MADE BY	APPROVED

Community Planning and Engineering, Inc.
Engineering Design | Construction Management | Infrastructure Planning
1100 Alakea Street, Sixth Floor — Honolulu, Hawaii

EAST KAPOLEI II DEVELOPMENT INCREMENT 2B

HONOULIULI, EWA, OAHU, HAWAII
(DPP SUBD. FILE NO. 2011/SUB-155
OWNER & DEVELOPER: DEPARTMENT OF HAWAIIAN HOME LANDS
TAX MAP KEY: 9-1-17: Portion 110

ELECTRICAL DISTRIBUTION PARTIAL PLAN IV

DRAWN BY: CAD | ENGINEER: GF | CHECKED BY: GF

APPROVED:

HAWAIIAN ELECTRIC CO. DATE

CHIEF, TRAFFIC REVIEW BRANCH, D.P.P. DATE 6/15/13

SANDWICH ISLES COMMUNICATIONS, INC. 12/19/12 DATE

DATE

DWG. NO. E-8 SHEET 48 OF 78 SHEETS

FILE | POCKET | FOLDER | NO.

LAST SAVE: 09/06/12 @ 10:56:39 BY: RN PLOT SC 1=40.000000
Z:\ACAD\PROJECTS\29084F\E08_29084F_DistPlan04 XREFS: ACAD-XBASE_EXIL_INC_2B_(6-29-12) _XRH_29084F_BACKGROUND _XRH_29084F_ELEC-ALL

MATCHLINE "A" SEE CONT. SHT. E-10

FUTURE MIDDLE SCHOOL

ROAD "A"

ROAD "D2"

ROAD "D1"

ROAD "B"

EXST. EAST-WEST ROAD

MATCHLINE "B" SEE CONT. SHT. E-11

TYPICAL

2	20	4961
	4	

STATION NO. 13+17

2	20	4960
	3	

STATION NO. 12+00

2	20	4959
	2	

STATION NO. 10+90

2	20	4958
	1	

STATION NO. 9+79

20	4997
1	

STATION NO. 0+42

20	4998
2	

STATION NO. 1+18

20	5016
1	

STATION NO. 0+42

20	5017
2	

STATION NO. 1+12

20	5018
3	

STATION NO. 1+89

20	5019
4	

STATION NO. 2+76

20	5020
5	

STATION NO. 3+53

20	4999
3	

STATION NO. 1+93

20	5000
4	

STATION NO. 2+68

20	5021
6	

STATION NO. 4+31

20	5022
7	

STATION NO. 5+13

20	5001
5	

STATION NO. 3+63

20	5002
6	

STATION NO. 4+50

20	5003
7	

STATION NO. 5+25

20	5004
8	

STATION NO. 6+19

20	5005
9	

STATION NO. 7+12

20	5023
8	

STATION NO. 5+95

20	5025
10	

STATION NO. 7+76

20	5024
9	

STATION NO. 6+88

20	4968
5	

STATION NO. 11+18

20	5006
10	

STATION NO. 7+84

20	4967
4	

STATION NO. 10+42

20	4966
3	

STATION NO. 9+59

20	4965
2	

STATION NO. 8+75

20	5026
11	

STATION NO. 8+54

20	4964
1	

STATION NO. 8+00

47 M-168 A4 120V

41 M-168 A4 120V

42 M-168 A2 120V

48 M-168 A8 120V

44 M-168 A2 120V

43 M-168 A4 120V

55 M-168 B3 120V

11 M-168 B5 120V

12 M-168 B7 120V

56 M-168 B1 120V

13 M-168 B5 120V

14 M-168 B7 120V

NOTES:

1. EXPOSE DUCT(S), PROVIDE COUPLING(S) AND EXTEND.
2. IES TYPE III DISTRIBUTION.

NOTES FOR BEDDING BENEATH UNDERGROUND STRUCTURES:

1. BOXES AND STRUCTURES WITHOUT BOTTOM SLABS (OPEN BASE): 4" MINIMUM THICKNESS OF NO. 3 FINE GRAVEL; ASTM C-33-03, #67.
2. BOXES AND STRUCTURES WITH BOTTOM SLABS (CLOSED BASE): 4" MINIMUM THICKNESS OF CLEAN, WELL-GRADED GRANULAR MATERIAL WITH A MAXIMUM PARTICLE SIZE OF THREE (3) INCHES, AND LESS THAN THREE (3) PERCENT PASSING THE NO. 200 SIEVE OR SELECT BORROW.
3. PROVIDED BEDDING BENEATH MANHOLES, HANDHOLES AND PULLBOXES IN RELATIVELY UNIFORM LIFTS NO GREATER THAN SIX (6) INCHES IN LOOSE THICKNESS, MOISTURE CONDITIONED TO WITHIN THREE (3) PERCENT OF THEIR OPTIMUM MOISTURE CONTENT, AND UNIFORMLY COMPACTED TO AT LEAST NINETY (90) PERCENT OF THE MAXIMUM DRY DENSITY (ASTM D1557-02). CONTRACTOR TO SCHEDULE WITH CITY INSPECTORS FOR COMPACTION AND BEDDING INSTALLATION.

NORTH

STREET LIGHTING AND TRAFFIC SIGNAL PARTIAL PLAN I

SCALE: 1"=40'

APPROVED BY:

CHIEF, CIVIL ENGINEERING BRANCH DEPT. OF PLANNING AND PERMITTING — DATE 6/28/13

40' 20' 0 40' 80' 120'

SCALE: 1"=40'

GRAPHIC SCALE

GARY I. FUNASAKI LICENSED PROFESSIONAL ENGINEER No. 4195-E HAWAII, U.S.A.

13 NOV 2012

THIS WORK WAS PREPARED BY ME OR UNDER MY SUPERVISION. CONSTRUCTION OF THIS PROJECT WILL BE UNDER MY OBSERVATION. LICENSE EXPIRATION DATE: 04/30/14

REVISION DATE	DESCRIPTION	MADE BY	APPROVED

cp&e Community Planning and Engineering, Inc.
Engineering Design | Construction Management | Infrastructure Planning
1100 Alakea Street, 26th Floor Honolulu, Hawaii

EAST KAPOLEI II DEVELOPMENT INCREMENT 2B

HONOULIULI, EWA, OAHU, HAWAII
(DPP SUBD. FILE NO. 2011/SUB-155
OWNER & DEVELOPER: DEPARTMENT OF HAWAIIAN HOME LANDS
TAX MAP KEY: 9-1-17: Portion 110

STREET LIGHTING AND TRAFFIC SIGNAL PARTIAL PLAN I

DRAWN BY: CAD	ENGINEER: GF	CHECKED BY: GF

APPROVED:

DATE

CHIEF, TRAFFIC REVIEW BRANCH, D.P.P. — DATE 4/15/13

CHIEF, TRAFFIC SIGNALS AND TECHNOLOGY, D.T.S. — DATE 1/22/13

CHIEF, MECHANICAL/ELECTRICAL DIVISION, D.D.C. — DATE 1/24/2013

FILE	POCKET	FOLDER	NO.

DWG. NO. E-9

SHEET 49 OF 78 SHEETS

LAST SAVED: 06/26/13 10:18:19 AM BY GFUNASAKI
LAST PLOTTED: 06/26/13 10:19:01 AM BY GFUNASAKI
FILE NAME: J:\JOBS\2012\2012-028_EKII_INC_2B\CAD\PLANS\STREET_LIGHTING\2012-028_EKII_INC_2B_STREET_LIGHTING_PLAN_I.DWG

NOTES:

1. EXPOSE DUCT(S), PROVIDE COUPLING(S) AND EXTEND.
2. IES TYPE III DISTRIBUTION.

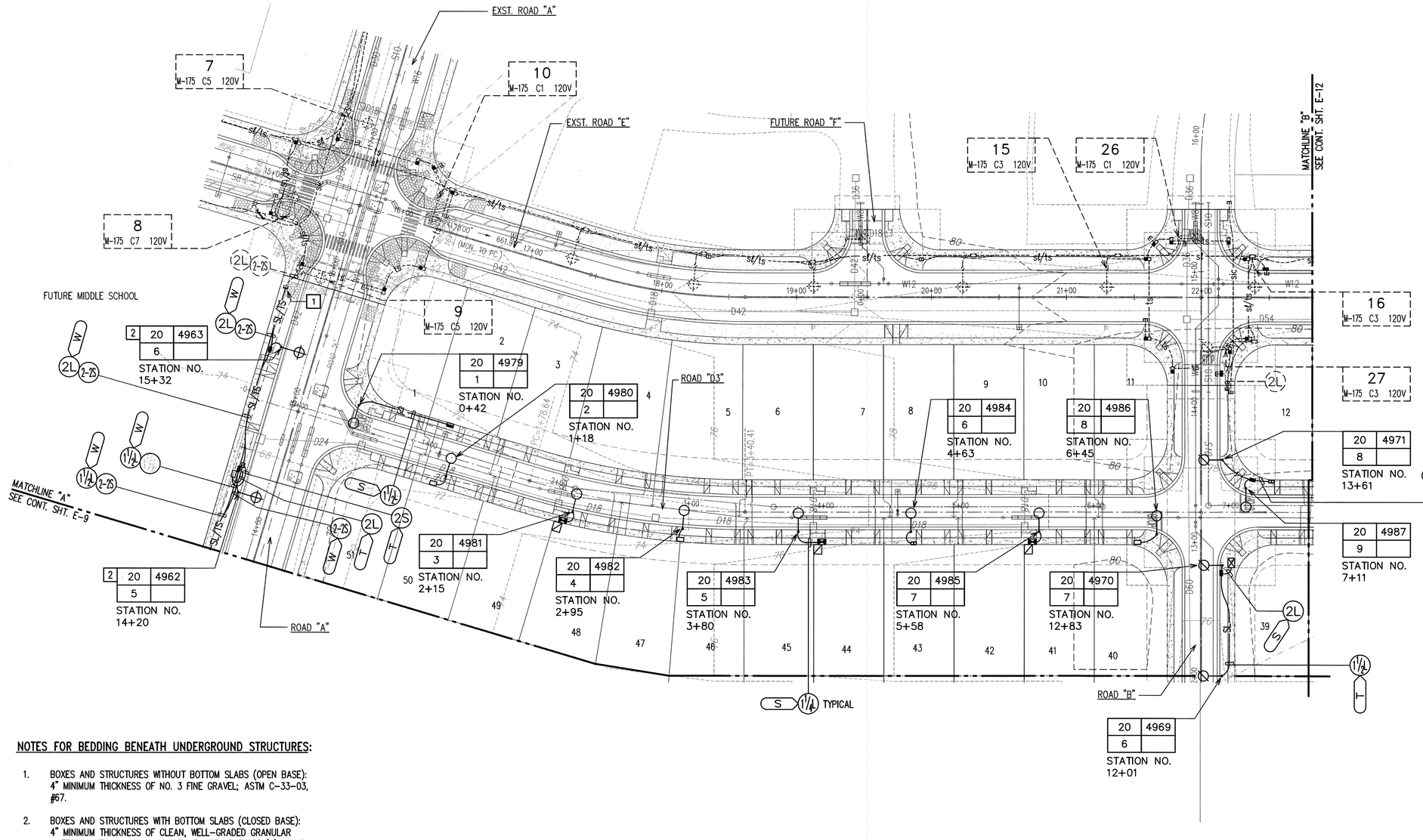

NOTES FOR BEDDING BENEATH UNDERGROUND STRUCTURES:

1. BOXES AND STRUCTURES WITHOUT BOTTOM SLABS (OPEN BASE): 4" MINIMUM THICKNESS OF NO. 3 FINE GRAVEL; ASTM C-33-03, #67.
2. BOXES AND STRUCTURES WITH BOTTOM SLABS (CLOSED BASE): 4" MINIMUM THICKNESS OF CLEAN, WELL-GRADED GRANULAR MATERIAL WITH A MAXIMUM PARTICLE SIZE OF THREE (3) INCHES, AND LESS THAN THREE (3) PERCENT PASSING THE NO. 200 SIEVE OR SELECT BORROW.
3. PROVIDED BEDDING BENEATH MANHOLES, HANDHOLES AND PULLBOXES IN RELATIVELY UNIFORM LIFTS NO GREATER THAN SIX (6) INCHES IN LOOSE THICKNESS, MOISTURE CONDITIONED TO WITHIN THREE (3) PERCENT OF THEIR OPTIMUM MOISTURE CONTENT, AND UNIFORMLY COMPACTED TO AT LEAST NINETY (90) PERCENT OF THE MAXIMUM DRY DENSITY (ASTM D1557-02). CONTRACTOR TO SCHEDULE WITH CITY INSPECTORS FOR COMPACTION AND BEDDING INSTALLATION.

NORTH

STREET LIGHTING AND TRAFFIC SIGNAL PARTIAL PLAN II

SCALE: 1"=40'

APPROVED BY:

M. [signature] 6/28/13

CHIEF, CIVIL ENGINEERING BRANCH — DATE
DEPT. OF PLANNING AND PERMITTING

40' 20' 0 40' 80' 120'

SCALE: 1"=40'

GRAPHIC SCALE

GARY I. FUNASAKI — LICENSED PROFESSIONAL ENGINEER — No. 4195-E — HAWAII, U.S.A. — 13 Nov 2012

THIS WORK WAS PREPARED BY ME OR UNDER MY SUPERVISION. CONSTRUCTION OF THIS PROJECT WILL BE UNDER MY OBSERVATION. LICENSE EXPIRATION DATE: 04/30/14

REVISION DATE	DESCRIPTION	MADE BY	APPROVED

Community Planning and Engineering, Inc.
Engineering Design | Construction Management | Infrastructure Planning
1100 Alakea Street, Sixth Floor — Honolulu, Hawaii

EAST KAPOLEI II DEVELOPMENT INCREMENT 2B

HONOULIULI, EWA, OAHU, HAWAII
(DPP SUBD. FILE NO. 2011/SUB-155
OWNER & DEVELOPER: DEPARTMENT OF HAWAIIAN HOME LANDS
TAX MAP KEY: 9-1-17: Portion 110

STREET LIGHTING AND TRAFFIC SIGNAL PARTIAL PLAN II

DRAWN BY: CAD | ENGINEER: GF | CHECKED BY: GF

APPROVED:

DATE — CHIEF, TRAFFIC REVIEW BRANCH, D.P.P. — DATE 6/15/13

CHIEF, TRAFFIC SIGNALS AND TECHNOLOGY, D.T.S. — DATE 1/28/13 — CHIEF, MECHANICAL/ELECTRICAL DIVISION, D.D.C. — DATE 1/31/2013

DWG. NO. E-10 — SHEET 50 OF 78 SHEETS

FILE	POCKET	FOLDER	NO.

NOTES:

1. EXPOSE DUCT(S), PROVIDE COUPLING(S) AND EXTEND.

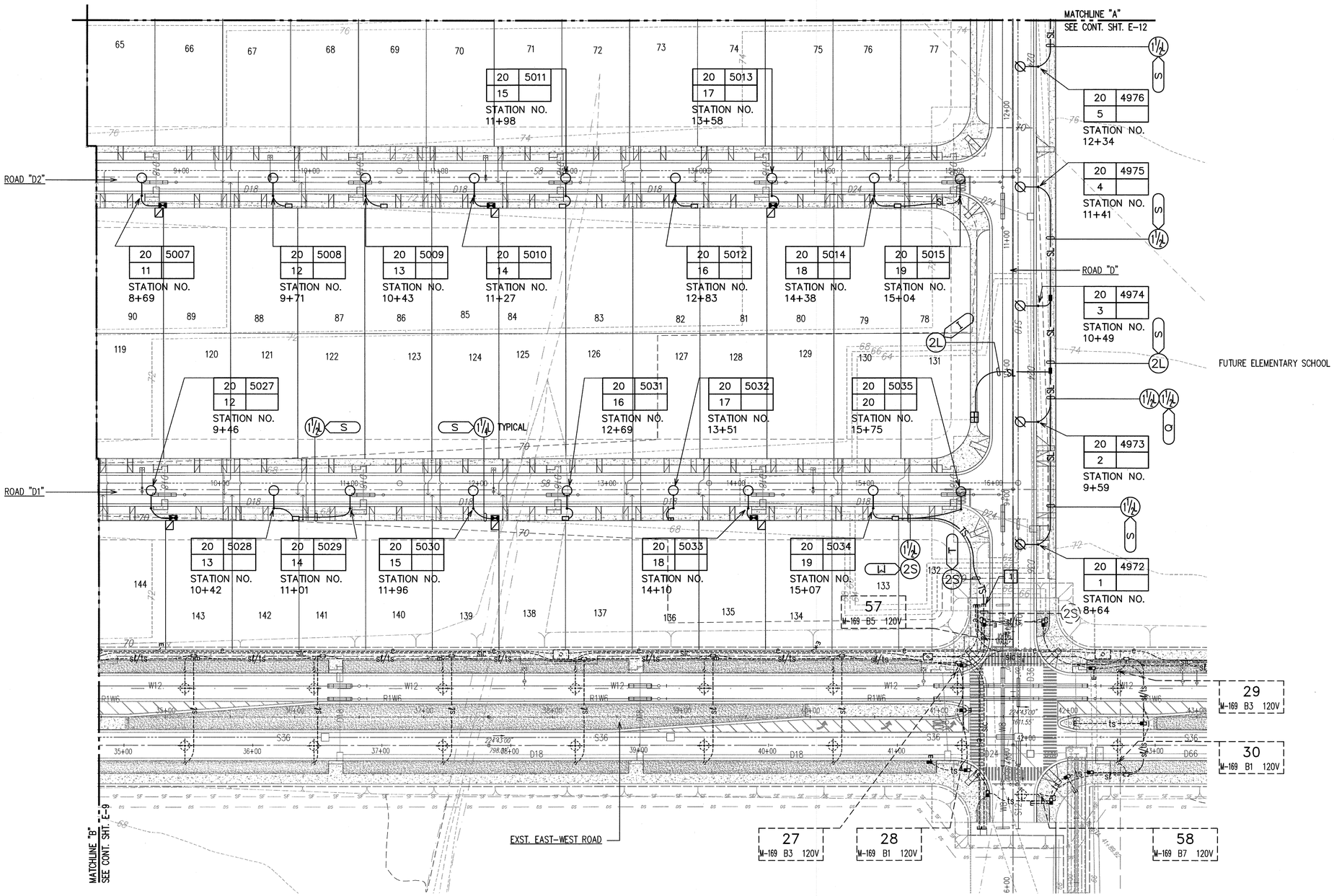

NOTES FOR BEDDING BENEATH UNDERGROUND STRUCTURES:

1. BOXES AND STRUCTURES WITHOUT BOTTOM SLABS (OPEN BASE): 4" MINIMUM THICKNESS OF NO. 3 FINE GRAVEL; ASTM C-33-03, #67.
2. BOXES AND STRUCTURES WITH BOTTOM SLABS (CLOSED BASE): 4" MINIMUM THICKNESS OF CLEAN, WELL-GRADED GRANULAR MATERIAL WITH A MAXIMUM PARTICLE SIZE OF THREE (3) INCHES, AND LESS THAN THREE (3) PERCENT PASSING THE NO. 200 SIEVE OR SELECT BORROW.
3. PROVIDED BEDDING BENEATH MANHOLES, HANDHOLES AND PULLBOXES IN RELATIVELY UNIFORM LIFTS NO GREATER THAN SIX (6) INCHES IN LOOSE THICKNESS, MOISTURE CONDITIONED TO WITHIN THREE (3) PERCENT OF THEIR OPTIMUM MOISTURE CONTENT, AND UNIFORMLY COMPACTED TO AT LEAST NINETY (90) PERCENT OF THE MAXIMUM DRY DENSITY (ASTM D1557-02). CONTRACTOR TO SCHEDULE WITH CITY INSPECTORS FOR COMPACTION AND BEDDING INSTALLATION.

NORTH

STREET LIGHTING AND TRAFFIC SIGNAL PARTIAL PLAN III

SCALE: 1"=40'

APPROVED BY:

CHIEF, CIVIL ENGINEERING BRANCH
DEPT. OF PLANNING AND PERMITTING

6/28/13
DATE

40' 20' 0 40' 80' 120'

SCALE: 1"=40'

GRAPHIC SCALE

GARY I. FUNASAKI
LICENSED PROFESSIONAL ENGINEER
No. 4195-E
HAWAII, U.S.A.

THIS WORK WAS PREPARED BY ME OR UNDER MY SUPERVISION. CONSTRUCTION OF THIS PROJECT WILL BE UNDER MY OBSERVATION. LICENSE EXPIRATION DATE: 04/30/14

REVISION DATE	DESCRIPTION	MADE BY	APPROVED

cp&e Community Planning and Engineering, Inc.
Engineering Design | Construction Management | Infrastructure Planning
1100 Alakea Street, 26th Floor Honolulu, Hawaii

EAST KAPOLEI II DEVELOPMENT INCREMENT 2B

HONOULIULI, EWA, OAHU, HAWAII
(DPP SUBD. FILE NO. 2011/SUB-155
OWNER & DEVELOPER: DEPARTMENT OF HAWAIIAN HOME LANDS
TAX MAP KEY: 9-1-17: Portion 110

STREET LIGHTING AND TRAFFIC SIGNAL PARTIAL PLAN III

DRAWN BY: CAD	ENGINEER: GF	CHECKED BY: GF

APPROVED:

6/28/13 DATE — CHIEF, TRAFFIC REVIEW BRANCH, D.P.P. — DATE

1/28/13 DATE — CHIEF, TRAFFIC SIGNALS AND TECHNOLOGY, D.T.S.

1/31/2013 DATE — CHIEF, MECHANICAL/ELECTRICAL DIVISION, D.D.C.

DWG. NO. E-11

SHEET 51 OF 78 SHEETS

FILE	POCKET	FOLDER	NO.

LAST SAVE: 06/06/13 @ 10:57:47 By: RH PLOT SC: 1=40.000000
Z:\CAD\PROJECTS\2908#\E11_2908#_LtgPlan03 XREFS: XCAD-XBASE_EKII_INC_2B_(6-29-12) _XRH_2908#_BACKGROUND _XRH_2908#_ELEC-ALL

NOTES:

1 EXPOSE DUCT(S), PROVIDE COUPLING(S) AND EXTEND.

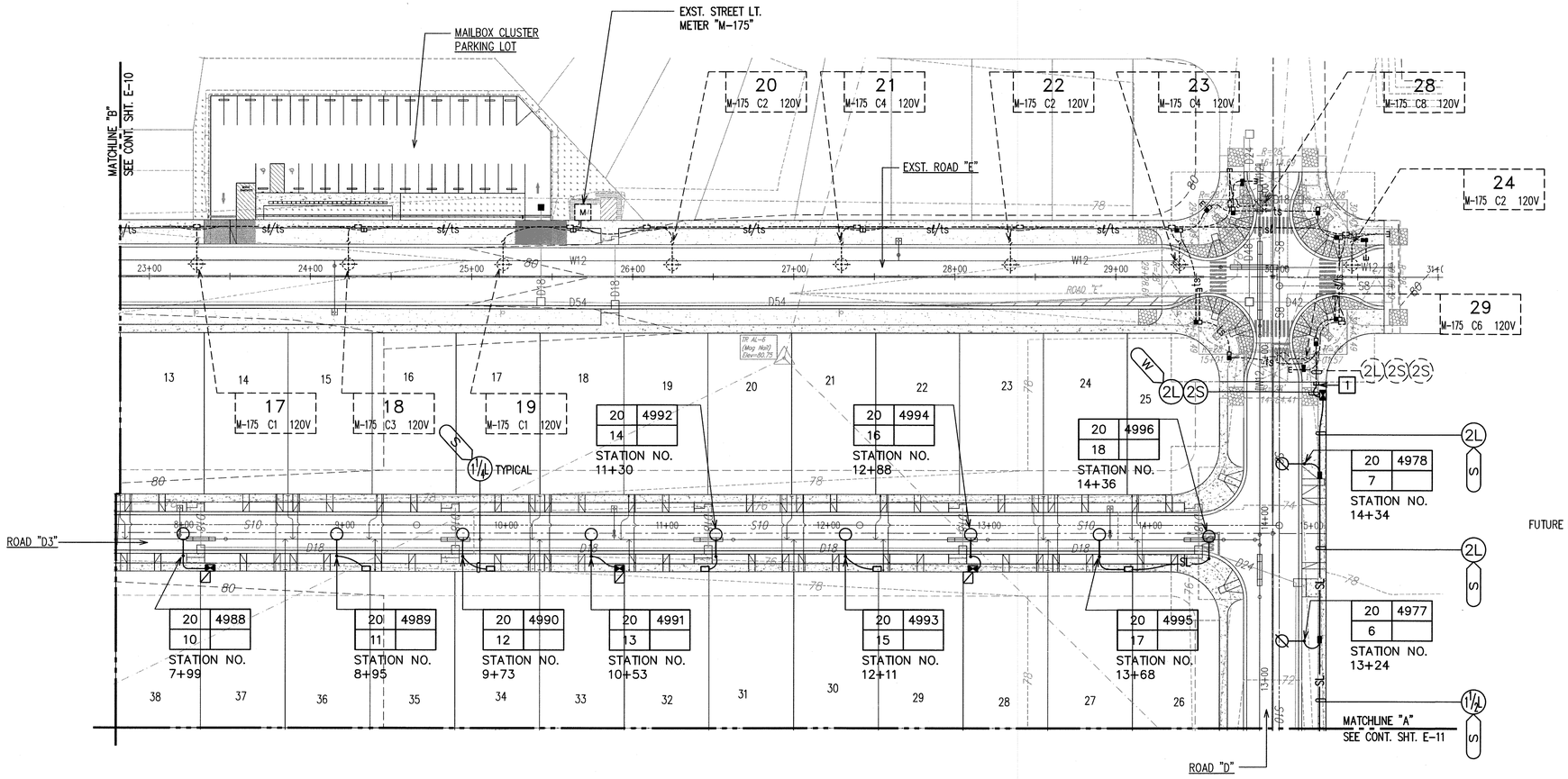

NOTES FOR BEDDING BENEATH UNDERGROUND STRUCTURES:

1. BOXES AND STRUCTURES WITHOUT BOTTOM SLABS (OPEN BASE): 4" MINIMUM THICKNESS OF NO. 3 FINE GRAVEL; ASTM C-33-03, #67.
2. BOXES AND STRUCTURES WITH BOTTOM SLABS (CLOSED BASE): 4" MINIMUM THICKNESS OF CLEAN, WELL-GRADED GRANULAR MATERIAL WITH A MAXIMUM PARTICLE SIZE OF THREE (3) INCHES, AND LESS THAN THREE (3) PERCENT PASSING THE NO. 200 SIEVE OR SELECT BORROW.
3. PROVIDED BEDDING BENEATH MANHOLES, HANDHOLES AND PULLBOXES IN RELATIVELY UNIFORM LIFTS NO GREATER THAN SIX (6) INCHES IN LOOSE THICKNESS, MOISTURE CONDITIONED TO WITHIN THREE (3) PERCENT OF THEIR OPTIMUM MOISTURE CONTENT, AND UNIFORMLY COMPACTED TO AT LEAST NINETY (90) PERCENT OF THE MAXIMUM DRY DENSITY (ASTM D1557-02). CONTRACTOR TO SCHEDULE WITH CITY INSPECTORS FOR COMPACTION AND BEDDING INSTALLATION.

NORTH

STREET LIGHTING AND TRAFFIC SIGNAL PARTIAL PLAN IV

SCALE: 1"=40'

APPROVED BY:

M. [signature] 6/28/13

CHIEF, CIVIL ENGINEERING BRANCH DEPT. OF PLANNING AND PERMITTING — DATE

40' 20' 0 40' 80' 120'

SCALE: 1"=40'

GRAPHIC SCALE

GARY I. FUNASAKI LICENSED PROFESSIONAL ENGINEER No. 4195-E HAWAII, U.S.A.

13 NOV 2012

THIS WORK WAS PREPARED BY ME OR UNDER MY SUPERVISION. CONSTRUCTION OF THIS PROJECT WILL BE UNDER MY OBSERVATION. LICENSE EXPIRATION DATE: 04/30/14

REVISION DATE	DESCRIPTION	MADE BY	APPROVED

Community Planning and Engineering, Inc.
Engineering Design | Construction Management | Infrastructure Planning
1100 Alakea Street, Sixth Floor — Honolulu, Hawaii

EAST KAPOLEI II DEVELOPMENT INCREMENT 2B

HONOULIULI, EWA, OAHU, HAWAII
(DPP SUBD. FILE NO. 2011/SUB-155
OWNER & DEVELOPER: DEPARTMENT OF HAWAIIAN HOME LANDS
TAX MAP KEY: 9-1-17: Portion 110

STREET LIGHTING AND TRAFFIC SIGNAL PARTIAL PLAN IV

DRAWN BY: CAD | ENGINEER: GF | CHECKED BY: GF

APPROVED:

DATE — CHIEF, TRAFFIC REVIEW BRANCH, D.P.P. — 6/15/13 DATE

CHIEF, TRAFFIC SIGNALS AND TECHNOLOGY, D.T.S. — 1/28/13 DATE — CHIEF, MECHANICAL/ELECTRICAL DIVISION, D.D.C. — 1/31/2013 DATE

DWG. NO. E-12 SHEET 52 OF 78 SHEETS

FILE | POCKET | FOLDER | NO.

LAST SAVE: 09/06/12 @ 10:58:12 BY: RN PLOT SC 1=40.000000
Z:\ACAD\PROJECTS\29084F\E12_29084F_LtgPlan04 XREFS: ACAD-XBASE_EXIL_INC_2B_(6-29-12) _XRH_29084F_BACKGROUND _XRH_29084F_ELEC-ALL

NOTES:

1. EXPOSE DUCT(S), PROVIDE COUPLING(S) & EXTEND.
2. PROVIDE HOUSE-SIDE SHIELD.

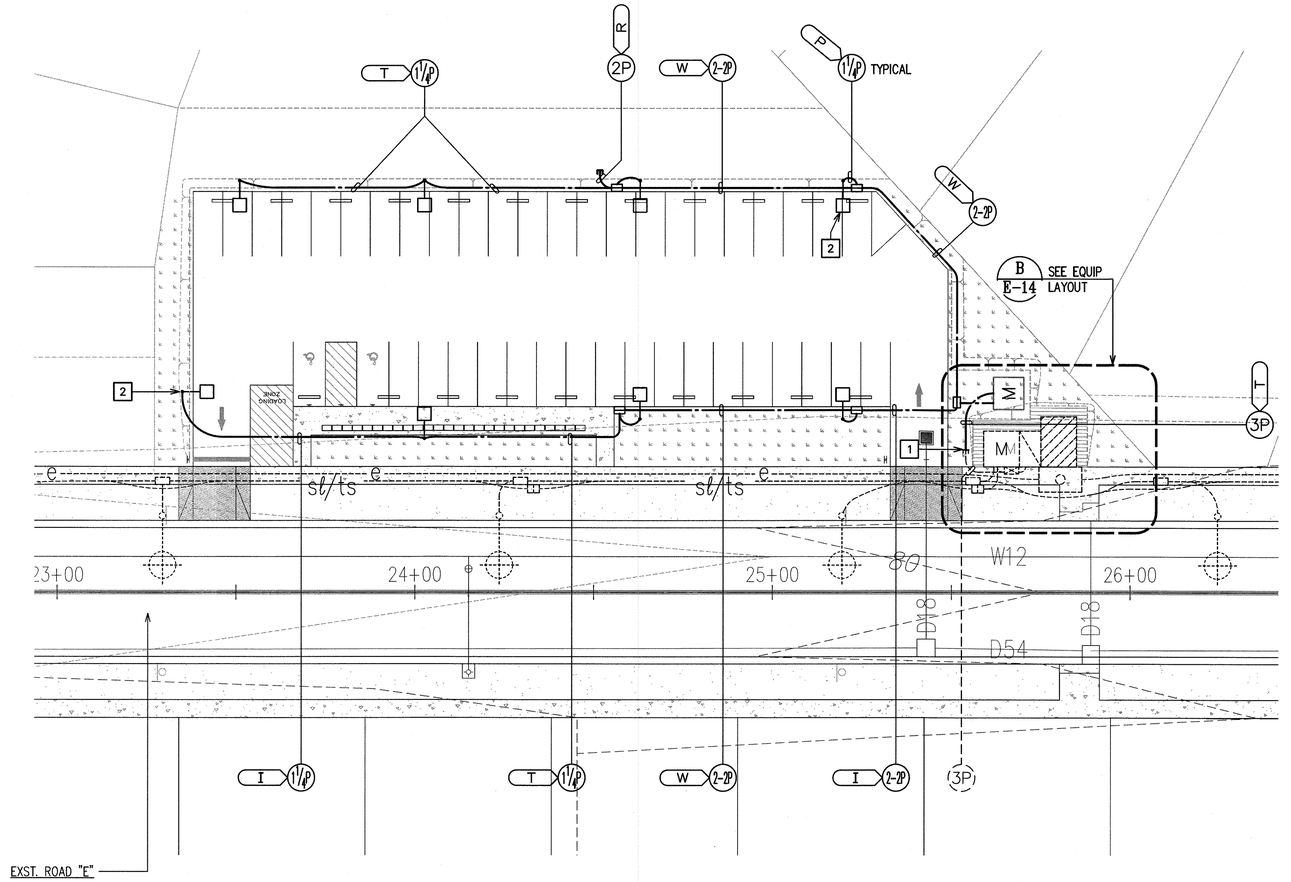

NORTH

MAILBOX CLUSTER PARKING LOT ELECTRICAL PLAN

SCALE: 1"=20'

20' 10' 0 20' 40' 60'

SCALE: 1"=20'

GRAPHIC SCALE

GARY I. FUNASAKI LICENSED PROFESSIONAL ENGINEER No. 4186-E HAWAII, U.S.A.

13 NOV 2012

THIS WORK WAS PREPARED BY ME OR UNDER MY SUPERVISION. CONSTRUCTION OF THIS PROJECT WILL BE UNDER MY OBSERVATION. LICENSE EXPIRATION DATE: 04/30/14

REVISION DATE	DESCRIPTION	MADE BY	APPROVED

cp&e **Community Planning and Engineering, Inc.**
Engineering Design | Construction Management | Infrastructure Planning
1100 Alakea Street, 6th Floor Honolulu, Hawaii

EAST KAPOLEI II DEVELOPMENT INCREMENT 2B

HONOULIULI, EWA, OAHU, HAWAII
(DPP SUBD. FILE NO. 2011/SUB-155
OWNER & DEVELOPER: DEPARTMENT OF HAWAIIAN HOME LANDS
TAX MAP KEY: 9-1-17: Portion 110

MAILBOX CLUSTER PARKING LOT ELECTRICAL PLAN

DRAWN BY: CAD	ENGINEER: GF	CHECKED BY: GF

APPROVED:

HAWAIIAN ELECTRIC CO. DATE

DATE

DATE

DATE

FILE	POCKET	FOLDER	NO.

DWG. NO. **E-13** SHEET 53 OF 78 SHEETS

LAST SAVE: 03/01/13 @ 10:13:56 BY: RN PLOT SC: 1=20.000000
Z:\JOB\PROJECTS\2084#\DTL_211108_MailboxCluster-Parking\dgn-Plan\ KEEPS: ACAD-ISUITE_ENV_INC_SR_GRAB _JRNL_2084#_BACKGROUND _JRN_2084#_ELEC-ALL _JRNL_211108_KEEPS-PARKINGLOT-ELEC-ALL

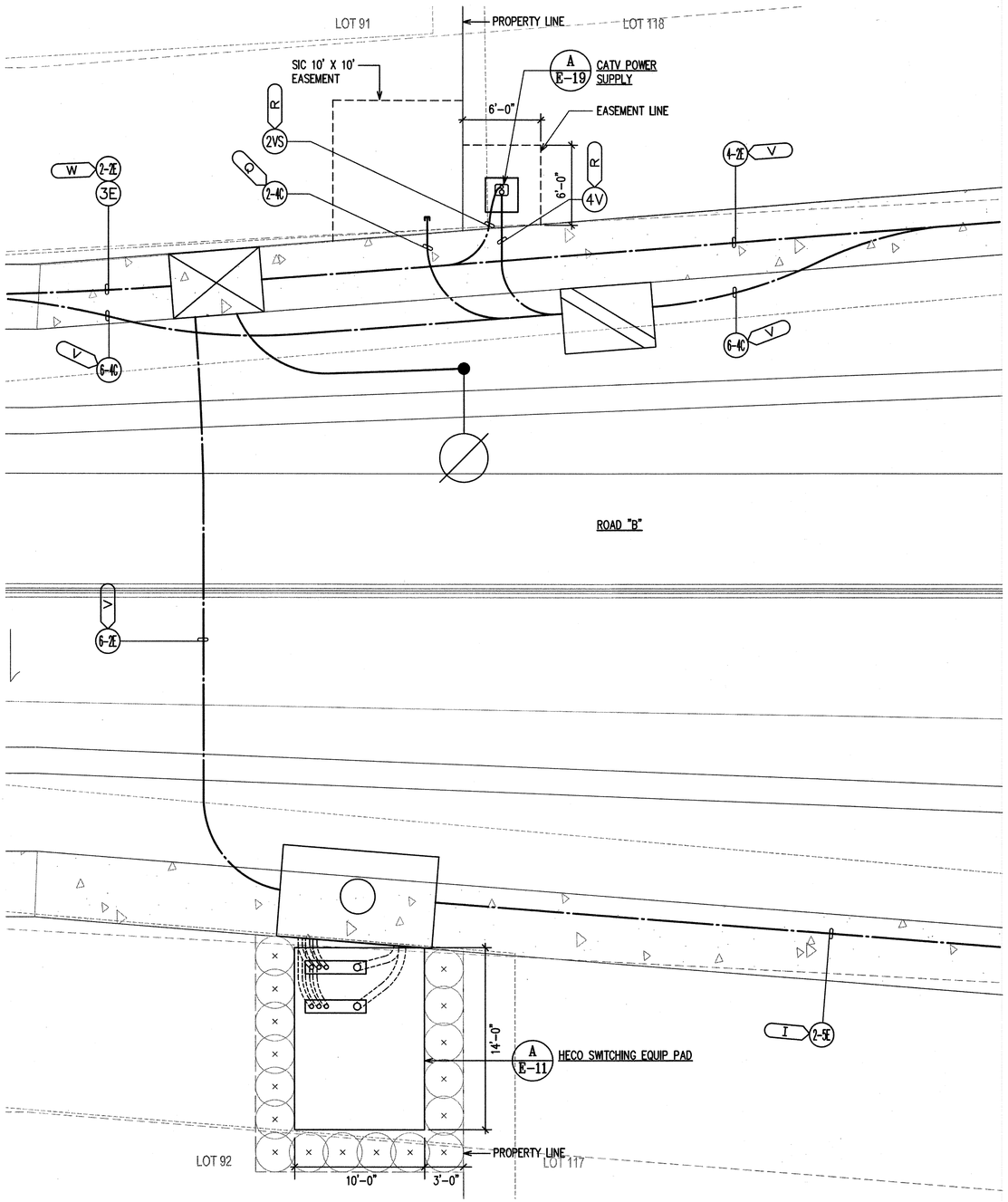

NORTH

A
E-14
EQUIPMENT LAYOUT
SCALE: 1"=5'

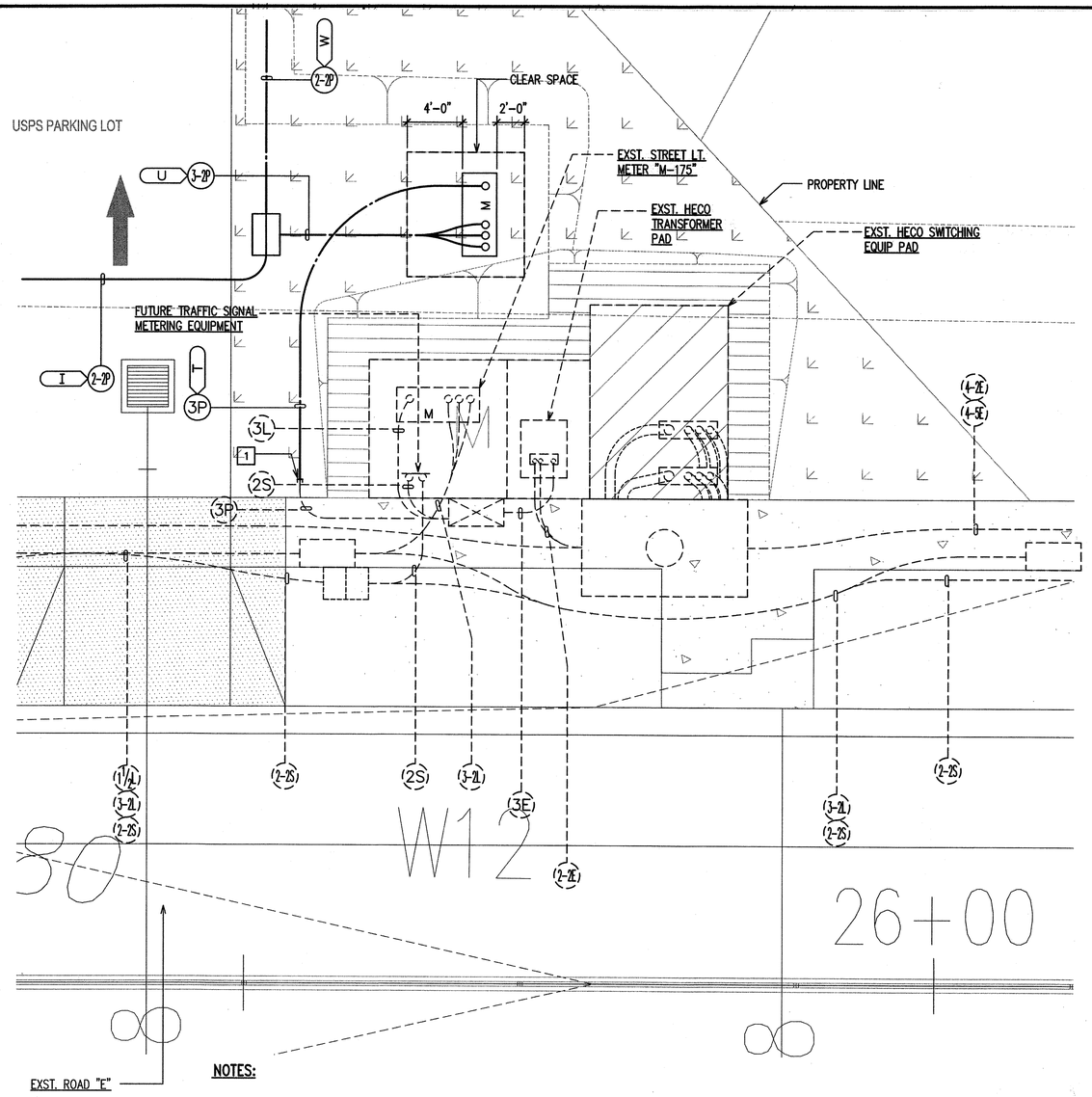

NOTES:

1 EXPOSE DUCT(S), PROVIDE COUPLING(S) AND EXTEND.

NORTH

B
E-14
EQUIPMENT LAYOUT
SCALE: 1"=5'

DRAWING **REVIEW**

Reviewed for HECO's Facilities Only

Date 12/13/12 By

Customer Installation Department
Hawaiian Electric Company, Inc.

HECO's review of these drawings shall in no way relieve the Customer, its Consultant, its Contractor or anyone acting on the Customer's behalf from the responsibility for engineering, design, materials and any other liability associated with this project.

5' 2.5' 0 5' 10' 15'
SCALE: 1"=5'
GRAPHIC SCALE

GARY I. FUNASAKI
LICENSED PROFESSIONAL ENGINEER
No. 4195-E
HAWAII, U.S.A.
13 Nov 2012

THIS WORK WAS PREPARED BY ME OR UNDER MY SUPERVISION. CONSTRUCTION OF THIS PROJECT WILL BE UNDER MY OBSERVATION. LICENSE EXPIRATION DATE: 04/30/14

REVISION DATE	DESCRIPTION	MADE BY	APPROVED

cp&e **Community Planning and Engineering, Inc.**
Engineering Design | Construction Management | Infrastructure Planning
1100 Alakea Street, 26th Floor Honolulu, Hawaii

EAST KAPOLEI II DEVELOPMENT INCREMENT 2B

HONOULIULI, EWA, OAHU, HAWAII
(DPP SUBD. FILE NO. 2011/SUB-155
OWNER & DEVELOPER: DEPARTMENT OF HAWAIIAN HOME LANDS
TAX MAP KEY: 9-1-17: Portion 110

EQUIPMENT LAYOUTS

DRAWN BY: CAD	ENGINEER: GF	CHECKED BY: GF

APPROVED:

HAWAIIAN ELECTRIC CO. DATE

SANDWORD SILES COMMUNICATIONS, INC. 12/19/12 DATE

DATE

DATE

FILE	POCKET	FOLDER	NO.

DWG. NO. **E-14**
SHEET 54 OF 78 SHEETS

LAST SAVE: 09/05/12 @ 10:59:28 BY: RN PLOT SC: 1=5
Z:\CAD\PROJECTS\2B\DWG\E14_2B2B4F_EnlargePlan01 XREFS: ACAD-XBASE_ENG_INC_2B (8-29-12) _XRN_21108B_USPS-PARKINGLOT-ELEC-ALL _XRN_2B2B4F_BACKGROUND _XRN_2B2B4F_ELEC-ALL

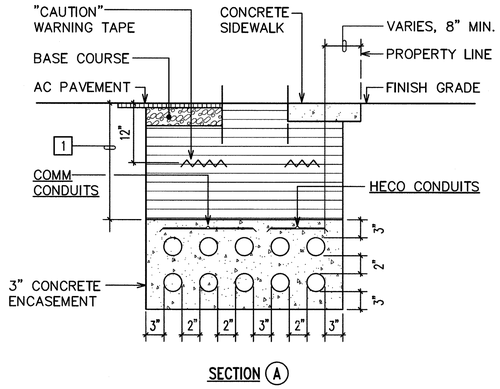

SECTION (A)

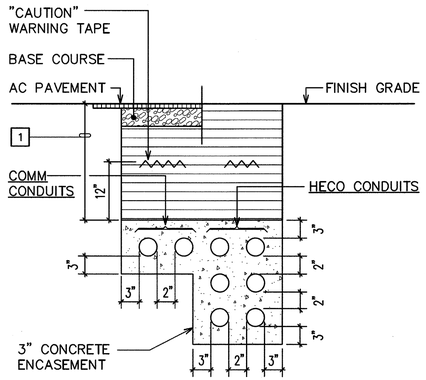

SECTION (B)

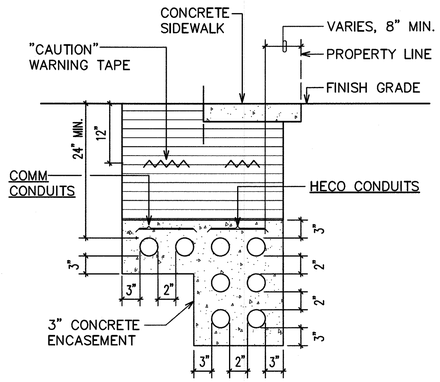

SECTION (C)

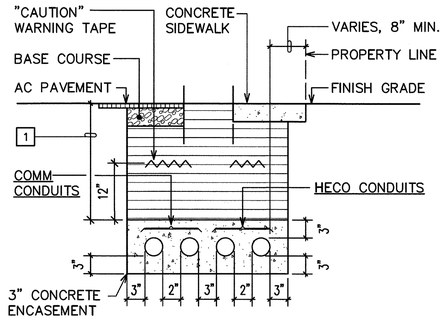

SECTION (D)

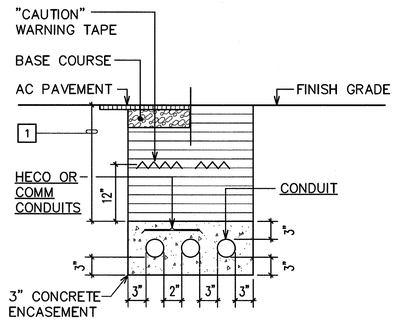

SECTION (E)

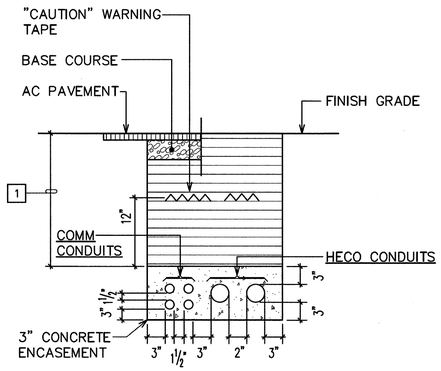

SECTION (F)

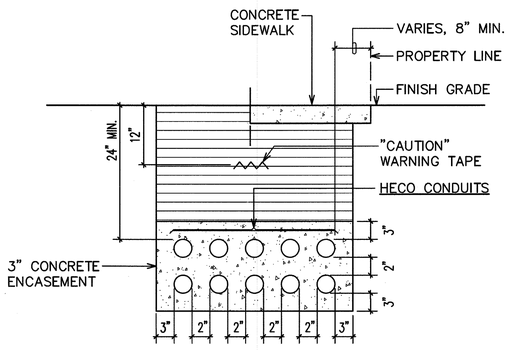

SECTION (G)

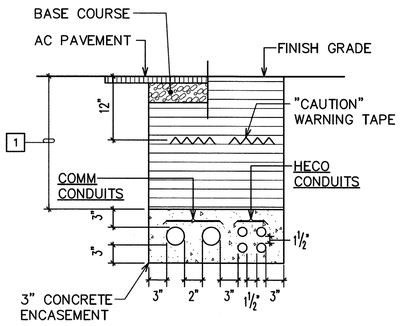

SECTION (H)

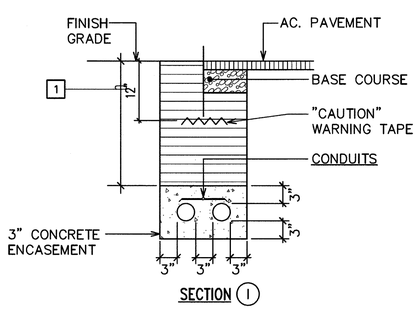

SECTION (I)

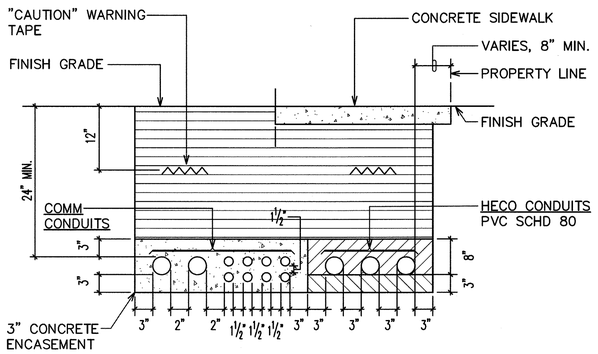

SECTION (J)

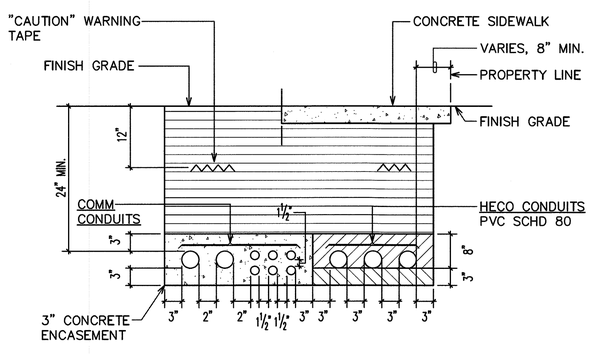

SECTION (K)

BACKFILL NOTES:

TYPE "A" BACKFILL – EARTH & GRAVEL. ROCK SIZE TO BE 1" MAX & THE MIXTURE TO CONTAIN NOT MORE THAN 50% BY VOLUME OF ROCK PARTICLES. THE MATERIAL SHALL BE NONEXPANSIVE. 95% COMPACTION.

TYPE "B" BACKFILL – EARTH & GRAVEL. MIXTURE MUST PASS A ½" MESH SCREEN & CONTAIN NOT MORE THAN 20% BY VOLUME OF ROCK PARTICLES. 95% COMPACTION.

NOTE – IF NORMAL MATERIAL AT BOTTOM OF TRENCH IS NOT TYPE "B", AN ADDITIONAL 3" SHALL BE EXCAVATED & TYPE "B" BACKFILL PROVIDED.

CONCRETE – 3" ENCASEMENT, 2500 PSI COMPRESSIVE STRENGTH @ 28 DAYS.

NOTES:

1. DEPTH VARIES; 36" MIN. UNDER AC PAVEMENT, AND 24" MIN. BEYOND AC PAVEMENT.
2. SEE CIVIL DETAILS FOR CONSTRUCTION OF IMPROVEMENTS IN CITY ROADWAY RIGHT-OF-WAY.

NOTE: SEE PLAN SHEETS FOR QUANTITY & SIZE OF CONDUITS

TYPICAL DUCT SECTIONS 2

NOT TO SCALE

DRAWING REVIEW

Reviewed for HECO's Facilities Only

Date 12/18/12 By

Customer Installation Department
Hawaiian Electric Company, Inc.

HECO's review of these drawings shall in no way relieve the Customer, its Consultant, its Contractor or anyone acting on the Customer's behalf from the responsibility for engineering, design, materials and any other liability associated with this project.

APPROVED BY:

CHIEF, CIVIL ENGINEERING BRANCH — DATE 6/28/13
DEPT. OF PLANNING AND PERMITTING

CHIEF, TRAFFIC SIGNALS AND TECHNOLOGY — DATE 1/28/13
DEPT. OF TRANSPORTATION SERVICES

GARY I. FUNASAKI — LICENSED PROFESSIONAL ENGINEER — No. 4195-E — HAWAII, U.S.A.

12/19/2012

THIS WORK WAS PREPARED BY ME OR UNDER MY SUPERVISION. CONSTRUCTION OF THIS PROJECT WILL BE UNDER MY OBSERVATION. LICENSE EXPIRATION DATE: 04/30/14

REVISION DATE	DESCRIPTION	MADE BY	APPROVED

cp&e — Community Planning and Engineering, Inc.
Engineering Design | Construction Management | Infrastructure Planning
1100 Alakea Street, 26th Floor — Honolulu, Hawaii

EAST KAPOLEI II DEVELOPMENT INCREMENT 2B

HONOULIULI, EWA, OAHU, HAWAII
(DPP SUBD. FILE NO. 2011/SUB-155
OWNER & DEVELOPER: DEPARTMENT OF HAWAIIAN HOME LANDS
TAX MAP KEY: 9-1-17: Portion 110

TYPICAL DUCT SECTIONS I

DRAWN BY: CAD	ENGINEER: GF	CHECKED BY: GF

APPROVED:

HAWAIIAN ELECTRIC CO. — DATE
CHIEF, TRAFFIC REVIEW BRANCH, D.P.P. — DATE
SANDWICH ISLES COMMUNICATIONS, INC. — DATE 12/19/12
CHIEF, MECHANICAL/ELECTRICAL DIVISION, D.D.C. — DATE 1/31/2013

FILE	POCKET	FOLDER	NO.

DWG. NO. E-15
SHEET 55 OF 78 SHEETS

LAST SAVE: 11/09/12 @ 08:59:16 BY: RN PLOT SC: 1=1.000000
Z:\CAD\PROJECTS\2908#\E15_2908#_Dust01

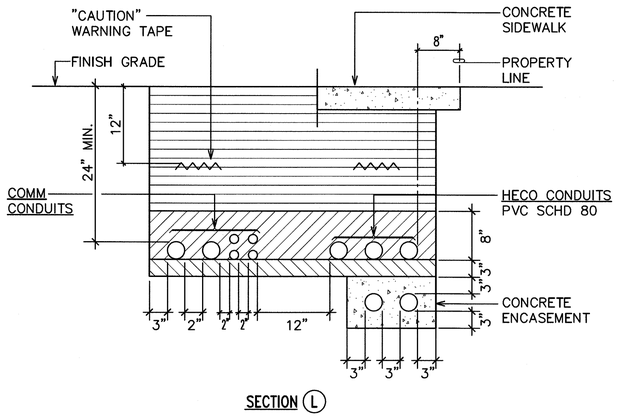

SECTION (L)

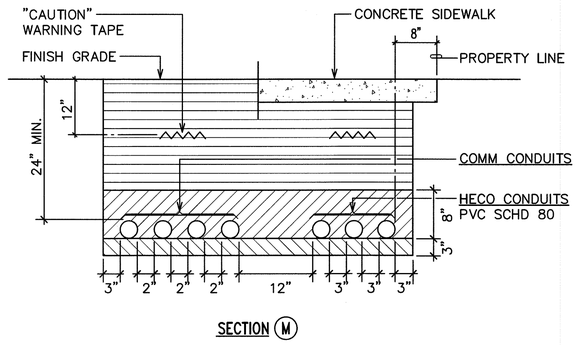

SECTION (M)

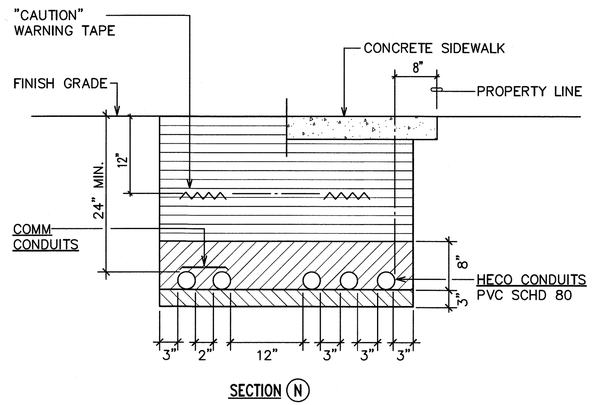

SECTION (N)

BACKFILL NOTES:

TYPE "A" BACKFILL – EARTH & GRAVEL. ROCK SIZE TO BE 1" MAX & THE MIXTURE TO CONTAIN NOT MORE THAN 50% BY VOLUME OF ROCK PARTICLES. THE MATERIAL SHALL BE NONEXPANSIVE. 95% COMPACTION.

TYPE "B" BACKFILL – EARTH & GRAVEL. MIXTURE MUST PASS A 1/2" MESH SCREEN & CONTAIN NOT MORE THAN 20% BY VOLUME OF ROCK PARTICLES. 95% COMPACTION.

NOTE – IF NORMAL MATERIAL AT BOTTOM OF TRENCH IS NOT TYPE "B", AN ADDITIONAL 3" SHALL BE EXCAVATED & TYPE "B" BACKFILL PROVIDED.

CONCRETE – 3" ENCASEMENT, 2500 PSI COMPRESSIVE STRENGTH @ 28 DAYS.

NOTES:

1. DEPTH VARIES; 36" MIN. UNDER AC PAVEMENT, AND 24" MIN. BEYOND AC PAVEMENT.
2. SEE CIVIL DETAILS FOR CONSTRUCTION OF IMPROVEMENTS IN CITY ROADWAY RIGHT-OF-WAY.

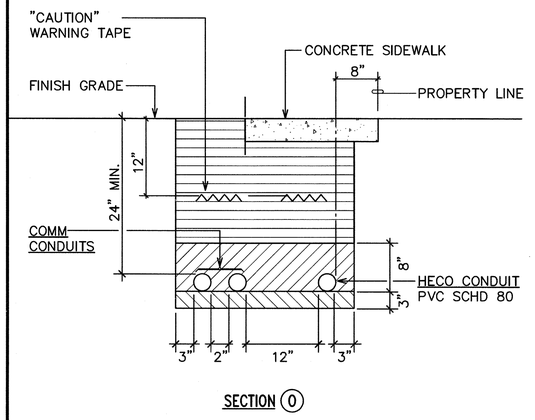

SECTION (O)

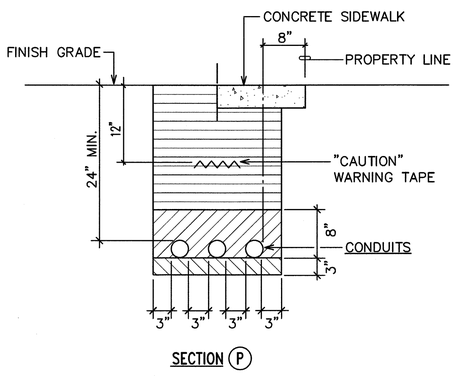

SECTION (P)

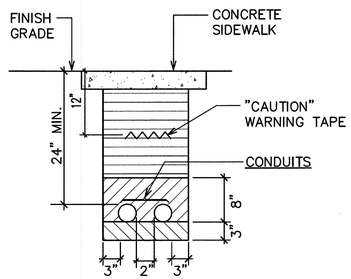

SECTION (Q)

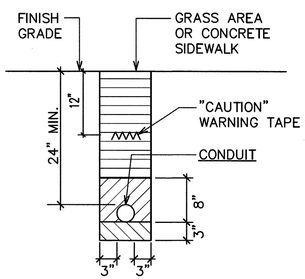

SECTION (R)

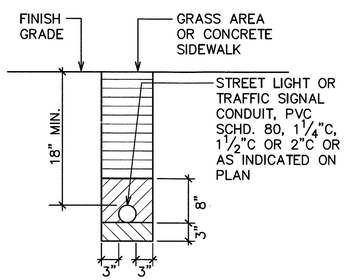

SECTION (S)

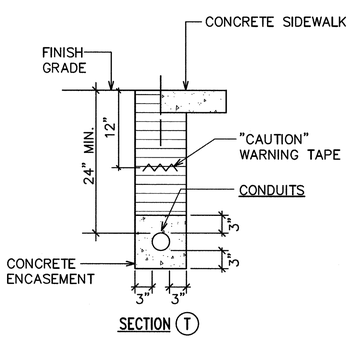

SECTION (T)

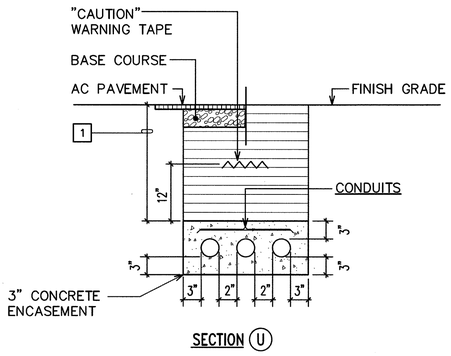

SECTION (U)

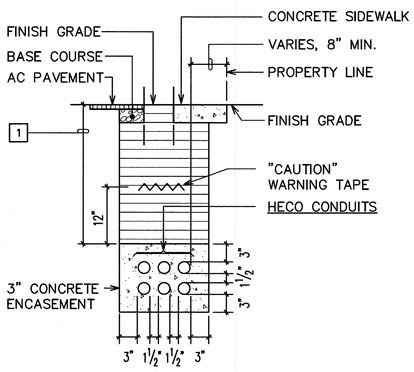

SECTION (V)

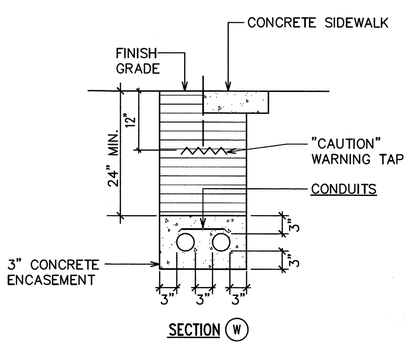

SECTION (W)

NOTE: SEE PLAN SHEETS FOR QUANTITY & SIZE OF CONDUITS

TYPICAL DUCT SECTIONS [2]

NOT TO SCALE

DRAWING REVIEW

Reviewed for HECO's Facilities Only

Date 12/13/12 By

Customer Installation Department
Hawaiian Electric Company, Inc.

HECO's review of these drawings shall in no way **relieve the Customer**, its Consultant, its Contractor or anyone acting on the Customer's behalf of their responsibility for engineering, design, materials and any other liability associated with this project.

APPROVED BY:

CHIEF, CIVIL ENGINEERING BRANCH DEPT. OF PLANNING AND PERMITTING — DATE 6/28/13

CHIEF, TRAFFIC SIGNALS AND TECHNOLOGY DEPT. OF TRANSPORTATION SERVICES — DATE 1/28/13

GARY I. FUNASAKI LICENSED PROFESSIONAL ENGINEER No. 9195-E HAWAII, U.S.A.

13 NOV 2012

THIS WORK WAS PREPARED BY ME OR UNDER MY SUPERVISION. CONSTRUCTION OF THIS PROJECT WILL BE UNDER MY OBSERVATION. LICENSE EXPIRATION DATE: 04/30/14

REVISION DATE	DESCRIPTION	MADE BY	APPROVED

cp&e **Community Planning and Engineering, Inc.**
Engineering Design | Construction Management | Infrastructure Planning
1100 Alakea Street, 26th Floor Honolulu, Hawaii

EAST KAPOLEI II DEVELOPMENT INCREMENT 2B

HONOULIULI, EWA, OAHU, HAWAII
(DPP SUBD. FILE NO. 2011/SUB-155
OWNER & DEVELOPER: DEPARTMENT OF HAWAIIAN HOME LANDS
TAX MAP KEY: 9-1-17: Portion 110

TYPICAL DUCT SECTIONS II

DRAWN BY: CAD	ENGINEER: GF	CHECKED BY: GF

APPROVED:

HAWAIIAN ELECTRIC CO. DATE

CHIEF, TRAFFIC REVIEW BRANCH, D.P.P. 4/15/13 DATE

SANDWICH ISLES COMMUNICATIONS, INC. 12/19/12 DATE

CHIEF, MECHANICAL/ELECTRICAL DIVISION, D.D.C. 1/31/2013 DATE

FILE	POCKET	FOLDER	NO.

DWG. NO. **E-16**

SHEET 56 OF 78 SHEETS

LAST SAVE: 09/06/12 @ 11:00:08 BY: RN PLOT SC: 1"=0'-1"
Z:\CAD\PROJECTS\29084F\E16_29084F_Duct02

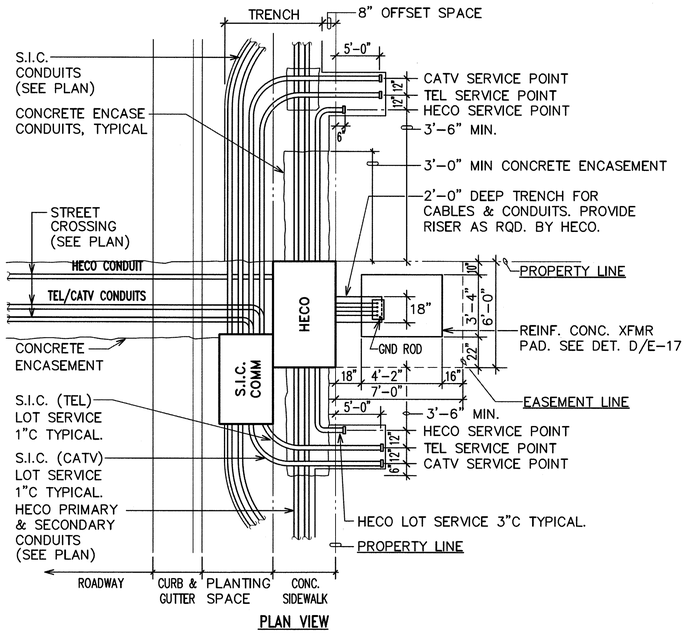

PLAN VIEW

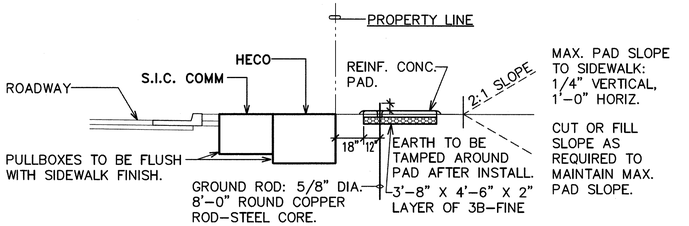

ELEVATION

NOTES:

1. REINFORCED CONCRETE TRANSFORMER PAD TO BE CONSTRUCTED AS SHOWN ON THIS SHEET & HECO STANDARD DRAWING NO. 011249 & NO. 30-5001.
2. PROVIDE #4 BARE COPPER GND WIRE FROM HECO BOX WHERE INDICATED ON PLAN. PROVIDE 5'-0" SLACK NEATLY COILED IN EACH AREA FOR CONNECTION BY RESPECTIVE UTILITY COMPANY.
3. GRADE AND COMPACT LOT AS REQUIRED BY HECO.
4. HIGHEST FRONT CORNER OF TRANSFORMER PAD LOT SHALL MATCH FINAL SIDEWALK GRADE.
5. CONCRETE ENCASE ALL HECO PRIMARY DUCTS AND COMM 4" DUCTS THAT ARE NOT INSTALLED UNDER CONCRETE SIDEWALK.

A / E-17 TYPICAL TRANSFORMER PAD LOT
NOT TO SCALE

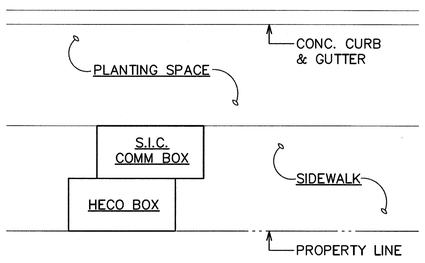

B / E-17 TYPICAL HANDHOLE GROUP ARRANGEMENT
NOT TO SCALE

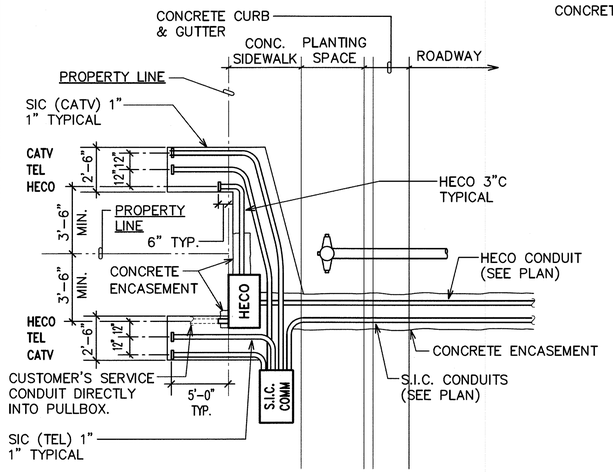

PLAN VIEW

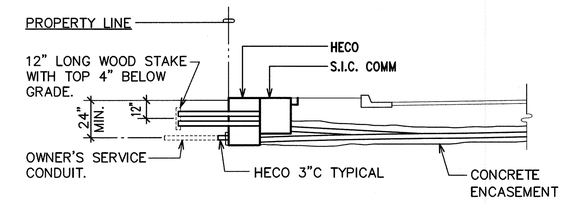

ELEVATION

NOTES:

1. CONCRETE ENCASE ALL HECO PRIMARY DUCTS AND COMM 4" DUCTS THAT ARE NOT INSTALLED UNDER CONCRETE SIDEWALK.
2. MAINTAIN 3'-0" MIN. CLEARANCE. VERIFY CLEARANCE REQUIREMENTS AND ADJUST ELEC WORK AS NECESSARY.

C / E-17 TYPICAL LOT SERVICE
NOT TO SCALE

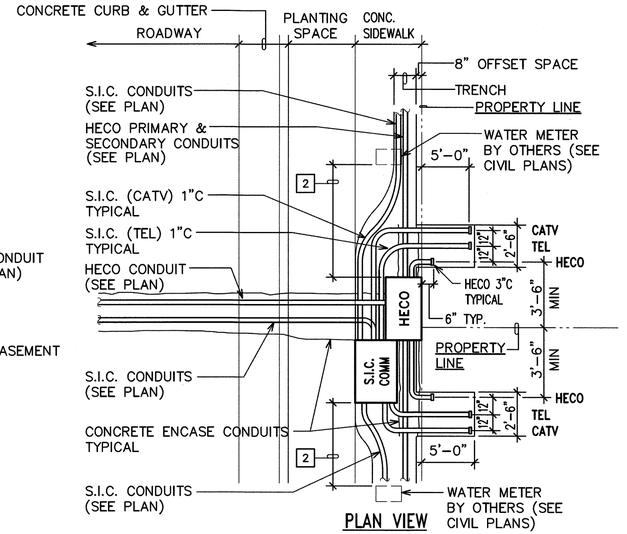

PLAN VIEW

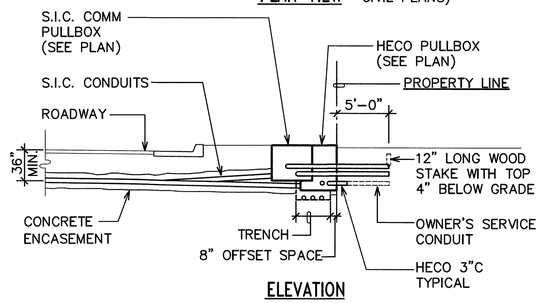

ELEVATION

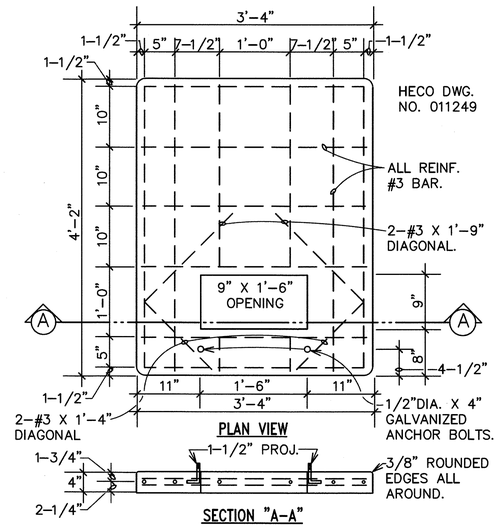

NOTES:

1. COMPRESSIVE STRENGTH OF CONCRETE : 3000 PSI IN 28 DAYS.
2. REINFORCING ROUND DEFORMED BAR SHALL BE CLEAN & NEW.
3. CURE CONCRETE BY APPROVED METHOD.
4. TOP OF CONC. PAD TO BE SMOOTH, TRUE & LEVEL, FREE FROM DEFECTS.
5. CONTRACTOR HAS OPTION OF FURNISHING CAST-IN-PLACE OR PRECAST.

D / E-17 CONCRETE TRANSFORMER PAD DETAIL
NOT TO SCALE

DRAWING REVIEW

Reviewed for HECO's Facilities Only

Date 12/13/12 By

Customer Installation Department
Hawaiian Electric Company, Inc.

HECO's review of these drawings shall in no way relieve the Customer, its Consultant, its Contractor or anyone acting on the Customer's behalf from the responsibility for engineering, design, materials and liability associated with this project.

GARY I. FUNASAKI LICENSED PROFESSIONAL ENGINEER No. 4195-E HAWAII, U.S.A.

13 NOV 2012

THIS WORK WAS PREPARED BY ME OR UNDER MY SUPERVISION. CONSTRUCTION OF THIS PROJECT WILL BE UNDER MY OBSERVATION. LICENSE EXPIRATION DATE: 04/30/14

REVISION DATE	DESCRIPTION	MADE BY	APPROVED

cp&e Community Planning and Engineering, Inc.
Engineering Design | Construction Management | Infrastructure Planning
1100 Alakea Street, 26th Floor Honolulu, Hawaii

EAST KAPOLEI II DEVELOPMENT INCREMENT 2B

HONOULIULI, EWA, OAHU, HAWAII
(DPP SUBD. FILE NO. 2011/SUB-155
OWNER & DEVELOPER: DEPARTMENT OF HAWAIIAN HOME LANDS
TAX MAP KEY: 9-1-17: Portion 110

TYPICAL TRANSFORMER PAD & LOT SERVICE DETAILS

DRAWN BY: CAD	ENGINEER: GF	CHECKED BY: GF

APPROVED:

HAWAIIAN ELECTRIC CO. DATE

SANDWICH ISLES COMMUNICATIONS, INC. 12/19/12 DATE

DATE

DATE

FILE	POCKET	FOLDER	NO.

DWG. NO. E-17 SHEET 57 OF 78 SHEETS

LAST SAVE: 09/06/12 @ 11:00:25 BY: RN PLOT SC: 1'-0"=1'
Z:\CAD\PROJECTS\2909#F&T_2909#F_Lot5.dwg

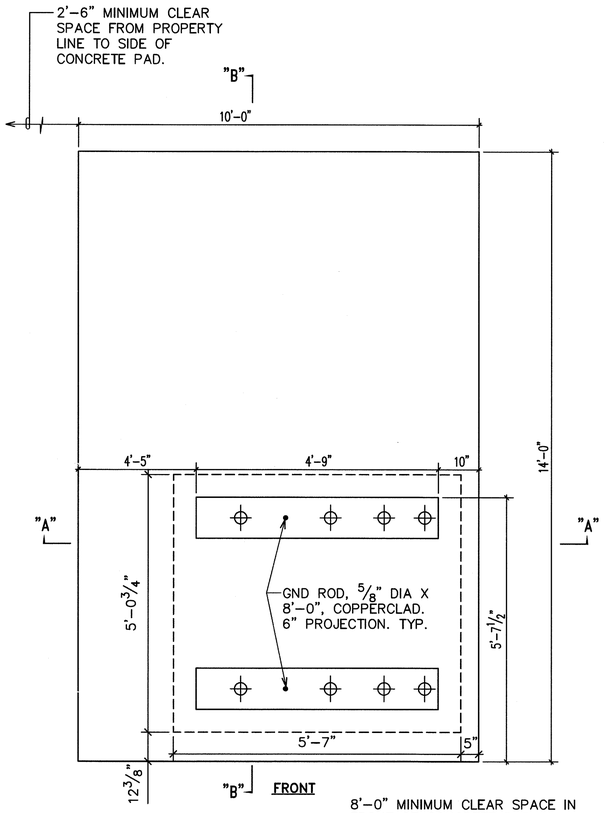

FRONT

8'-0" MINIMUM CLEAR SPACE IN FRONT OF CONCRETE PAD.

PLAN

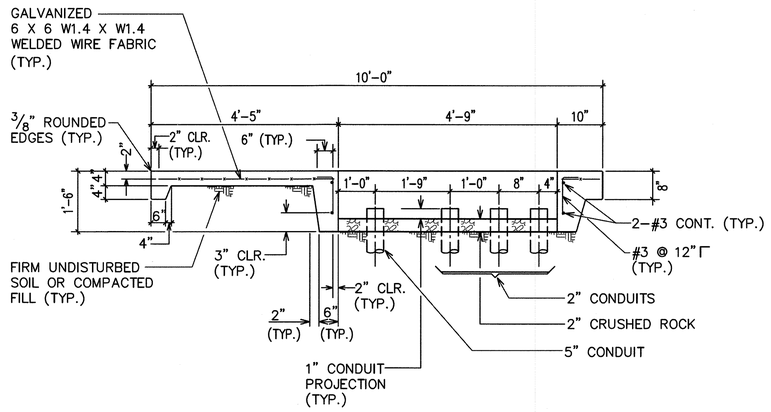

SECTION "A-A"

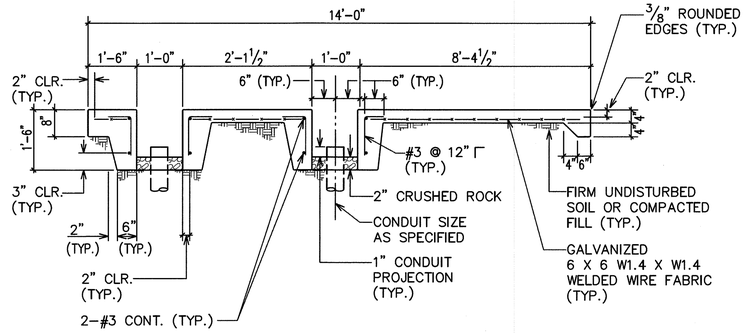

SECTION "B-B"

NOTES:

1. CONCRETE COMPRESSIVE STRENGTH: 3000 PSI 28 DAYS. HECO STD. SPECIFICATION CS7401.
2. REINFORCING: CLEAN AND NEW ROUND DEFORMED BARS (GR 40) AND GALVANIZED 6 X 6 W1.4 X W1.4 WELDED WIRE FABRIC.
3. TOP OF CONCRETE PAD TO BE SMOOTH AND TRUE. OTHER EXPOSED SURFACES TO BE SMOOTH AND FREE FROM DEFECTS.
4. REFER TO STD. 30-5002 FOR SLOPE AND RETAINING WALL CLEARANCE REQUIREMENTS FOR SURROUNDING PROPERTY. WATER SPRINKLER SHOULD BE COORDINATED WITH THE LANDSCAPE ARCHITECT SO AS TO NOT SPRAY WATER ONTO ELECTRICAL EQUIPMENT.
5. CONSTRUCTION TO COMPLY WITH ACI 318 AS AMENDED.
6. WEIGHT OF SWITCHGEAR EQUALS 2,150 POUNDS.

A E-18 AUTOMATIC TRANSFER SWITCHING EQUIPMENT PAD

NOT TO SCALE

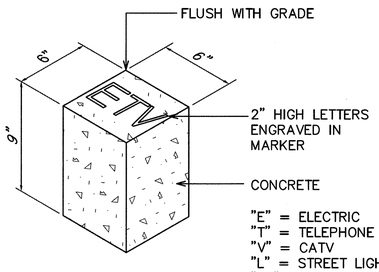

B E-18 CONCRETE STUB UP MARKER

NOT TO SCALE

CONDUIT SCHEDULE

ITEM	DESCRIPTION
(2E)	HECO 2" CONDUIT
(2-2E)	HECO 2-2" CONDUITS
(3-2E)	HECO 3-2" CONDUITS
(6-2E)	HECO 6-2" CONDUITS
(3E)	HECO 3" CONDUIT
(2-3E)	HECO 2-3" CONDUITS
(4E)	HECO 4" CONDUIT
(2-4E)	HECO 2-4" CONDUITS
(4-4E)	HECO 4-4" CONDUITS
(2-5E)	HECO 2-5" CONDUITS
(4-5E)	HECO 4-5" CONDUITS
(2-1C)	SANDWICH ISLES COMM UD(2x1-1")
(4-1C)	SANDWICH ISLES COMM UD(4x1-1")
(6-1C)	SANDWICH ISLES COMM UD(3x2-1")
(8-1C)	SANDWICH ISLES COMM UD(4x2-1")
(12-1C)	SANDWICH ISLES COMM UD(6x2-1")
(4C)	SANDWICH ISLES COMM UD(1x1-4")
(2-4C)	SANDWICH ISLES COMM UD(2x1-4")
(4-4C)	SANDWICH ISLES COMM UD(2x2-4")
(6-4C)	SANDWICH ISLES COMM UD(3x2-4")
(1 1/4)	STREET LIGHT 1 1/4" CONDUIT WITH WIRING
(1 1/2)	STREET LIGHT 1 1/2" CONDUIT WITH WIRING
(2L)	STREET LIGHT 2" CONDUIT WITH WIRING
(2S)	TRAFFIC SIGNAL 2" CONDUIT
(2-2S)	TRAFFIC SIGNAL 2-2" CONDUITS
(2V)	CATV 2" CONDUIT
(4V)	CATV 4" CONDUIT
(2-4V)	CATV 2-4" CONDUIT
(2VS)	CATV 2" POWER SUPPLY CONDUIT
(1P)	SECONDARY POWER 1" CONDUIT
(2P)	SECONDARY POWER 2" CONDUIT
(2-2P)	SECONDARY POWER 2-2" CONDUITS
(3-2P)	SECONDARY POWER 3-2" CONDUITS
(3P)	SECONDARY POWER 3" CONDUIT

NOTE: DASHED SYMBOL INDICATES EXST

DRAWING REVIEW

Reviewed for HECO's Facilities Only

Date 12/12/12 By

Customer Installation Department
Hawaiian Electric Company, Inc.

HECO's review of these drawings shall in no way relieve the Customer, its Consultant, its Contractor or anyone acting on the Customer's behalf of the responsibility for engineering, design, materials and any other liability associated with this project.

APPROVED BY:

CHIEF, TRAFFIC SIGNALS AND TECHNOLOGY
DEPT. OF TRANSPORTATION SERVICES
CITY & COUNTY OF HONOLULU

1/28/13
DATE

GARY I. FUNASAKI
LICENSED PROFESSIONAL ENGINEER
No. 4105-E
HAWAII, U.S.A.

13 NOV 2012

THIS WORK WAS PREPARED BY ME OR UNDER MY SUPERVISION. CONSTRUCTION OF THIS PROJECT WILL BE UNDER MY OBSERVATION. LICENSE EXPIRATION DATE: 04/30/14

REVISION DATE	DESCRIPTION	MADE BY	APPROVED

cp&e Community Planning and Engineering, Inc.
Engineering Design | Construction Management | Infrastructure Planning
1100 Alakea Street, Sixth Floor, Honolulu, Hawaii

EAST KAPOLEI II DEVELOPMENT INCREMENT 2B

HONOULIULI, EWA, OAHU, HAWAII
(DPP SUBD. FILE NO. 2011/SUB-155
OWNER & DEVELOPER: DEPARTMENT OF HAWAIIAN HOME LANDS
TAX MAP KEY: 9-1-17: Portion 110

MISCELLANEOUS DETAILS & SCHEDULES

DRAWN BY: CAD	ENGINEER: GF	CHECKED BY: GF

APPROVED:

HAWAIIAN ELECTRIC CO. DATE

CHIEF, TRAFFIC REVIEW BRANCH, D.P.P. DATE 1/31/2013

SANDWICH ISLES COMMUNICATIONS, INC. DATE 12/19/12

CHIEF, MECHANICAL/ELECTRICAL DIVISION, D.D.C. DATE 1/31/2013

DWG. NO. E-18

SHEET 58 OF 78 SHEETS

FILE	POCKET	FOLDER	NO.

LAST SAVE: 09/06/12 @ 11:09:42 BY: RN PLOT SC: 1'-0"=1"
Z:\CAD\PROJECTS\2x36#1\EIS_2x36#1_DH01

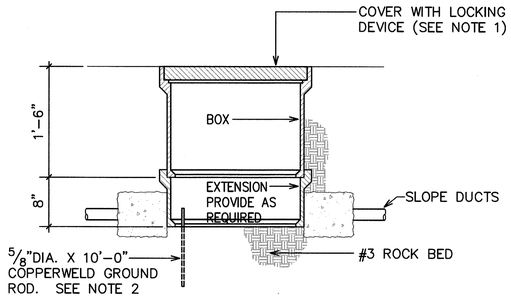

ELEVATION

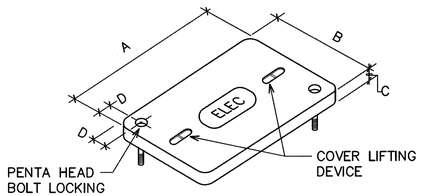

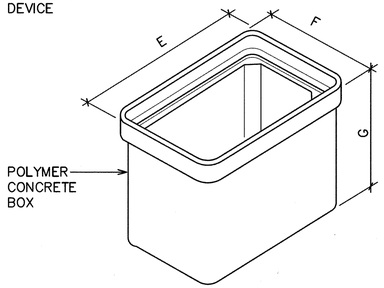

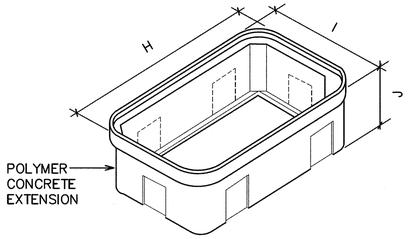

NOTES:

1. TO PROPERLY SECURE THE COVER, BE SURE THAT THE PENTAHEAD BOLTS ARE IN PLACE AND TIGHTENED. THE PENTA BOLTS SHALL BE FASTENED SECURELY TO THE COVERS (BY MEANS OF A COTTER PIN, FOR EXAMPLE), SO THE BOLTS CANNOT BE EASILY REMOVED FROM THE COVERS, EVEN WHEN THE COVERS ARE REMOVED FROM THE BOXES.
2. GROUND ROD SHALL BE INSTALLED IN THE CORNER, 6" FROM EACH WALL AND 6" ABOVE FINAL FLOOR GRADE.
3. NON-CONCRETE BOXES, COVERS, AND EXTENSIONS SHALL BE RATED FOR A VERTICAL LOAD OF 20,000 LBS (20K) MINIMUM.

NON-CONCRETE BOX SCHEDULE

ITEM	13" X 24" PULLBOX	17" X 30" PULLBOX	24" X 36" PULLBOX
A	$23\frac{1}{4}$	$30\frac{1}{2}$	$35\frac{5}{8}$
B	$13\frac{3}{4}$	$17\frac{1}{2}$	24
C	2	2	3
D	$1\frac{3}{4}$	$2\frac{1}{2}$	$2\frac{3}{4}$
E	$24\frac{1}{2}$	$31\frac{3}{4}$	$36\frac{7}{8}$
F	15	$18\frac{3}{4}$	$25\frac{1}{4}$
G	18	18	18
H	$29\frac{1}{4}$	$36\frac{1}{2}$	$41\frac{7}{8}$
I	$19\frac{3}{4}$	$23\frac{1}{2}$	$30\frac{1}{4}$
J	9	9	9

NOTE: ALL DIMENSIONS ARE IN INCHES & ARE NOMINAL.

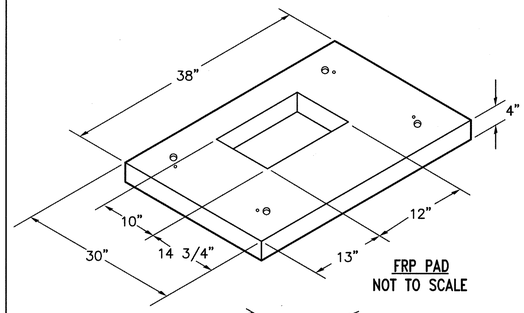

FRP PAD
NOT TO SCALE

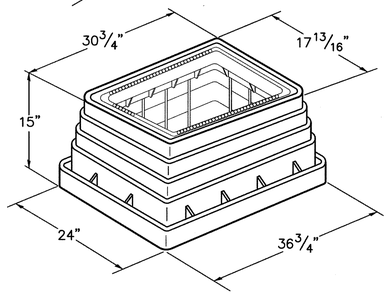

STRUCTURAL PLASTIC SUPPORT BOX
NOT TO SCALE

A E-19 NON-CONCRETE SIGNAL BOX
NOT TO SCALE

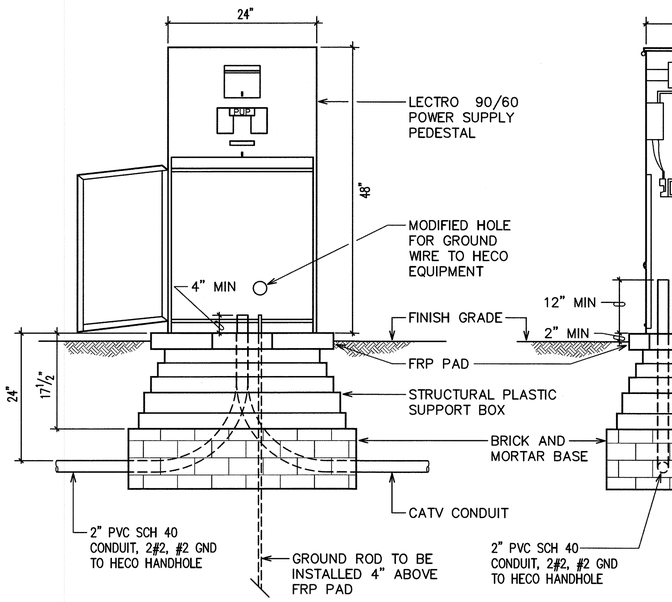

FRONT ELEVATION

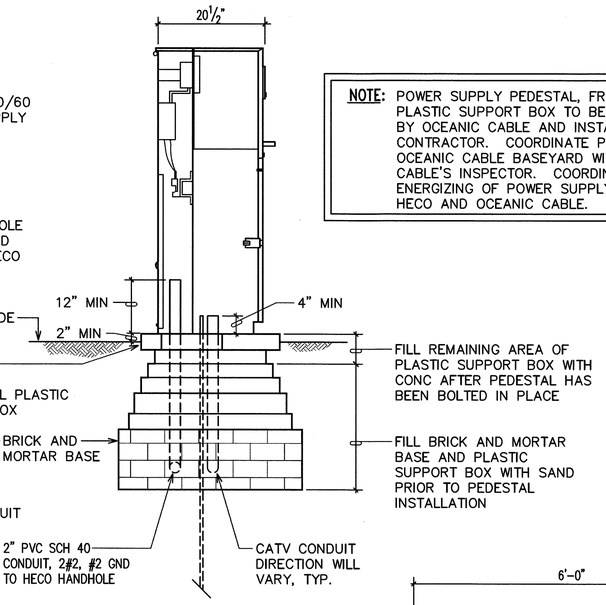

SIDE ELEVATION

NOTE: POWER SUPPLY PEDESTAL, FRP PAD AND PLASTIC SUPPORT BOX TO BE FURNISHED BY OCEANIC CABLE AND INSTALLED BY CONTRACTOR. COORDINATE PICK UP AT OCEANIC CABLE BASEYARD WITH OCEANIC CABLE'S INSPECTOR. COORDINATE ENERGIZING OF POWER SUPPLY WITH HECO AND OCEANIC CABLE.

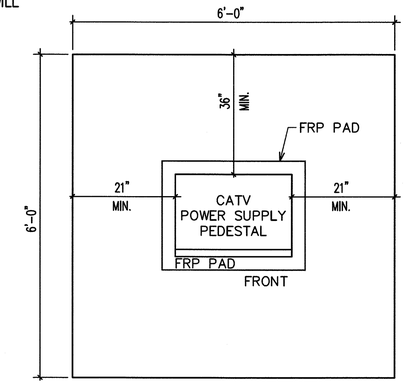

CATV 6'-0" X 6'-0" EASEMENT

EASEMENT SITE PLAN
NOT TO SCALE

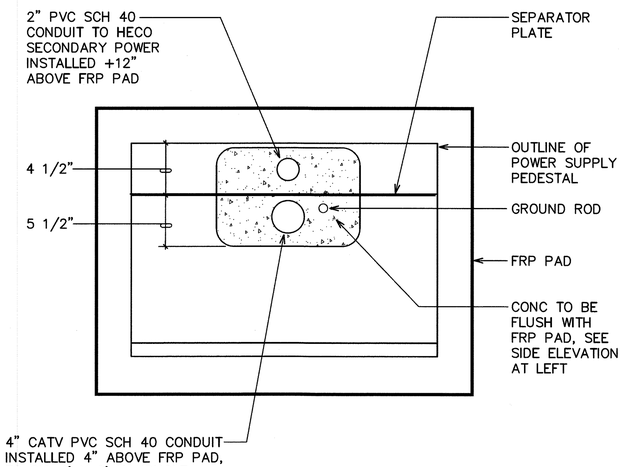

TOP VIEW OF FRP PAD
NOT TO SCALE

B E-19 CATV POWER SUPPLY PEDESTAL DETAILS
NOT TO SCALE

DRAWING REVIEW

Reviewed for HECO's Facilities Only

Date 12/13/12 By _____

Customer Installation Department
Hawaiian Electric Company, Inc.

HECO's review of these drawings shall in no way relieve the Customer, its Consultant, its Contractor or anyone acting on the Customer's behalf from the responsibility for engineering, design, materials and any other liability associated with this project.

GARY I. FUNASAKI LICENSED PROFESSIONAL ENGINEER No. 4195-E HAWAII, U.S.A.
3 NOV 2012

THIS WORK WAS PREPARED BY ME OR UNDER MY SUPERVISION. CONSTRUCTION OF THIS PROJECT WILL BE UNDER MY OBSERVATION. LICENSE EXPIRATION DATE: 04/30/14

REVISION DATE	DESCRIPTION	MADE BY	APPROVED

cp&e Community Planning and Engineering, Inc.
Engineering Design | Construction Management | Infrastructure Planning
1100 Alakea Street, 26th Floor Honolulu, Hawaii

EAST KAPOLEI II DEVELOPMENT INCREMENT 2B
HONOULIULI, EWA, OAHU, HAWAII
(DPP SUBD. FILE NO. 2011/SUB-155
OWNER & DEVELOPER: DEPARTMENT OF HAWAIIAN HOME LANDS
TAX MAP KEY: 9-1-17: Portion 110

CATV POWER SUPPLY & PULLBOX DETAILS

DRAWN BY: CAD	ENGINEER: GF	CHECKED BY: GF

APPROVED:

HAWAIIAN ELECTRIC CO.	DATE	OCEANIC TIME WARNER CABLE	DATE
SANDWICH-ELLIS COMMUNICATIONS, INC.	12/18/12 DATE		DATE

FILE	POCKET	FOLDER	NO.

DWG. NO. E-19
SHEET 59 OF 78 SHEETS

LAST SAVE: 09/05/12 @ 11:00:57 BY: RN PLOT SC: 1'-0"=1'
Z:\ACAD\PROJECTS\2808#F\E19_2808#F_SIL1-2x003

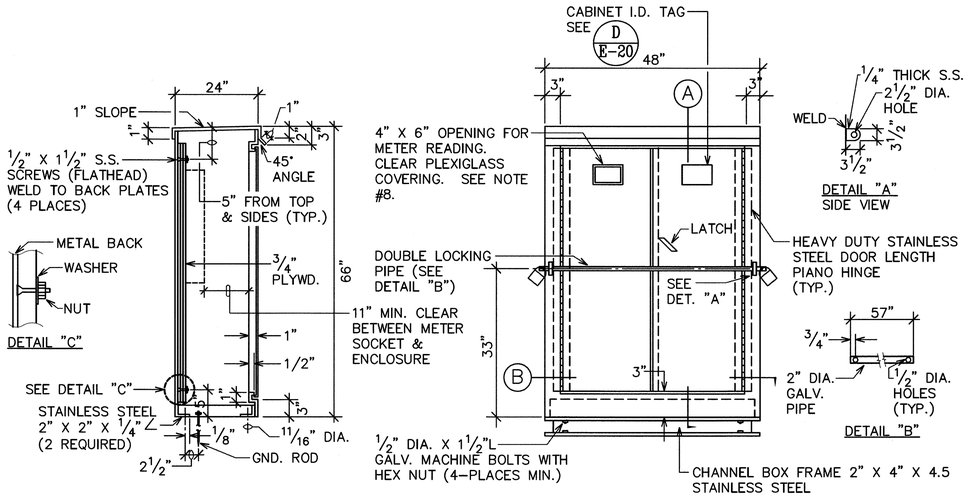

NOTES:

1. CABINET TO BE PRIMED WITH ONE COAT SHOP PRIMER.
2. PLYWOOD TO BE 3/4" THICK (MIN.) TERMITE TREATED PLYWOOD. (EXTERIOR GRADE)
3. MADE FROM 10 GAUGE TYPE 316 STAINLESS SHEEL.
4. PROVIDE ACRYLIC ENAMEL FINISH, COLOR TO MATCH TRANS-FORMER. (2 COATS)
5. ENCLOSURE SHALL BE NEMA 3R WITH NEOPRENE GASKETING.
6. PADLOCKS:
   1 - HECO FURNISHED
   1 - CONTRACTOR FURNISHED, BRASS CORBIN SESAMEE COMBINATION
7. SHOP FABRICATION DRAWINGS SHALL BE SUBMITTED FOR APPROVAL.
8. LOCATION OF OPENING FOR METER READER TO CORRESPOND WITH LOCATION OF METER (CENTER OPENING WITH METER SOCKET).
9. MAINTAIN 4'-0" MIN. CLEARANCE FRONTING CABINET DOOR, UNLESS INDICATED OTHERWISE.

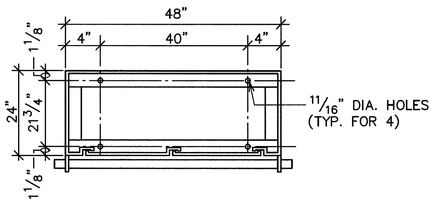

SECTION "B"
(STAINLESS STEEL ANGLE FRAME)

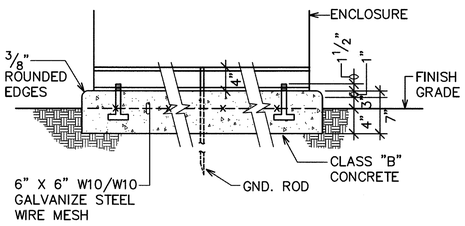

FRONT

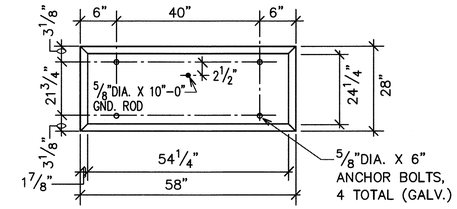

PLAN

CONCRETE PAD

A E-20 METERING EQUIPMENT CABINET
NOT TO SCALE

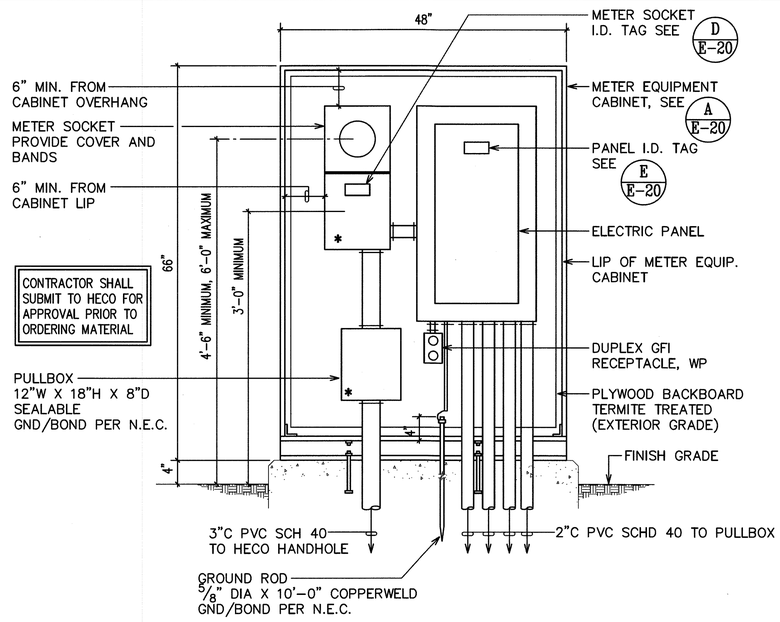

SEE THIS SHEET FOR ONE-LINE DIAGRAM

NOTE: "*" DENOTES PROVISIONS FOR HECO SEALS.

B E-20 ELECTRICAL METERING EQUIPMENT ELEVATION
NOT TO SCALE

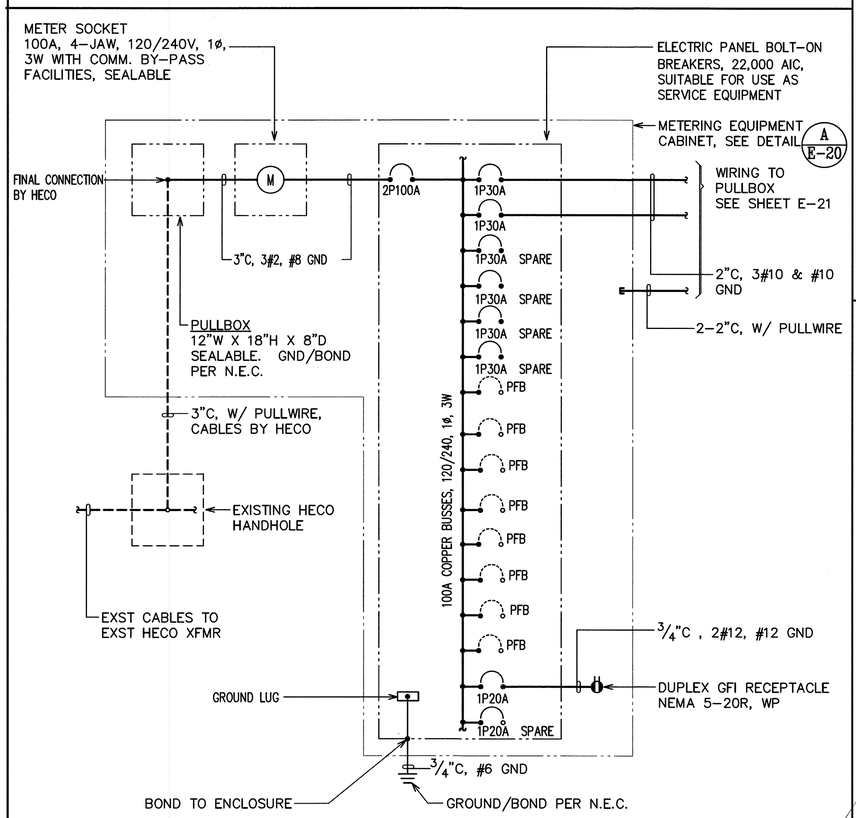

C E-20 ONE-LINE DIAGRAM

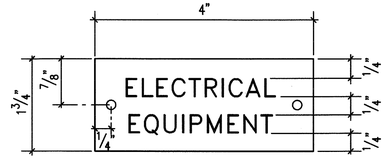

NOTES:

1. USE 2 PLY PLASTIC - BLACK, WHITE.
2. LETTER SIZE SHALL BE 1/2" HIGH AND ENGRAVED 1/16" WIDE, WHITE IN COLOR.
3. ATTACH TO EQUIPMENT ENCLOSURE WITH NO.7 STAINLESS STEEL DRIVE SCREWS.
4. CABINET I.D. TAG: ELECTRICAL EQUIPMENT
   METER SOCKET: "PKG LOT LIGHTS".

D E-20 ELEC EQUIP I.D. TAG
NOT TO SCALE

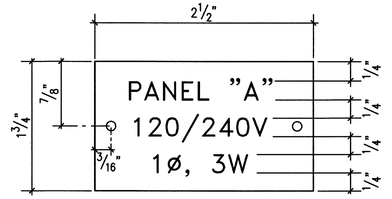

NOTES:

1. USE 2 PLY PLASTIC - BLACK, WHITE.
2. LETTER SIZE SHALL BE 1/2" HIGH AND ENGRAVED 1/16" WIDE, WHITE IN COLOR.
3. ATTACH TO EQUIPMENT ENCLOSURE WITH NO.7 STAINLESS STEEL DRIVE SCREWS.

E E-20 TYP PANEL I.D. TAG DETAIL
NOT TO SCALE

DRAWING REVIEW
Reviewed for HECO's Facilities Only
By
Date 12/13/12
Customer Installation Department
Hawaiian Electric Company, Inc.

HECO's review of these drawings shall in no way relieve the Customer, its Consultant, its Contractor or materials supplier acting on the Customer's behalf from the responsibility for engineering, design, materials and any other liability associated with this project.

REVISION DATE	DESCRIPTION	MADE BY	APPROVED

cp&e Community Planning and Engineering, Inc.
Engineering Design | Construction Management | Infrastructure Planning
1100 Alakea Street, 26th Floor Honolulu, Hawaii

EAST KAPOLEI II DEVELOPMENT INCREMENT 2B
HONOULIULI, EWA, OAHU, HAWAII
(DPP SUBD. FILE NO. 2011/SUB-155
OWNER & DEVELOPER: DEPARTMENT OF HAWAIIAN HOME LANDS
TAX MAP KEY: 9-1-17: Portion 110

METERING EQUIPMENT & CABINET DETAILS

DRAWN BY: CAD	ENGINEER: GF	CHECKED BY: GF

APPROVED:

HAWAIIAN ELECTRIC CO. DATE

DATE

DATE

DATE

GARY I. FUNASAKI LICENSED PROFESSIONAL ENGINEER No. 9195-E HAWAII, U.S.A.
13 NOV 2012
THIS WORK WAS PREPARED BY ME OR UNDER MY SUPERVISION. CONSTRUCTION OF THIS PROJECT WILL BE UNDER MY OBSERVATION. LICENSE EXPIRATION DATE: 04/30/14

FILE	POCKET	FOLDER	NO.

DWG. NO. E-20 SHEET 60 OF 78 SHEETS

LAST SAVE: 09/06/12 @ 11:01:18 BY: RN PLOT SC: 10.000000=10.000000
Z:\ACAD\PROJECTS\2b08a#1\E20_211068_Meter_DETAILS_one-line

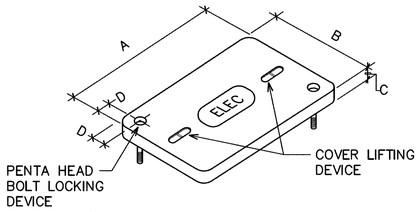

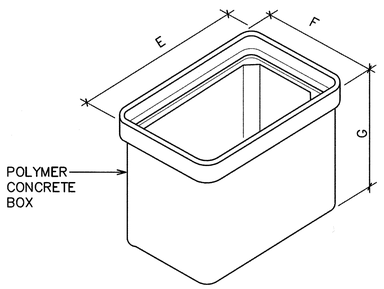

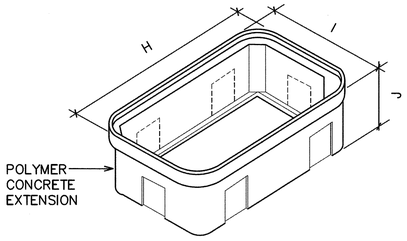

NOTES:

1. TO PROPERLY SECURE THE COVER, BE SURE THAT THE PENTAHEAD BOLTS ARE IN PLACE AND TIGHTENED. THE PENTA BOLTS SHALL BE FASTENED SECURELY TO THE COVERS (BY MEANS OF A COTTER PIN, FOR EXAMPLE), SO THE BOLTS CANNOT BE EASILY REMOVED FROM THE COVERS, EVEN WHEN THE COVERS ARE REMOVED FROM THE BOXES.
2. GROUND ROD SHALL BE INSTALLED IN THE CORNER, 6" FROM EACH WALL AND 6" ABOVE FINAL FLOOR GRADE.
3. NON-CONCRETE BOXES, COVERS, AND EXTENSIONS SHALL BE RATED FOR A VERTICAL LOAD OF 20,000 LBS (20K) MINIMUM.

NON-CONCRETE BOX SCHEDULE

ITEM	13" X 24" PULLBOX	17" X 30" PULLBOX	24" X 36" PULLBOX
A	$23\frac{1}{4}$	$30\frac{1}{2}$	$35\frac{5}{8}$
B	$13\frac{3}{4}$	$17\frac{1}{2}$	24
C	2	2	3
D	$1\frac{3}{4}$	$2\frac{1}{2}$	$2\frac{3}{4}$
E	$24\frac{1}{2}$	$31\frac{3}{4}$	$36\frac{7}{8}$
F	15	$18\frac{3}{4}$	$25\frac{1}{4}$
G	18	18	18
H	$29\frac{1}{4}$	$36\frac{1}{2}$	$41\frac{7}{8}$
I	$19\frac{3}{4}$	$23\frac{1}{2}$	$30\frac{1}{4}$
J	9	9	9

NOTE: ALL DIMENSIONS ARE IN INCHES & ARE NOMINAL.

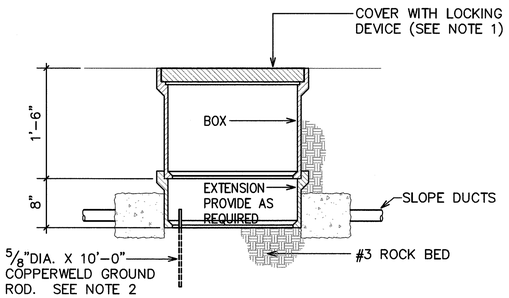

ELEVATION

A / E-21 NON-CONCRETE SECONDARY POWER PULLBOX DETAIL

NOT TO SCALE

KIM-AR SERIES

MANUF. CAT. NO.:
1A/AR3/70HPS120/DB/A-25
PRA14-4125/A/DBA

LUMINAIRE:
DIE CAST ALUM. HOUSING
THK. NOM., ONE-PIECE
SPECULAR ALZAK FIN.
REFLECTOR, CLEAR ANODIZED
PROTECTIVE UNDERCOAT WITH
PAINTED DARK BRONZE FINISH,
TYPE III DISTRIBUTION, 120V

BALLAST:
HIGH POWER FACTOR
BALLAST FOR 120V OPERATION

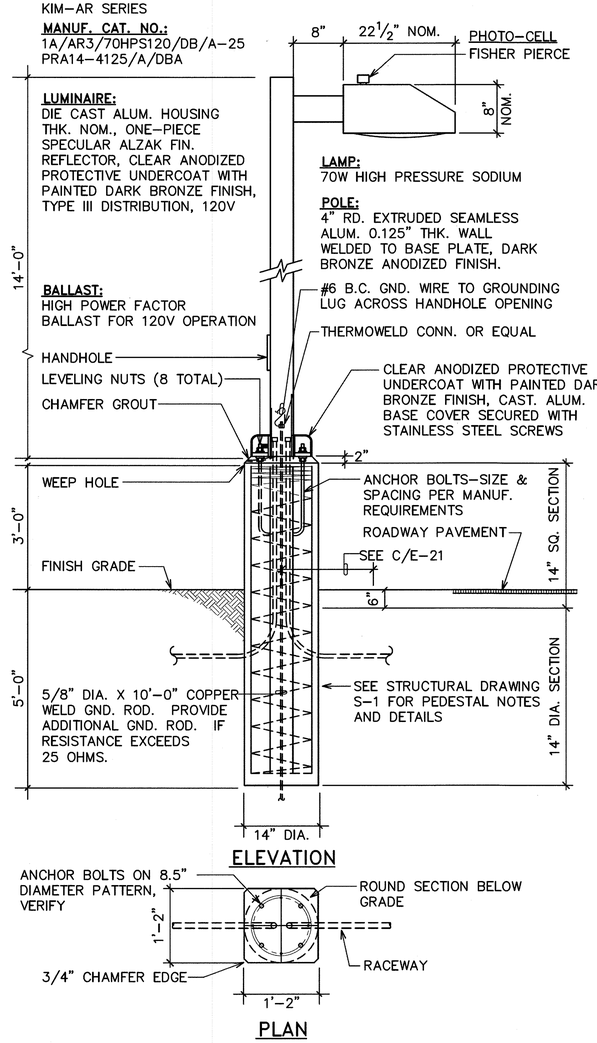

ELEVATION

PLAN

B / E-21 PARKING LOT LIGHT DETAIL

N.T.S.

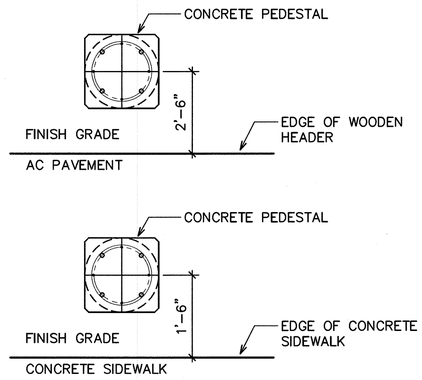

C / E-21 PARKING LIGHT LOCATION DETAIL

N.T.S.

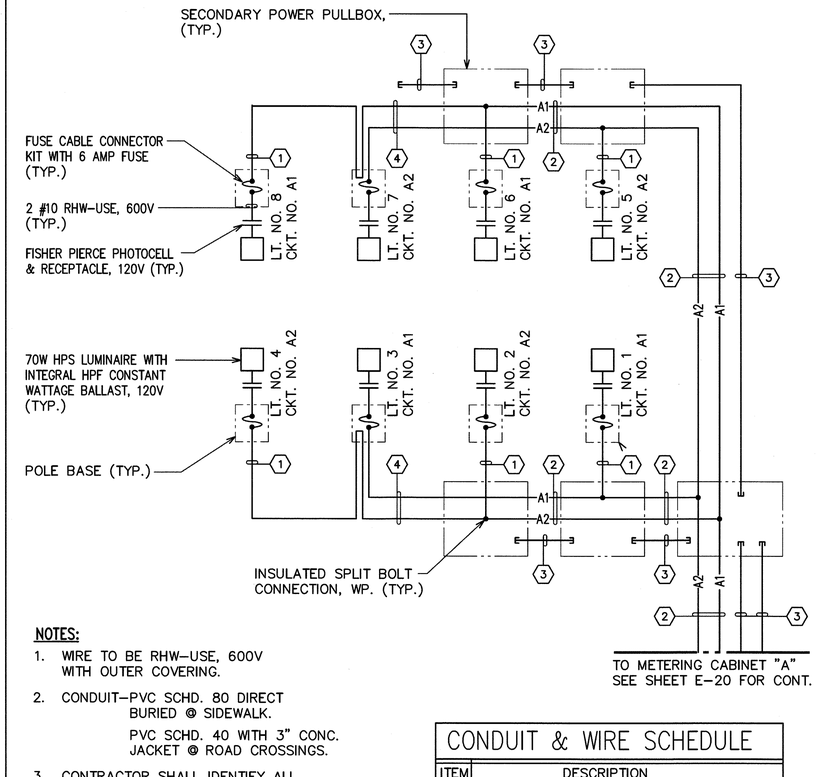

NOTES:

1. WIRE TO BE RHW-USE, 600V WITH OUTER COVERING.
2. CONDUIT-PVC SCHD. 80 DIRECT BURIED @ SIDEWALK.
   PVC SCHD. 40 WITH 3" CONC. JACKET @ ROAD CROSSINGS.
3. CONTRACTOR SHALL IDENTIFY ALL CIRCUIT CABLES WITH LEAD TAG IN EACH PULLBOX AS SHOWN.
   ALL NEUTRAL CONDUCTORS SHALL BE IDENTIFIED WITH WHITE INSULATION. OTHER MEANS OF IDENTIFICATION ARE NOT ACCEPTABLE.
5. INSTALL PULLBOXES ON 6" OF #3 CRUSHED ROCK BASE.
6. SEAL ALL CONDUIT ENDS WITH DUCT SEAL.

CONDUIT & WIRE SCHEDULE

ITEM	DESCRIPTION
1	$1\frac{1}{4}$"C, 2#10 RHW-USE, #10 GND
2	2"C, 3#10 RHW-USE, #10 GND
3	2"C (SPARE), PULLWIRE
4	$1\frac{1}{4}$"C, 3#10 RHW-USE, #10 GND

D / E-21 PARKING LIGHT CONNECTION DIAGRAM

NOT TO SCALE

DRAWING REVIEW
Reviewed for HECO's Facilities Only
Date 12/13/12 By
Customer Installation Department
Hawaiian Electric Company, Inc.

HECO's review of these drawings shall in no way relieve the Customer, its Consultant, its Contractor or anyone acting on the Customer's behalf from the responsibility for engineering, design, materials and any other liability associated with this project.

GARY I. FUNASAKI LICENSED PROFESSIONAL ENGINEER No. 7185-E HAWAII, U.S.A. 13 Nov 2012

THIS WORK WAS PREPARED BY ME OR UNDER MY SUPERVISION. CONSTRUCTION OF THIS PROJECT WILL BE UNDER MY OBSERVATION. LICENSE EXPIRATION DATE: 04/30/14

REVISION DATE	DESCRIPTION	MADE BY	APPROVED

cp&e Community Planning and Engineering, Inc.
Engineering Design | Construction Management | Infrastructure Planning
1100 Alakea Street, 26th Floor Honolulu, Hawaii

EAST KAPOLEI II DEVELOPMENT INCREMENT 2B
HONOULIULI, EWA, OAHU, HAWAII
(DPP SUBD. FILE NO. 2011/SUB-155
OWNER & DEVELOPER: DEPARTMENT OF HAWAIIAN HOME LANDS
TAX MAP KEY: 9-1-17: Portion 110

PARKING LOT LIGHT DETAILS & CONNECTION DIAGRAM

DRAWN BY: CAD	ENGINEER: GF	CHECKED BY: GF

APPROVED:

DATE DATE DATE DATE

FILE	POCKET	FOLDER	NO.

DWG. NO. **E-21** SHEET 61 OF 78 SHEETS

LAST SAVE: 09/06/12 @ 11:01:38 BY: RN PLOT SC: 12.000000=12.000000
Z:\ACAD\PROJECTS\2506#1\E21_211066_Misc-Det01

GENERAL NOTES

1. PROVIDE A MINIMUM OF ONE 16 X 2.5M COPPERWELD GROUND ROD IN EACH PULLBOX. WHEN DIRECTED BY THE TRAFFIC SIGNAL INSPECTOR/ENGINEER, INSTALL ADDITIONAL GROUND RODS. COST OF GROUND RODS SHALL BE INCIDENTAL TO THE PULLBOXES.
2. ALL PRE-CAST CONCRETE PULLBOXES SHALL BE MANUFACTURED IN TWO PIECES.
3. THE PULLBOX WITH COVER SHALL BE CAPABLE OF SUPPORTING AN MS 18 LOADING.
4. THE MAXIMUM WEIGHT OF THE PULLBOX COVER SHALL NOT EXCEED 27 KILOGRAMS.
5. THE OPENINGS FOR THE CONDUITS ON ALL PULLBOXES SHALL BE PRE-CAST CONCRETE KNOCKOUTS.
6. AFTER INSTALLING THE CONDUITS IN THE OPENINGS OF THE PULLBOXES, THE CONTRACTOR SHALL FILL THE EXCESS OPENING IN THE PRE-CAST KNOCKOUTS WITH CONCRETE MORTAR.
7. PRIOR TO INSTALLING THE PULLBOXES, THE CONTRACTOR SHALL LEVEL THE BOTTOM OF THE TRENCH AND ACHIEVE A MINIMUM OF 95% RELATIVE COMPACTION OF THE BOTTOM OF THE TRENCH.
8. ALL CONCRETE SHALL BE CLASS A (25MPA, MIN.)
9. REBARS SHALL BE GRADE 300 AND ALL LAPPED SPLICES SHALL BE 360MM MINIMUM.
10. THE #57 OR #67 SIZE AGGREGATE SHALL CONFORM TO LATEST VERSION OF AASHTO M43 (ASTM D 448).
11. TYPE "C" PULLBOX SHALL BE INSTALLED IN A LOCATION PROTECTED FROM VEHICULAR TRAFFIC (I.E. RAISED SIDEWALK, BEHIND A.C. CURBS, TRAFFIC SIGNAL STANDARD OR PIPE GUARDS).

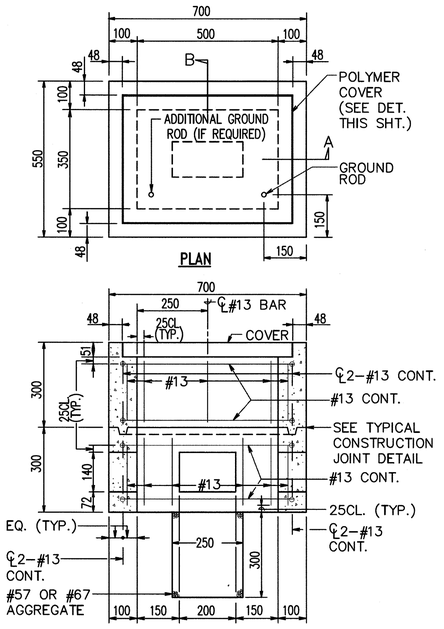

A E-22 TYPE "A" PULLBOX (OLD TYPE "B")
NOT TO SCALE

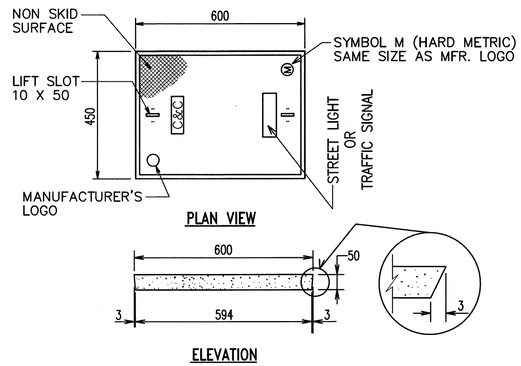

ALL DIMENSIONS ARE IN MILLIMETERS UNLESS OTHERWISE INDICATED

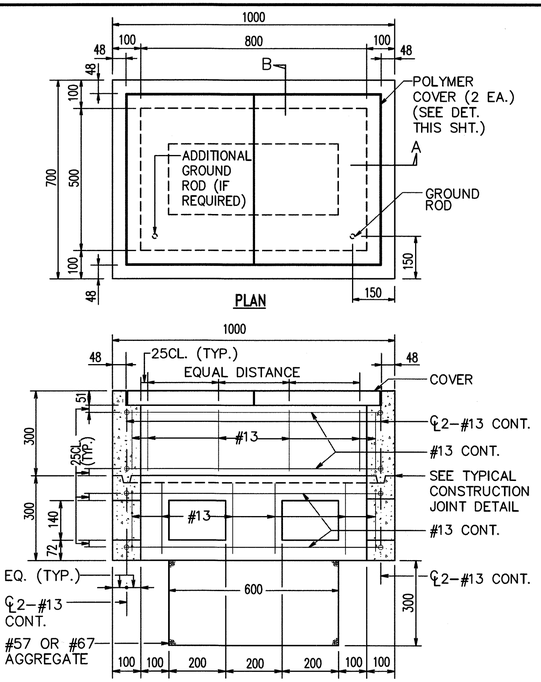

B E-22 TYPE "B" PULLBOX (OLD TYPE "C")
NOT TO SCALE

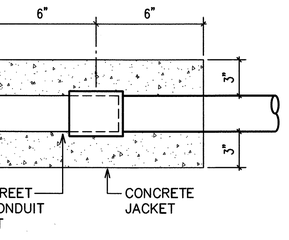

C E-22 TYP CONNECTION TO EXST CONDUIT STUBOUT DETAIL
NOT TO SCALE

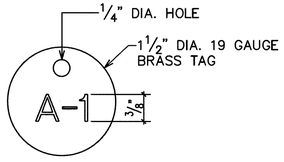

NOTES:

1. NUMBER SIZE SHALL BE 3/8" HIGH AND PUNCHED ON BRASS TAG.
2. ATTACH TO CIRCUIT CABLES WITH NYLON WEATHER RESISTANT LOCKING CABLE TIES, 3/16" WIDE.

D E-22 STREET LIGHT CIRCUIT CABLE I.D. TAG DETAIL
NOT TO SCALE

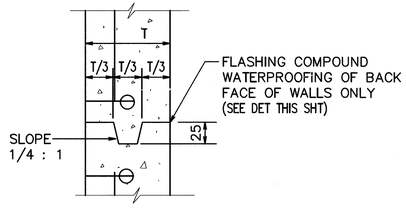

ALL DIMENSIONS ARE IN MILLIMETERS UNLESS OTHERWISE INDICATED

E E-22 TYPICAL CONSTRUCTION JOINT DETAIL
NOT TO SCALE

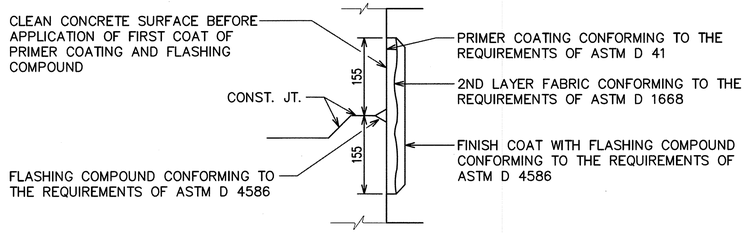

ALL DIMENSIONS ARE IN MILLIMETERS UNLESS OTHERWISE INDICATED

F E-22 TYPICAL FLASHING COMPOUND WATERPROOFING DETAILS
NOT TO SCALE

REVISION DATE	DESCRIPTION	MADE BY	APPROVED

cp&e Community Planning and Engineering, Inc.
Engineering Design | Construction Management | Infrastructure Planning
1100 Alakea Street, Sixth Floor Honolulu, Hawaii

EAST KAPOLEI II DEVELOPMENT INCREMENT 2B

HONOULIULI, EWA, OAHU, HAWAII
(DPP SUBD. FILE NO. 2011/SUB-155
OWNER & DEVELOPER: DEPARTMENT OF HAWAIIAN HOME LANDS
TAX MAP KEY: 9-1-17: Portion 110

STREET LIGHT & TRAFFIC SIGNAL PULLBOX DETAILS

DRAWN BY: CAD	ENGINEER: GF	CHECKED BY: GF

APPROVED:

DATE — CHIEF, TRAFFIC REVIEW BRANCH, D.P.P. DATE

1/28/13 — CHIEF, TRAFFIC SIGNALS AND TECHNOLOGY, D.T.S. DATE

1/31/2013 — CHIEF, MECHANICAL/ELECTRICAL DIVISION, D.D.C. DATE

GARY I. FUNASAKI LICENSED PROFESSIONAL ENGINEER No. 4185-E STATE OF HAWAII, U.S.A.

13 NOV 2012

THIS WORK WAS PREPARED BY ME OR UNDER MY SUPERVISION. CONSTRUCTION OF THIS PROJECT WILL BE UNDER MY OBSERVATION. LICENSE EXPIRATION DATE: 04/30/14

DWG. NO. E-22

SHEET 62 OF 78 SHEETS

FILE	POCKET	FOLDER	NO.

LAST SAVE: 09/06/12 @ 11:01:56 BY: RN PLOT SC: 1=0"=1"
Z:\CAD\PROJECTS\2008\EF\E22_2008EF.DWG2

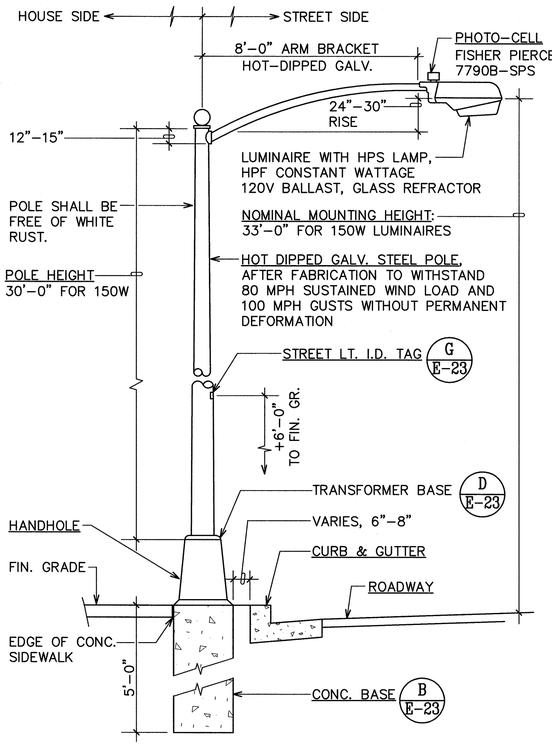

ELEVATION

A E-23 STREET LIGHT STANDARD
N.T.S. METERED SYSTEM

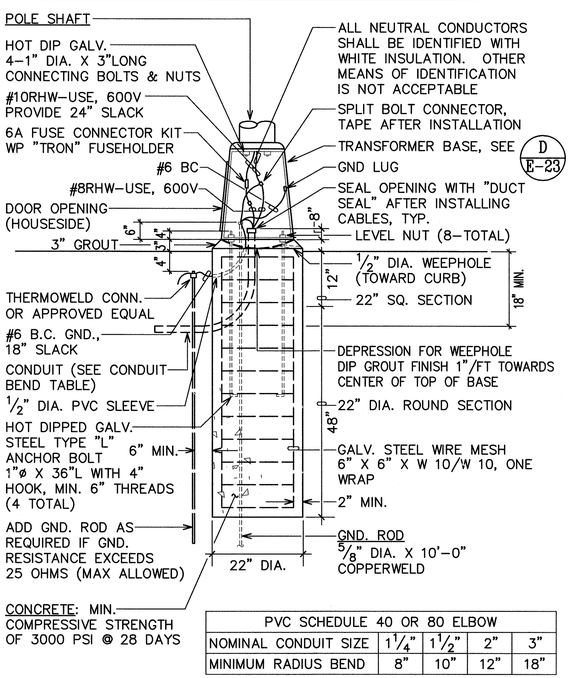

PVC SCHEDULE 40 OR 80 ELBOW				
NOMINAL CONDUIT SIZE	1 1/4"	1 1/2"	2"	3"
MINIMUM RADIUS BEND	8"	10"	12"	18"

B E-23 CONCRETE BASE ELEVATION
N.T.S.

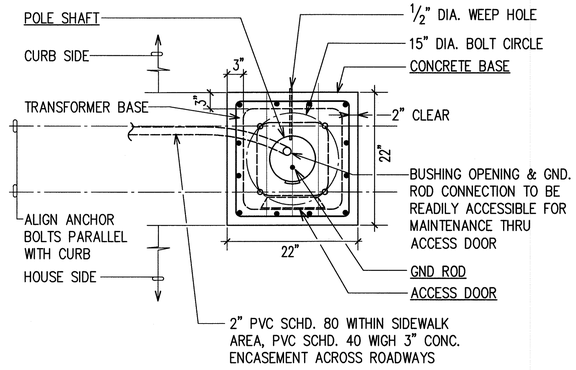

C E-23 CONCRETE BASE PLAN
N.T.S.

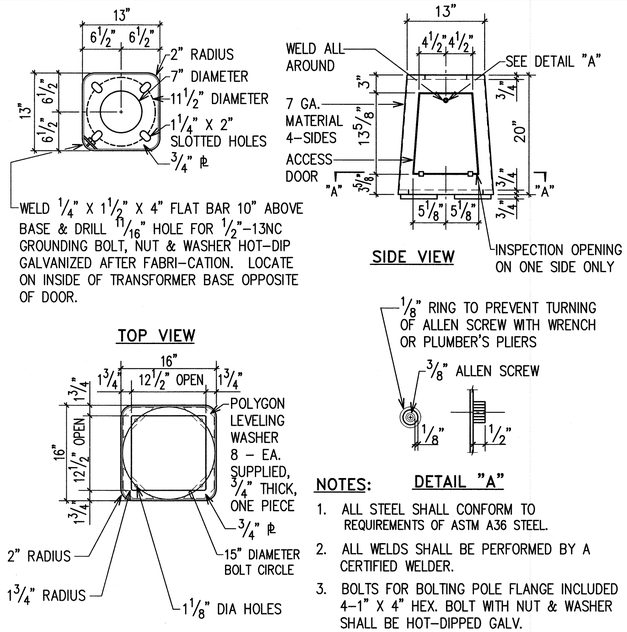

NOTES:
1. ALL STEEL SHALL CONFORM TO REQUIREMENTS OF ASTM A36 STEEL.
2. ALL WELDS SHALL BE PERFORMED BY A CERTIFIED WELDER.
3. BOLTS FOR BOLTING POLE FLANGE INCLUDED 4-1" X 4" HEX. BOLT WITH NUT & WASHER SHALL BE HOT-DIPPED GALV.
4. ENTIRE ASSEMBLY SHALL BE HOT-DIPPED GALV. AFTER FABRICATION.

D E-23 TRANSFORMER BASE DETAIL
N.T.S.

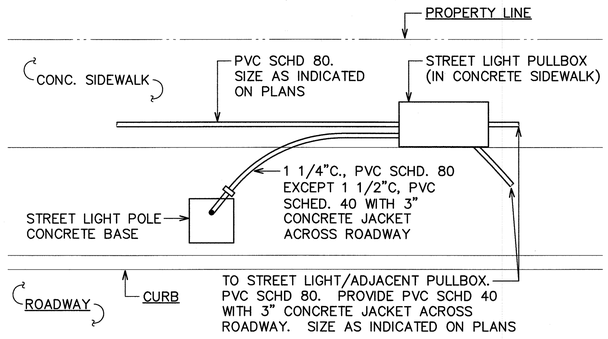

E E-23 TYPICAL STREET LIGHT/PULLBOX PLAN
NOT TO SCALE

NOTE:
ALL NEUTRAL CONDUCTORS SHALL BE IDENTIFIED WITH SOLID WHITE INSULATION. OTHER MEANS OF IDENTIFICATION ARE NOT ACCEPTABLE.

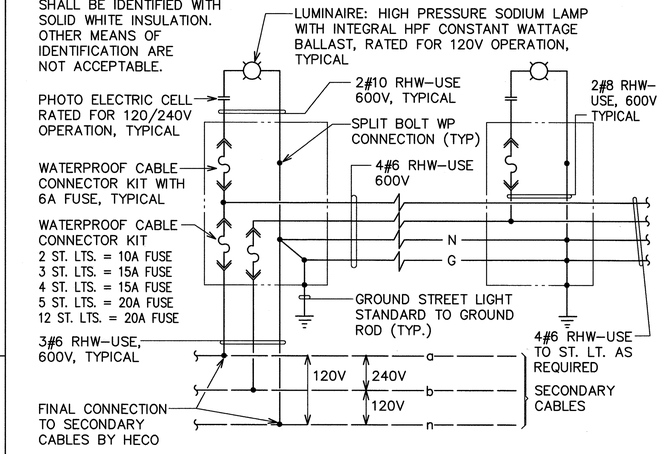

F E-23 STREET LIGHT MULTIPLE CONNECTION DIAGRAM

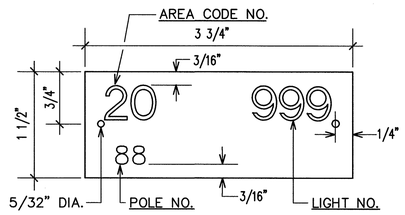

NOTES:
1. USE 3 PLY LAMINATED FLEXIBLE PLASTIC, BLACK-WHITE-BLACK THICKNESS: BLACK CAP SHEET-0.010", WHITE SHEET-0.052", BLACK BASE SHEET-0.010".
2. AREA CODE AND LIGHT NUMBER SHALL BE 5/8" HIGH, 1/8" STROKE, WHITE IN COLOR (NUMBER AS REQUIRED).
3. POLE NUMBER SHALL BE 1/4" HIGH, 1/16" STROKE, WHITE IN COLOR (NUMBER AS REQUIRED).
4. ATTACH TO STEEL POLES WITH NO. 8 STAINLESS STEEL, 1/2" LONG DRIVE SCREWS IN 1/8" DRILL HOLE.
5. NUMBERS ARE INSCRIBED BY CUTTING THROUGH "BLACK CAP SHEET" TO EXPOSE "WHITE" LETTERS.

G E-23 STREET LIGHT I.D. TAG DETAIL
NOT TO SCALE (MULTIPLE SYSTEM)

REVISION DATE	DESCRIPTION	MADE BY	APPROVED

cp&e Community Planning and Engineering, Inc.
Engineering Design | Construction Management | Infrastructure Planning
1100 Alakea Street, 26th Floor Honolulu, Hawaii

EAST KAPOLEI II DEVELOPMENT INCREMENT 2B

HONOULIULI, EWA, OAHU, HAWAII
(DPP SUBD. FILE NO. 2011/SUB-155
OWNER & DEVELOPER: DEPARTMENT OF HAWAIIAN HOME LANDS
TAX MAP KEY: 9-1-17: Portion 110

STREET LIGHT DETAILS I

DRAWN BY: CAD	ENGINEER: GF	CHECKED BY: GF

APPROVED:

DATE — CHIEF, TRAFFIC REVIEW BRANCH, DPP DATE

DATE — CHIEF, MECHANICAL/ELECTRICAL DIVISION, D.D.C. DATE

GARY I. FUNASAKI LICENSED PROFESSIONAL ENGINEER No. 4195-E HAWAII, U.S.A.
13 Nov 2013
THIS WORK WAS PREPARED BY ME OR UNDER MY SUPERVISION. CONSTRUCTION OF THIS PROJECT WILL BE UNDER MY OBSERVATION. LICENSE EXPIRATION DATE: 04/30/14

FILE	POCKET	FOLDER	NO.

DWG. NO. E-23 SHEET 63 OF 78 SHEETS

LAST SAVE: 02/01/13 @ 08:54:24 BY: RN PLOT SC: 1'-0"=1"
Z:\CAD\PROJECTS\2008\08-235-2B\DWG\E-23-2B01.dwg

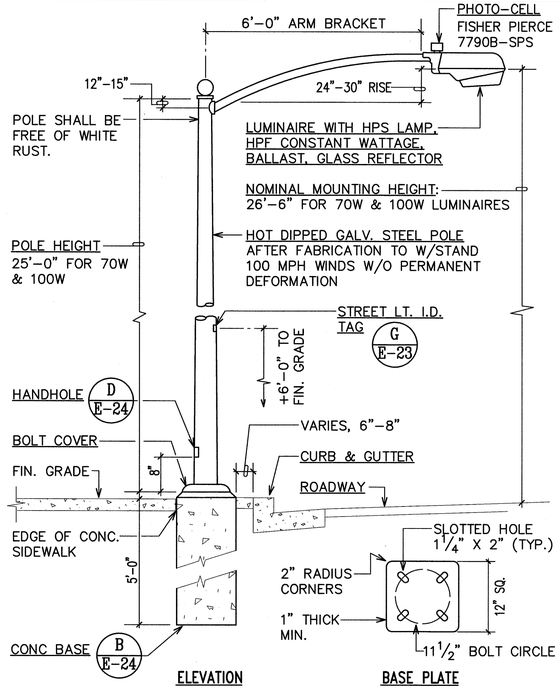

A E-24 **STREET LIGHT STANDARD**
NOT TO SCALE

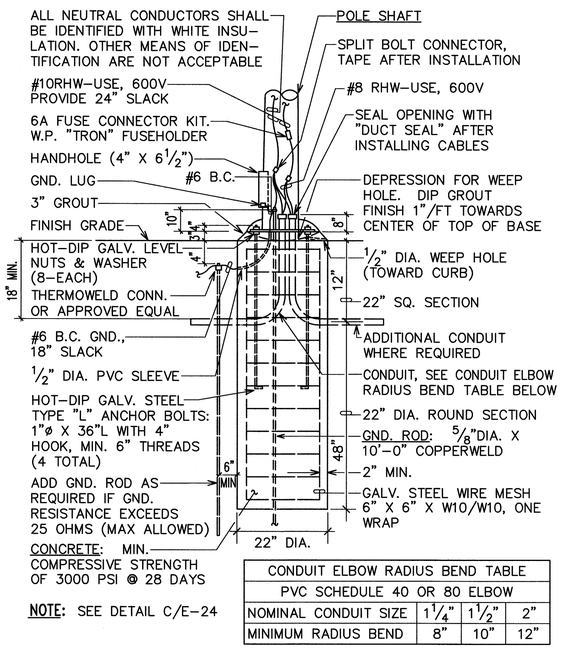

CONDUIT ELBOW RADIUS BEND TABLE			
PVC SCHEDULE 40 OR 80 ELBOW			
NOMINAL CONDUIT SIZE	1 1/4"	1 1/2"	2"
MINIMUM RADIUS BEND	8"	10"	12"

NOTE: SEE DETAIL C/E-24

B E-24 **CONCRETE BASE ELEVATION**
NOT TO SCALE

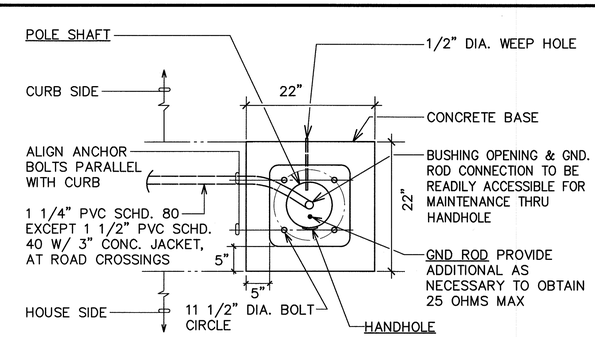

C E-24 **CONCRETE BASE PLAN**
NOT TO SCALE

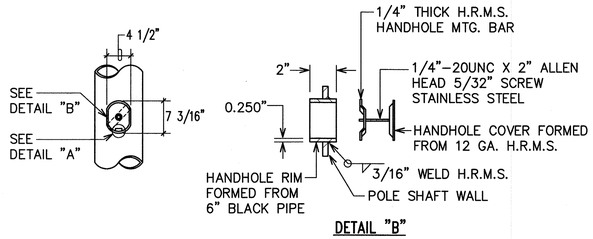

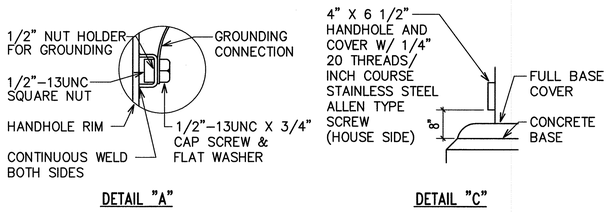

D E-24 **STREET LIGHT STANDARD HANDHOLE DETAILS**
NOT TO SCALE

STREET LIGHTING NOTES:

1. STREET LIGHT SYSTEM FOR THIS SUBDIVISION TO BE UNDER HAWAIIAN ELECTRIC COMPANY INC. (HECO) AREA CODE NO. 20 (MULTIPLE SYSTEM)
2. STREET LIGHT NUMBERS FOR THIS SUBDIVISION TO BE 4958 TO 5035, INCLUSIVELY (MULTIPLE SYSTEM).
3. ALL SECONDARY FEEDER EXTENSIONS TO HECO SECONDARY CABLES TO BE PROVIDED BY THE CONTRACTOR. CONNECTIONS THERETO SHALL BE BY HECO, & PAID FOR BY THE CONTRACTOR.
4. PRIOR TO THE INSTALLATION OF HECO. SECONDARY CABLES, CONTRACTOR SHALL COORDINATE & INFORM HECO OF PROJECT STREET LIGHT LOCATIONS.
5. CONTRACTOR TO NOTIFY & COORDINATE WORK WITH MECHANICAL/ELECTRICAL DIVISION, DEPARTMENT OF DESIGN & CONSTRUCTION, 3 WORKING DAYS IN ADVANCE OF COMMENCING INSTALLATION OF STREET LIGHT SYSTEM (PHONE 768-8431).
6. LUMINAIRES TO BE HIGH PRESSURE SODIUM (HPS) TYPE WITH I.E.S. TYPE II LIGHT DISTRIBUTION EXCEPT AS NOTED ON PLAN, WATTAGES TO BE AS INDICATED ON THE PLANS.
7. TYPICAL CONSTRUCTION DETAILS TO BE PER THIS SHEET & APPLICABLE STANDARD DETAILS OF THE MECHANICAL/ELECTRICAL DIVISION, DEPARTMENT OF DESIGN AND CONSTRUCTION.
8. ON BOTTOM OF PHOTO-CELL, CONTRACTOR SHALL STENCIL THE DATE OF INSTALLATION.
9. LUMINAIRE & POLE COUNT:

POLES:	25'-0"	= 72
	30'-0"	= 6
LUMINAIRES:	70W	= 57
	100W	= 15
	150W	= 6

10. AT ALL TIMES DURING CONSTRUCTION PERIOD, CONTRACTOR SHALL MAINTAIN ONE SET OF APPROVED PLANS AT THE PROJECT SITE.
11. THE CONTRACTOR SHALL MEASURE AND RECORD THE GROUND RESISTANCE AT EACH STANDARD WITH NO EXTERNAL GROUND WIRES CONNECTED TO THE GROUND ROD. CONTRACTOR SHALL SCHEDULE GROUND RESISTANCE MEASUREMENTS 48 HOURS IN ADVANCE AND SHALL NOT PROCEED WITH MEASUREMENTS UNTIL APPROVAL IS GRANTED. SCHEDULES ARE SUBJECT TO CHANGE DEPENDING UPON WEATHER CONDITIONS. REPORTS SHALL INCLUDE NAME OF PERSONNEL CONDUCTING THE TEST, METER TYPE AND SERIAL NUMBER, DATE OF TEST AND SOIL CONDITIONS. TEST RESULTS SHALL BE CERTIFIED BY THE CONTRACTOR AND SUBMITTED TO THE CITY.
12. CONTRACTOR SHALL ARRANGE FOR HECO TO ENERGIZE STREET LIGHTS A MINIMUM OF SIX HOURS BEFORE FINAL INSPECTION & ACCEPTANCE. CONTRACTOR TO PAY FOR ALL COSTS, 6 HOURS BEFORE & DURING INSPECTION.
13. FINAL ACCEPTANCE AND INSPECTION WILL BE UNDERTAKEN ONLY AFTER ALL WORK HAS BEEN COMPLETED & THE "AS-BUILT" VELLUM TRACINGS HAVE BEEN RECEIVED BY THE CITY & COUNTY OF HONOLULU, DEPARTMENT OF DESIGN & CONSTRUCTION.
14. UPON COMPLETION OF FINAL INSPECTION BY ENGINEER & THE CITY & COUNTY, CONTRACTOR SHALL OBTAIN WRITTEN ACCEPTANCE OF STREET LIGHT SYSTEM FROM THE MECHANICAL/ELECTRICAL DIVISION, DEPARTMENT OF DESIGN & CONSTRUCTION, CITY AND COUNTY OF HONOLULU.
15. CONTRACTOR SHALL NOT BACKFILL TRENCHES UNTIL WORK IS APPROVED BY THE STREET LIGHT INSPECTOR.
16. THE CONTRACTOR SHALL INFORM THE STREET LIGHT INSPECTOR OF ALL CONCRETE POURS AT LEAST 2 WORKING DAYS IN ADVANCE. CONCRETE SHALL NOT BE POURED UNTIL APPROVAL IS GRANTED BY THE CITY AND COUNTY STREET LIGHT INSPECTOR.
17. SUBMIT SHOP DRAWINGS FOR ALL STREET LIGHT COMPONENTS INCLUDING PULLBOXES FOR APPROVAL.

REVISION DATE	DESCRIPTION	MADE BY	APPROVED

cp&e **Community Planning and Engineering, Inc.**
Engineering Design | Construction Management | Infrastructure Planning
1100 Alakea Street, 26th Floor, Honolulu, Hawaii

EAST KAPOLEI II DEVELOPMENT INCREMENT 2B

HONOULIULI, EWA, OAHU, HAWAII
(DPP SUBD. FILE NO. 2011/SUB-155
OWNER & DEVELOPER: DEPARTMENT OF HAWAIIAN HOME LANDS
TAX MAP KEY: 9-1-17: Portion 110

STREET LIGHT DETAILS II

DRAWN BY: CAD	ENGINEER: GF	CHECKED BY: GF

APPROVED:

DATE — CHIEF, TRAFFIC REVIEW BRANCH, D.P.P. — DATE

DATE — CHIEF, MECHANICAL/ELECTRICAL DIVISION, D.D.C. — 2/4/2013 — DATE

GARY I. FUNASAKI LICENSED PROFESSIONAL ENGINEER No. 4196-E HAWAII, U.S.A.
13 NOV 2013
THIS WORK WAS PREPARED BY ME OR UNDER MY SUPERVISION. CONSTRUCTION OF THIS PROJECT WILL BE UNDER MY OBSERVATION. LICENSE EXPIRATION DATE: 04/30/14

FILE	POCKET	FOLDER	NO.

DWG. NO. **E-24** SHEET 64 OF 78 SHEETS

LAST SAVE: 02/01/13 @ 08:54:38 BY: RN PLOT SC 12.000000=12.000000
Z:\CAD\PROJECTS\2058A\E24-2958A-SELE-04.02

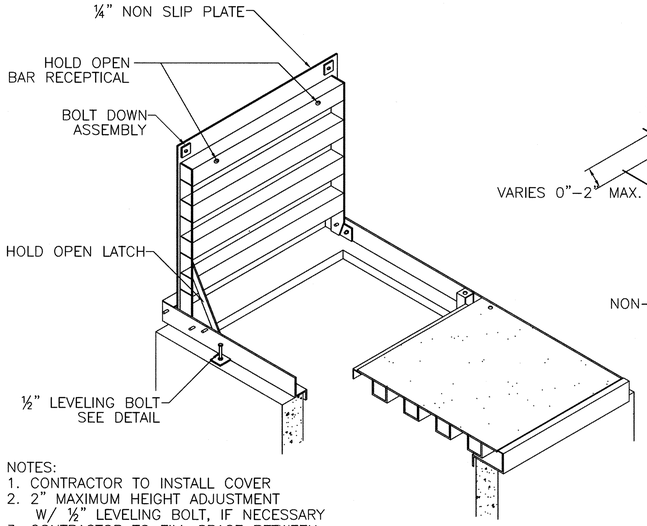

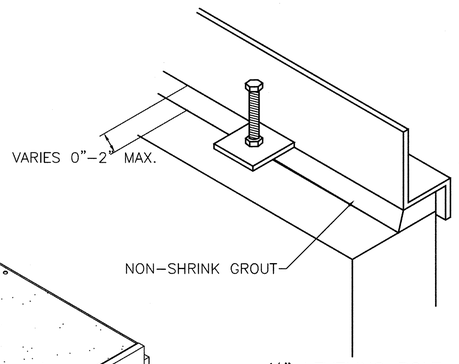

NOTES:
1. CONTRACTOR TO INSTALL COVER
2. 2" MAXIMUM HEIGHT ADJUSTMENT W/ ½" LEVELING BOLT, IF NECESSARY
3. CONTRACTOR TO FILL SPACE BETWEEN COVER & TOP OF WALL W/ NON–SHRINK GROUT AFTER ADJUSTMENT.

HAWAII PRECAST, INC.
P.O. BOX 160 KAILUA–KONA, HI 96745
Ph: (808) 326–7730 Fax: (808) 329–9026

3x5 HANDHOLE COVER

SCALE: NONE | DRAWN BY: | CHECKED BY:
DATE: 08/15/08 | SHEET: 2 OF 3

UH 3x5 COVER

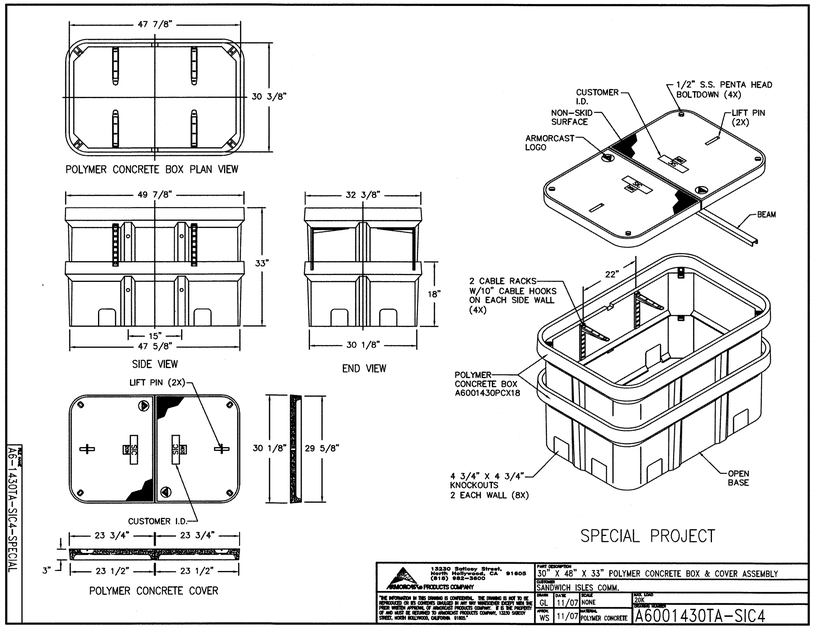

A6-1430TA-SIC4-SPECIAL

13330 Gaffney Street, Whittier, CA 90605 (562) 945-4000
ARMORCAST PRODUCTS COMPANY

THE INFORMATION IN THIS DRAWING IS CONFIDENTIAL. THE DRAWING IS NOT TO BE REPRODUCED OR DISCLOSED, EXCEPT AS PER ARMORCAST'S EXPRESS WRITTEN PERMISSION. ANY UNAUTHORIZED USE OR DISCLOSURE OF ARMORCAST PRODUCTS COMPANY IS A VIOLATION OF THE PROPRIETARY RIGHTS OF ARMORCAST PRODUCTS COMPANY. IT IS THE PROPERTY OF ARMORCAST PRODUCTS COMPANY, 13330 GAFFNEY STREET, WHITTIER, CALIFORNIA 90605.

Part Description: 30" X 48" X 33" POLYMER CONCRETE BOX & COVER ASSEMBLY
Customer: SANDWICH ISLES COMM.

DRWN	DATE	SCALE	DATE
GL	11/07	NONE	
APPD.	DATE	MATERIAL	CODE / STAMP
WS	11/07	POLYMER CONCRETE	A6001430TA-SIC4

UHC 30x48x33

	WEIGHT (lbs.)	CONCRETE (C.Y.)
BASE	3,900	0.87
ROOF	1,800	0.38
RISER	600	0.15

REINFORCING = 163 lbs. (#4)
65 lbs. (#5)
60 lbs. (#6)
1" RAMNEK = 13 ea.

NOTES:
1. CONCRETE SHALL HAVE A COMPRESSIVE STRENGTH OF 5,000 P.S.I. AT 28 DAYS.
2. ALL REINFORCING STEEL SHALL BE NEW STOCK DEFORMED BARS CONFORMING TO ASTM A706W GRADE 60 UNLESS OTHERWISE NOTED. PLACEMENT OF REBARS SHALL BE IN ACCORDANCE WITH ACI–315 & ACI–318. ALL BARS SHALL BE CLEAN OF RUST, GREASE OR OTHER MATERIALS LIKELY TO IMPAIR BOND. ALL BENDS SHALL BE MADE COLD.
3. ALL REINFORCING BARS SHALL BE ACCURATELY & SECURELY PLACED. ALL REINFORCING SHALL BE LAPPED 40 BAR DIAMETERS OR EIGHTEEN (18) INCHES, WHICHEVER IS GREATER AT SPLICES. ALL SPLICES SHALL BE MADE AWAY FROM POINT OF MAXIMUM STRESS.
4. CONCRETE COVER TO REINFORCING STEEL SHALL BE 1–1/2" MINIMUM.
5. ALLOW CONCRETE TO CURE A MINIMUM OF 7 DAYS PRIOR TO SHIPPING.
6. STRUCTURAL DESIGN CRITERIA:
   A. AASHTO HS20–44 LOADING
   B. ACTIVE EARTH PRESSURE ABOVE THE WATER TABLE = 40 PCF
   C. SOIL UNIT WEIGHT = 110 PCF
7. MANHOLE SHALL NOT BE PLACED BELOW THE WATER TABLE.

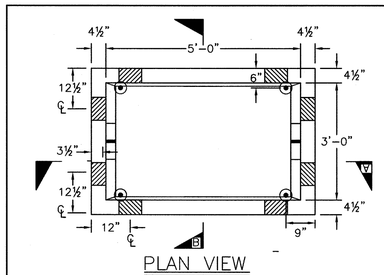

PLAN VIEW

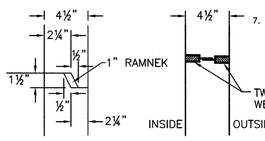

JOINT DETAIL
NTS

GROUND
NTS

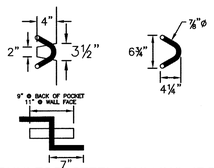

STAINLESS STEEL PULLING IRON
SCALE:¾"=1'–0"

3X5 SIC MANHOLE BOTTOM

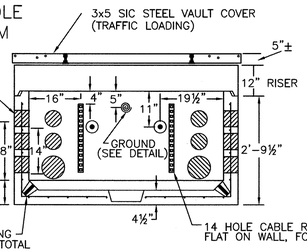

SECTION A

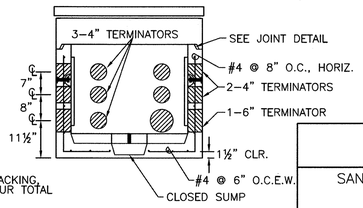

SECTION B

HAWAII PRECAST, INC.
P.O. BOX 160 KAILUA–KONA, HI 96745
Ph: (808) 326–7730 Fax: (808) 329–9026

SANDWICH ISLES COMMUNICATIONS, INC.
3'0" X 5'0" HANDHOLE

SCALE: ½"=1'–0" | DRAWN BY: | CHECKED BY:
DATE: 11/10/00REV. | SHEET: 1 OF 1

UH 3x5

FOR REFERENCE ONLY

REVISION DATE	DESCRIPTION	MADE BY	APPROVED

cp&e Community Planning and Engineering, Inc.
Engineering Design | Construction Management | Infrastructure Planning
1100 Alakea Street, 26th Floor Honolulu, Hawaii

EAST KAPOLEI II DEVELOPMENT INCREMENT 2B
HONOULIULI, EWA, OAHU, HAWAII
(DPP SUBD. FILE NO. 2011/SUB-155
OWNER & DEVELOPER: DEPARTMENT OF HAWAIIAN HOME LANDS
TAX MAP KEY: 9-1-17: Portion 110

SIC REFERENCE DRAWINGS

DRAWN BY: CAD | ENGINEER: GF | CHECKED BY: GF
APPROVED:

DATE | DATE
SANDWICH ISLES COMMUNICATIONS, INC. DATE 11/9/12 | DATE

THIS WORK WAS PREPARED BY ME OR UNDER MY SUPERVISION. CONSTRUCTION OF THIS PROJECT WILL BE UNDER MY OBSERVATION. LICENSE EXPIRATION DATE: 04/30/14

DWG. NO. E-25
SHEET 65 OF 78 SHEETS

FILE	POCKET	FOLDER	NO.

LAST SAVE: 09/06/12, 8:11:03:53 PM, PLOT: 9/11/12 1:47:41 PM
Z:\CAD\PROJECTS\2B\MAP\EZ3_2B1MF_#4SHEET.MRK, A6-1430TA-SIC4 (UH3X5 COVER UH3X5 BOX (NEW)

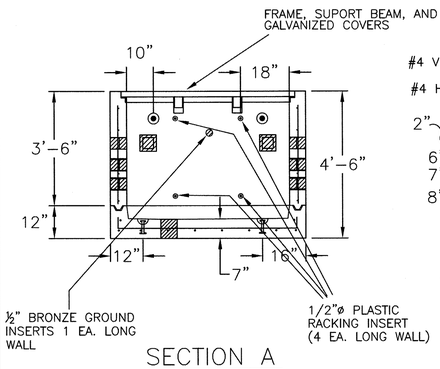

SECTION A

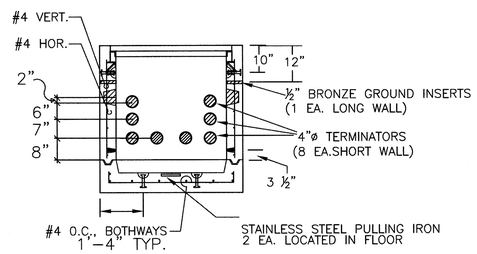

SECTION B

WT. OF WALL AND FRAME 5093 LBS

WT. OF WALL 4785 LBS.

WT. OF BASE 2,921 LBS.

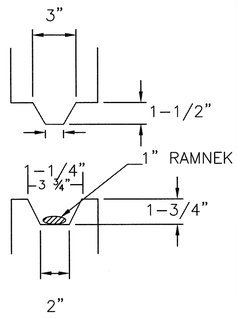

DETAIL OF JOINT

SCALE: 2"=1'-0"

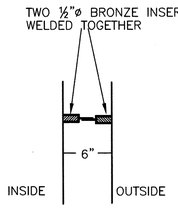

GROUND

NTS

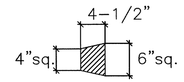

KNOCKOUTS

NTS

HAWAII PRECAST, INC. P.O. BOX 160 KAILUA-KONA, HI 96745 Ph: (808) 326-7730 Fax: (808) 329-9026		
4 X 6 S.I.C. HANDHOLE		
SCALE: 3/8"=1'-0" DATE: 03-29-06	DRAWN BY:	CHECKED BY:
	SHEET: 2 OF 2	

NOTES:

1. CONCRETE TO BE DESIGNED IN ACCORDANCE WITH AASHTO H-20-44 TRAFFIC BRIDGE LOADING USING 5,500 PSI COMPRESSIVE CONCRTE, CONCRETE SHALL HAVE A COMPRESSIVE STRENGTH OF 5,500 PSI @ 28 DAYS

2. ALL REINFORCING STEEL SHALL BE NEW STOCK DEFORMED BARS CONFORMING TO THE HANDHOLE MANUFACTURERS SPECIFICATIONS. ALL BARS SHALL BE CLEAN OF RUST, GREASE OR OTHER MATERIALS LIKELY TO IMPAIR BOND. ALL BENDS SHALL BE MADE COLD

3. ALL REINFORCING BARS SHALL BE ACCURATELY & SECURELY PLACED. ALL REINFORCING BARS SHALL BE LAPPED 40 BAR DIAMETERS OR EIGHTEEN(18) INCHES, WHICHEVER IS GREATER AT SPLICES. ALL SPLICES SHALL BE MADE AWAY FROM POINT OF MAXIMUM STRESS.

4 CONCRETE COVER TO REINFORCING STEEL SHALL BE 1 ½" MINIMUM.

5. COVER TO BE DESIGNED FOR H-20-44 TRAFFIC BRIDGE LOADING CONSISTING OF CAST IN PLACE GALVANIZED FRAME AND SIX (6) EA. 2'X2' GALVANIZED SLIP-NOT COVERS WITH "SIC" LOGO WELDED ON TOP.

6. FOUR INCH (4") TERMINATORS AS FOLLOWS: SIX (6) PER SHORT WALL ON MIDDLE SECTION OF BOX AS INDICATED ON DRAWING.

7. 6"X6" KNOCKOUTS AS FOLLOWS: TWO (2) PER LONG WALL AS INDICATED ON DRAWING.

8. STAINLESS STEEL PULLING IRONS, LOCATED AS INDICTED ON DRAWING.

9. ½"X2" BRONZE INSERTS PLACED AND WELDED TOGETHER FOR GROUNDING AS INDICTED ON GROUNDING DETAIL. GROUNDING BOLTS ARE TO BE PROVIDED WITH BOX.

10. ½" PLASTIC RACKING INSERTS TO BE INCLUDED AS FOLLOWS: FOUR (4) PER LONG WALL WITH 21" SPACING AS SHOWN ON DRAWING.

11. HANDHOLE TO BE PLACED ON A SIX INCH (6") BASE OF CRUSHED GRAVEL FOR EVEN LOAD DISTRIBUTION AND EASE OF INSTALLATION.

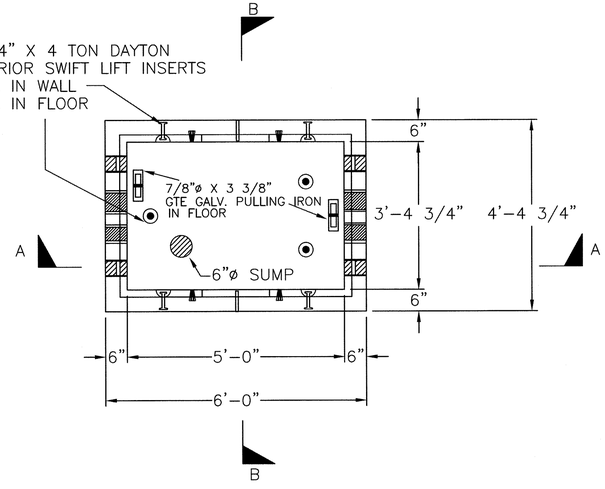

PLAN VIEW

HAWAII PRECAST, INC. P.O. BOX 160 KAILUA-KONA, HI 96745 Ph: (808) 326-7730 Fax: (808) 329-9026		
4 X 6 S.I.C. HANDHOLE		
SCALE: 1/2"=1'-0" DATE: 03-29-06	DRAWN BY:	CHECKED BY:
	SHEET: 1 OF 2	

UH 4x6

FOR REFERENCE ONLY

REVISION DATE	DESCRIPTION	MADE BY	APPROVED

cp&e **Community Planning and Engineering, Inc.**
Engineering Design | Construction Management | Infrastructure Planning
1100 Alakea Street, Sixth Floor Honolulu, Hawaii

EAST KAPOLEI II DEVELOPMENT INCREMENT 2B

HONOULIULI, EWA, OAHU, HAWAII
(DPP SUBD. FILE NO. 2011/SUB-155
OWNER & DEVELOPER: DEPARTMENT OF HAWAIIAN HOME LANDS
TAX MAP KEY: 9-1-17: Portion 110

SIC REFERENCE DRAWINGS

DRAWN BY: CAD	ENGINEER: GF	CHECKED BY: GF

APPROVED:

DATE

THIS WORK WAS PREPARED BY ME OR UNDER MY SUPERVISION. CONSTRUCTION OF THIS PROJECT WILL BE UNDER MY OBSERVATION. LICENSE EXPIRATION DATE: 04/30/14

SANDWICH ISLES COMMUNICATIONS, INC. DATE 12/19/12 DATE

DWG. NO. **E-26**

SHEET 66 OF 78 SHEETS

FILE	POCKET	FOLDER	NO.

LAST SAVE: 09/06/12 @ 11:53:10 PM BY DLOT 50"x 1"=1'-0"
L:\KAKAAKO\2005\126MF\CAD_SITE\MF_HH4X6_SIC_HANDHOLE_F2.DWG XREFS: 4X6_SIC_HANDHOLE_F1REV1

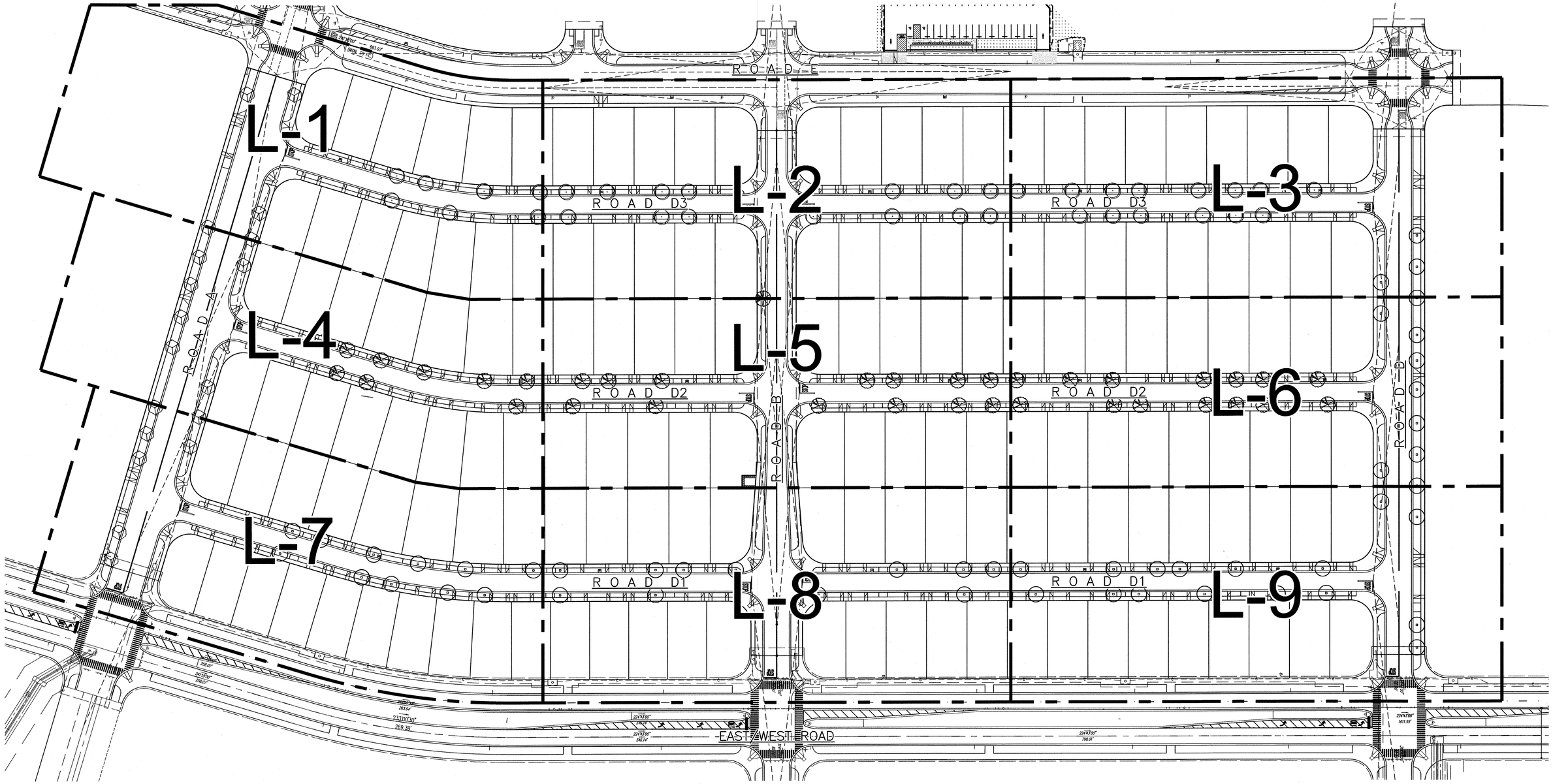
L-1
L-2
L-3
L-4
L-5
L-6
L-7
L-8
L-9
ROAD E
ROAD D3
ROAD D3
ROAD A
ROAD D2
ROAD D2
ROAD B
ROAD D
ROAD D1
ROAD D1
EAST-WEST ROAD
AGS
AGS
AGS

SEASHORE PASPALUM
TYP. SYM.

RAINBOW SHOWER
TYP. SYM.

ROOT BARRIER
TYP. SYM.

REMOVE EXIST. BARRICADES AND "ROAD CLOSED" SIGN

CENTERLINE & STOP BAR SEE DET., DWG. NO. C-31

4" DOUBLE SOLID YELLOW LINE W/ TYPE "D" REFLECTIVE MARKERS @ 20' O.C.

INSTALL ON POST

INSTALL STREET NAME SIGN AND POST

INSTALL ON ST. LT. POLE

HERE TO CORNER

INSTALL ON POST

TYPE "DB" HYDRANT MARKER

CORNER TO HERE

INSTALL ON POST

INSTALL ON ST. LT. POLE

SPEED LIMIT 25

INSTALL ON POST

INSTALL ON POST

INSTALL ON ST. LT. POLE

TULIPWOOD
TYP. SYM.

MATCHLINE: SEE SHEET L-2

MATCHLINE: SEE SHEET L-4

ROAD E

ROAD D

ROAD A

78'

48'

D24

D18

D16

SIC

W16

SL

E

T

R. STAN DUNCAN
LICENSED PROFESSIONAL LANDSCAPE ARCHITECT
No. 5815
HAWAII, U.S.A.

SIGNATURE EXPIRATION DATE OF LICENSE

THIS WORK WAS PREPARED BY ME OR UNDER MY SUPERVISION AND CONSTRUCTION OF THIS PROJECT WILL BE UNDER MY OBSERVATION

REVISION DATE	DESCRIPTION	MADE BY	APPROVED

cpe Community Planning and Engineering, Inc.
Engineering Design | Construction Management | Infrastructure Planning
1100 Alakea Street, 6th Floor Honolulu, Hawaii

EAST KAPOLEI II DEVELOPMENT INCREMENT 2B

HONOULIULI, EWA, OAHU, HAWAII
(DPP SUBD. FILE NO. 2011/SUB-155)
OWNER & DEVELOPER: DEPARTMENT OF HAWAIIAN HOME LANDS
TAX MAP KEY: 9-1-17: Portion 110

PLANTING PLAN 1

DRAWN BY: CB	ENGINEER: SD	CHECKED BY: RH

APPROVED:

CHIEF, URBAN DESIGN BRANCH D.P.P. DATE 4/5/13

GRAPHIC SCALE: 1" = 20'-0"
0 5 10 20 40

PBR HAWAII & ASSOCIATES, INC.

DWG. NO. L-1

SHEET 68 OF 78 SHEETS

FILE	POCKET	FOLDER	NO.

P:\PROJECTS\OAHU\Kapolei\East Kapolei phase 2B\CD\L-1.dwg

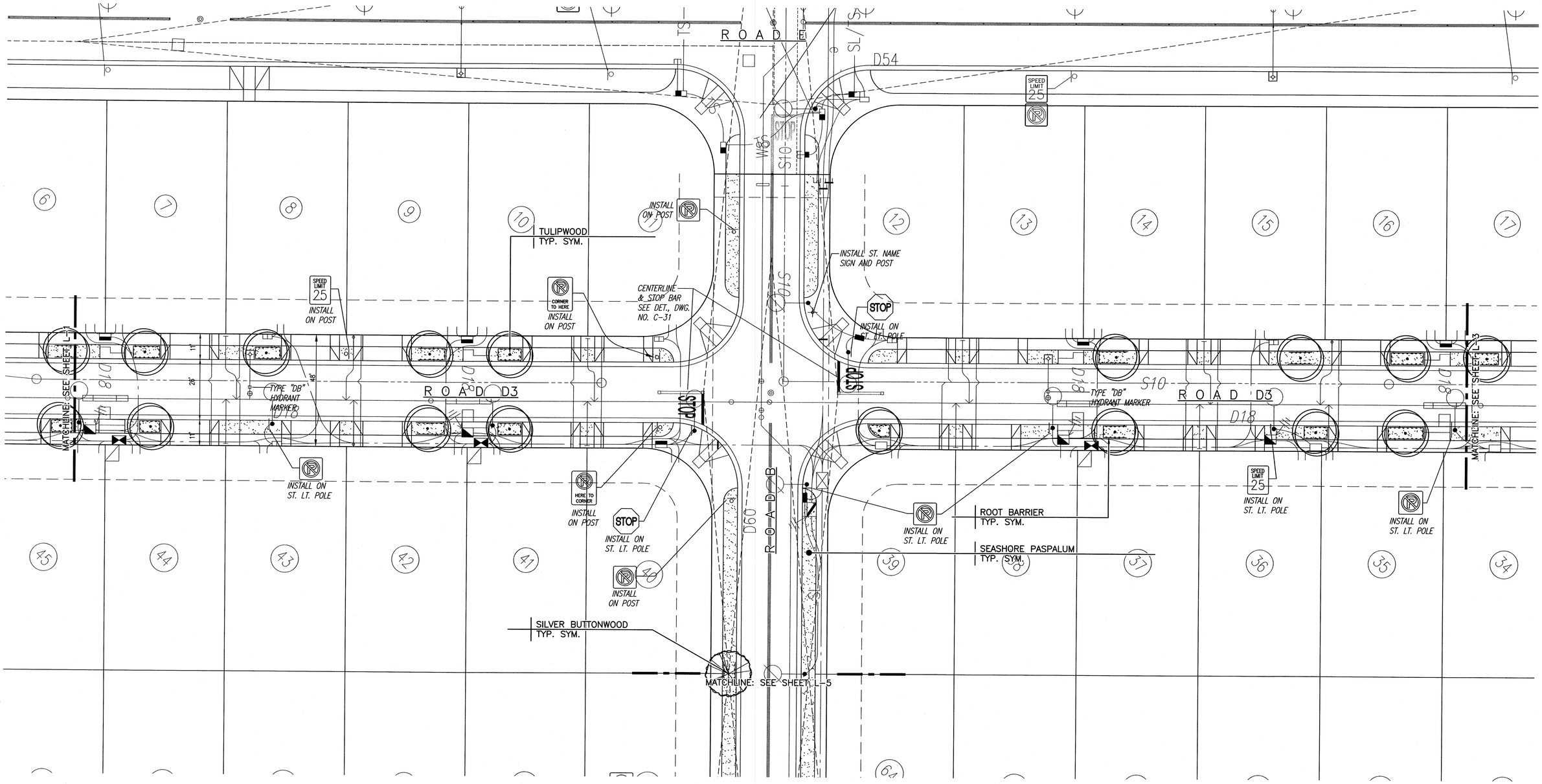

R. STAN DUNCAN
LICENSED PROFESSIONAL LANDSCAPE ARCHITECT
No. 5815
HAWAII, U.S.A.

R. Stan Duncan
SIGNATURE EXPIRATION DATE OF LICENSE

THIS WORK WAS PREPARED BY ME OR UNDER MY SUPERVISION AND CONSTRUCTION OF THIS PROJECT WILL BE UNDER MY OBSERVATION

REVISION DATE	DESCRIPTION	MADE BY	APPROVED

cp&e Community Planning and Engineering, Inc.
Engineering Design | Construction Management | Infrastructure Planning
1100 Alakea Street, Sixth Floor Honolulu, Hawaii

EAST KAPOLEI II DEVELOPMENT INCREMENT 2B

HONOULIULI, EWA, OAHU, HAWAII
(DPP SUBD. FILE NO. 2011/SUB-155)
OWNER & DEVELOPER: DEPARTMENT OF HAWAIIAN HOME LANDS
TAX MAP KEY: 9-1-17: Portion 110

PLANTING PLAN 2

DRAWN BY: CB	ENGINEER: SD	CHECKED BY: RH

APPROVED:

Anthony X Ching 4/5/13
CHIEF, URBAN DESIGN BRANCH D.P.P. DATE

GRAPHIC SCALE: 1" = 20'-0"
0 5 10 20 40

PBR HAWAII & ASSOCIATES, INC.

DWG. NO. L-2 SHEET 69 OF 78 SHEETS

FILE	POCKET	FOLDER	NO.

P:\PROJECTS\OAHU\Kapolei\East Kapolei phase 2B\CD\L-2.dwg

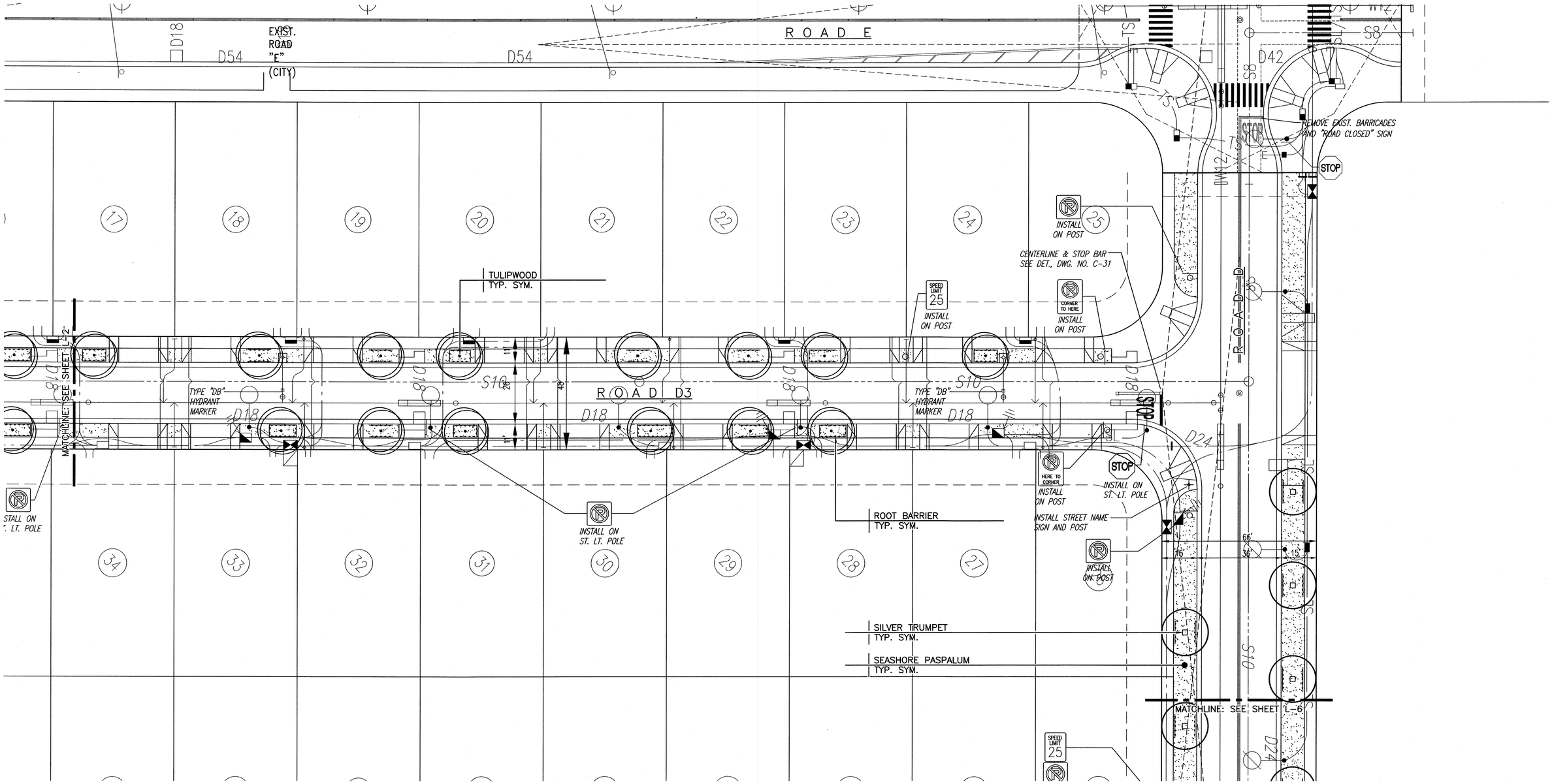

R. STAN DUNCAN
LICENSED PROFESSIONAL LANDSCAPE ARCHITECT
No. 5815
HAWAII, U.S.A.

R. Stan Duncan
SIGNATURE EXPIRATION DATE OF LICENSE

THIS WORK WAS PREPARED BY ME OR UNDER MY SUPERVISION AND CONSTRUCTION OF THIS PROJECT WILL BE UNDER MY OBSERVATION

REVISION DATE	DESCRIPTION	MADE BY	APPROVED

cp&e Community Planning and Engineering, Inc.
Engineering Design | Construction Management | Infrastructure Planning
1100 Alakea Street, 5th Floor Honolulu, Hawaii

EAST KAPOLEI II DEVELOPMENT INCREMENT 2B

HONOULIULI, EWA, OAHU, HAWAII
(DPP SUBD. FILE NO. 2011/SUB-155)
OWNER & DEVELOPER: DEPARTMENT OF HAWAIIAN HOME LANDS
TAX MAP KEY: 9-1-17: Portion 110

PLANTING PLAN 3

DRAWN BY: CB	ENGINEER: SD	CHECKED BY: RH

APPROVED:

Anthony X. Chung 4/5/13
CHIEF, URBAN DESIGN BRANCH D.P.P. DATE

GRAPHIC SCALE: 1" = 20'-0"
0 5 10 20 40

PBR HAWAII & ASSOCIATES, INC.

DWG. NO. L-3 SHEET 10 OF 78 SHEETS

FILE	POCKET	FOLDER	NO.

P:\PROJECTS\OAHU\Kapolei\East Kapolei phase 2B\CD\L-3.dwg

MATCHLINE: SEE SHEET L-6

MATCHLINE: SEE SHEET L-7

RAINBOW SHOWER
TYP. SYM.

SEASHORE PASPALUM
TYP. SYM.

INSTALL ON POST

INSTALL STREET NAME SIGN AND POST

STOP
INSTALL ON ST. LT. POLE

HERE-TO-CORNER
INSTALL ON POST

SILVER BUTTONWOOD
TYP. SYM.

TYPE "DB" HYDRANT MARKER

CENTERLINE & STOP BAR
SEE DET., DWG. NO. C-31

R O A D D2

R O A D A

D18

D24

D54

INSTALL ON ST. LT. POLE

SPEED LIMIT 25
INSTALL ON POST

CORNER TO HERE
INSTALL ON POST

ROOT BARRIER
TYP. SYM.

52 53 54 55 56 57 58 59 97 98 99 100 101 102 103 105 106 107 108 109 110 111 112

P:\PROJECTS\OAHU\Kapolei\East Kapolei phase 2B\CD\L-4.dwg

R. STAN DUNCAN
LICENSED PROFESSIONAL LANDSCAPE ARCHITECT
No. 5815
HAWAII, U.S.A.

SIGNATURE EXPIRATION DATE OF LICENSE

THIS WORK WAS PREPARED BY ME OR UNDER MY SUPERVISION AND CONSTRUCTION OF THIS PROJECT WILL BE UNDER MY OBSERVATION

REVISION DATE	DESCRIPTION	MADE BY	APPROVED

cp&e **Community Planning and Engineering, Inc.**
Engineering Design | Construction Management | Infrastructure Planning
1100 Alakea Street, 26th Floor Honolulu, Hawaii

EAST KAPOLEI II DEVELOPMENT INCREMENT 2B

HONOULIULI, EWA, OAHU, HAWAII
(DPP SUBD. FILE NO. 2011/SUB-155)
OWNER & DEVELOPER: DEPARTMENT OF HAWAIIAN HOME LANDS
TAX MAP KEY: 9-1-17: Portion 110

PLANTING PLAN 4

DRAWN BY: CB	ENGINEER: SD	CHECKED BY: RH

APPROVED:

Anthony X. Ching 4/5/13
CHIEF, URBAN DESIGN BRANCH D.P.P. DATE

GRAPHIC SCALE: 1" = 20'-0"
0 5 10 20 40

PBR HAWAII & ASSOCIATES, INC.

DWG. NO. L-4

SHEET 71 OF 78 SHEETS

FILE	POCKET	FOLDER	NO.

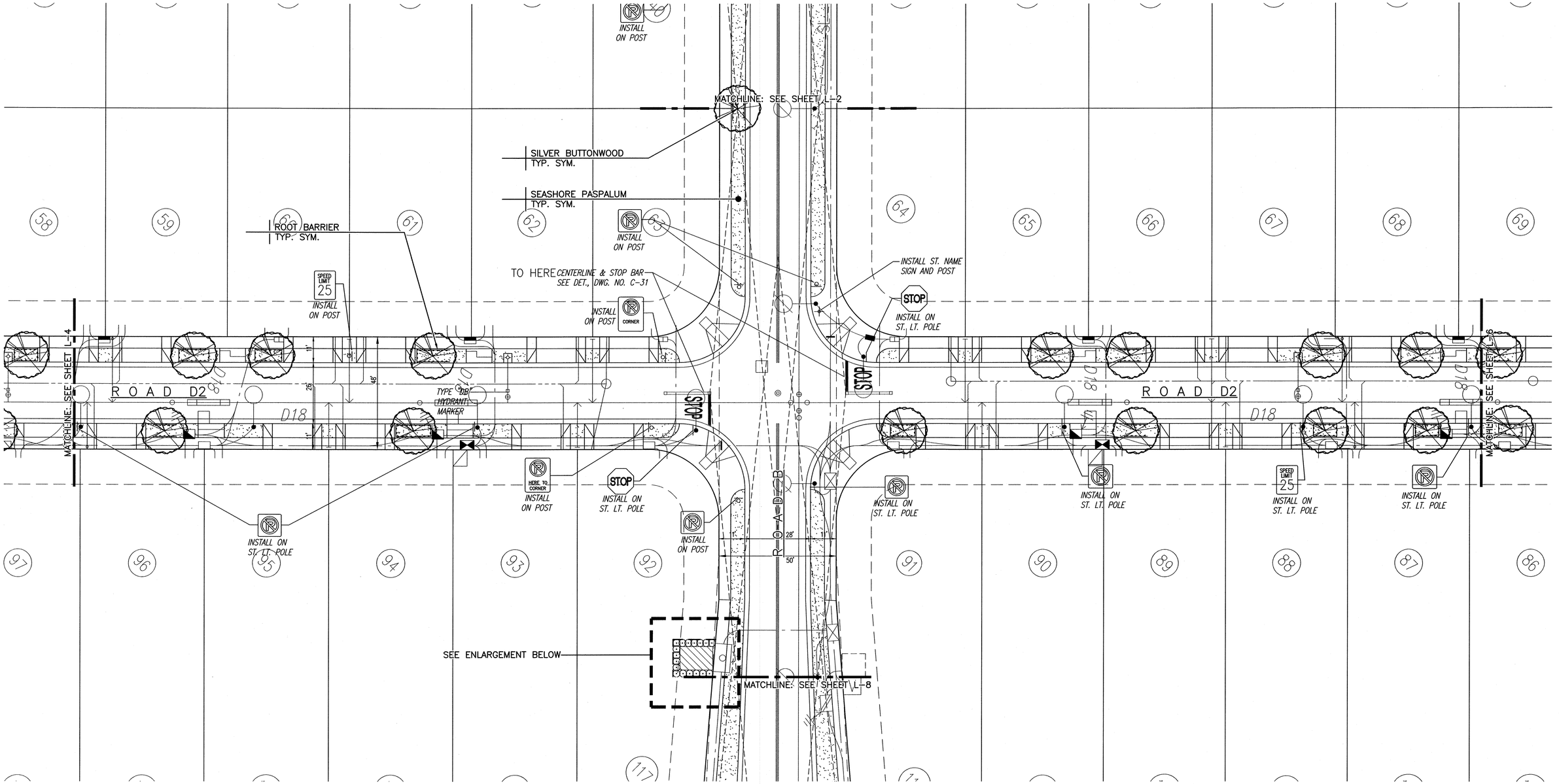

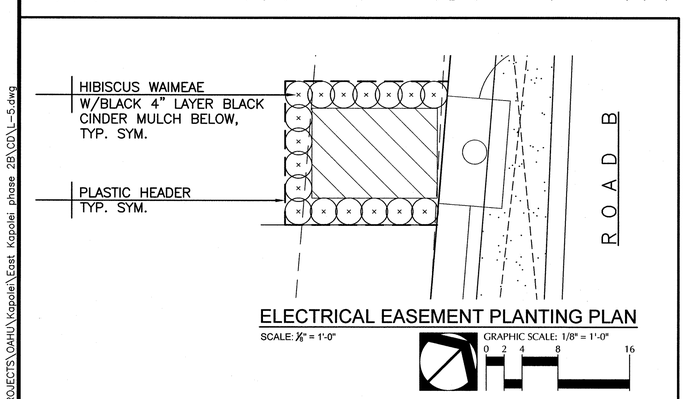

ELECTRICAL EASEMENT PLANTING PLAN

SCALE: 1/8" = 1'-0"

GRAPHIC SCALE: 1/8" = 1'-0"

0 2 4 8 16

GRAPHIC SCALE: 1" = 20'-0"

0 5 10 20 40

R. STAN DUNCAN
LICENSED PROFESSIONAL LANDSCAPE ARCHITECT
No. 5815
HAWAII, U.S.A.

SIGNATURE EXPIRATION DATE OF LICENSE

THIS WORK WAS PREPARED BY ME OR UNDER MY SUPERVISION AND CONSTRUCTION OF THIS PROJECT WILL BE UNDER MY OBSERVATION

REVISION DATE	DESCRIPTION	MADE BY	APPROVED

cp&e Community Planning and Engineering, Inc.
Engineering Design | Construction Management | Infrastructure Planning
1100 Alakea Street, 6th Floor Honolulu, Hawaii

EAST KAPOLEI II DEVELOPMENT INCREMENT 2B

HONOULIULI, EWA, OAHU, HAWAII
(DPP SUBD. FILE NO. 2011/SUB-155)
OWNER & DEVELOPER: DEPARTMENT OF HAWAIIAN HOME LANDS
TAX MAP KEY: 9-1-17: Portion 110

PLANTING PLAN 5

DRAWN BY: CB	ENGINEER: SD	CHECKED BY: RH

APPROVED:

Anthony X. Ching 4/5/13
CHIEF, URBAN DESIGN BRANCH D.P.P. DATE

PBR HAWAII & ASSOCIATES, INC.

DWG. NO. L-5

SHEET 72 OF 78 SHEETS

FILE	POCKET	FOLDER	NO.

P:\PROJECTS\OAHU\Kapolei\East Kapolei phase 2B\CD\L-5.dwg

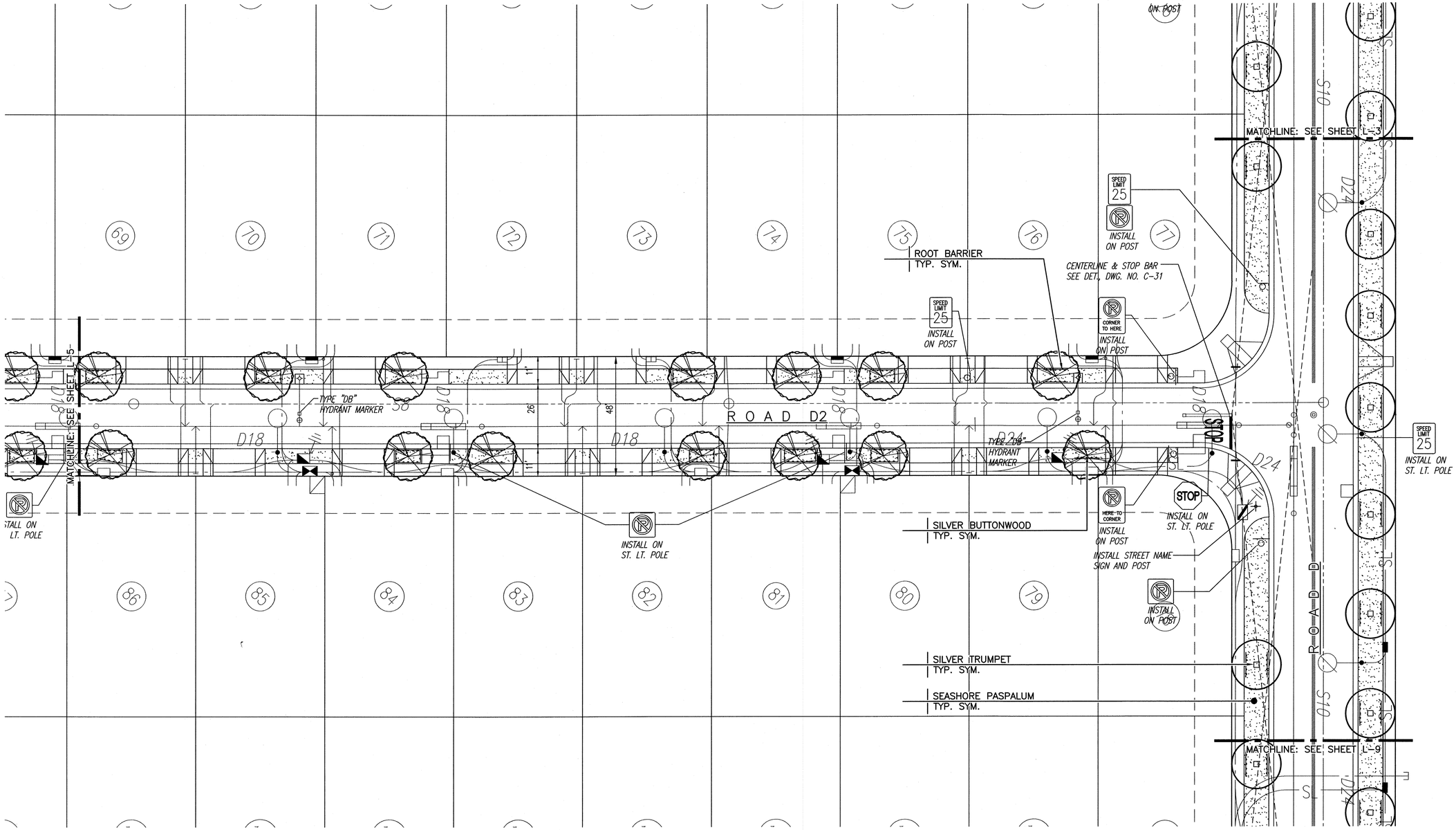

P:\PROJECTS\OAHU\Kapolei\East Kapolei phase 2B\CD\L-6.dwg

R. STAN DUNCAN
LICENSED PROFESSIONAL LANDSCAPE ARCHITECT
No. 5815
HAWAII, U.S.A.

SIGNATURE EXPIRATION DATE OF LICENSE

THIS WORK WAS PREPARED BY ME OR UNDER MY SUPERVISION AND CONSTRUCTION OF THIS PROJECT WILL BE UNDER MY OBSERVATION

REVISION DATE	DESCRIPTION	MADE BY	APPROVED

cp&e **Community Planning and Engineering, Inc.**
Engineering Design | Construction Management | Infrastructure Planning
1100 Alakea Street, Sixth Floor Honolulu, Hawaii

EAST KAPOLEI II DEVELOPMENT INCREMENT 2B

HONOULIULI, EWA, OAHU, HAWAII
(DPP SUBD. FILE NO. 2011/SUB-155)
OWNER & DEVELOPER: DEPARTMENT OF HAWAIIAN HOME LANDS
TAX MAP KEY: 9-1-17: Portion 110

PLANTING PLAN 6

DRAWN BY: CB	ENGINEER: SD	CHECKED BY: RH

APPROVED:

DIRECTOR, URBAN DESIGN BRANCH, D.P.P. 4/5/13

GRAPHIC SCALE: 1" = 20'-0"
0 5 10 20 40

PBR HAWAII & ASSOCIATES, INC.

DWG. NO. L-6

SHEET 73 OF 78 SHEETS

FILE	POCKET	FOLDER	NO.

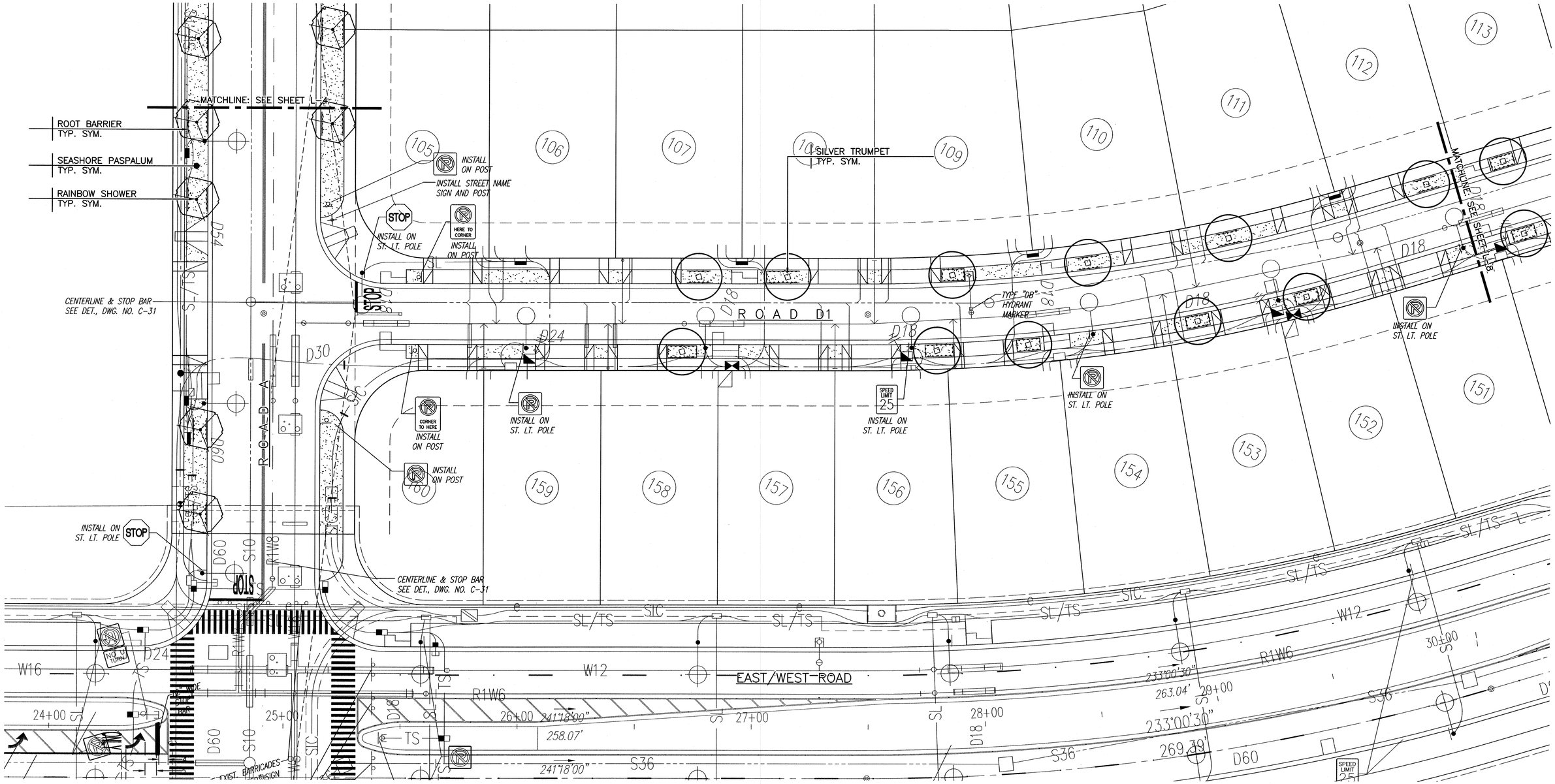

R. STAN DUNCAN
LICENSED PROFESSIONAL LANDSCAPE ARCHITECT
No. 5815
HAWAII, U.S.A.

R. Stan Duncan
SIGNATURE EXPIRATION DATE OF LICENSE

THIS WORK WAS PREPARED BY ME OR UNDER MY SUPERVISION AND CONSTRUCTION OF THIS PROJECT WILL BE UNDER MY OBSERVATION

REVISION DATE	DESCRIPTION	MADE BY	APPROVED

Community Planning and Engineering, Inc.
Engineering Design | Construction Management | Infrastructure Planning
1100 Alakea Street, Sixth Floor Honolulu, Hawaii

EAST KAPOLEI II DEVELOPMENT INCREMENT 2B

HONOULIULI, EWA, OAHU, HAWAII
(DPP SUBD. FILE NO. 2011/SUB-155)
OWNER & DEVELOPER: DEPARTMENT OF HAWAIIAN HOME LANDS
TAX MAP KEY: 9-1-17: Portion 110

PLANTING PLAN 7

DRAWN BY: CB	ENGINEER: SD	CHECKED BY: RH

APPROVED:

Anthony X. Chiu 4/5/13
CHIEF, URBAN DESIGN BRANCH D.P.P. DATE

GRAPHIC SCALE: 1" = 20'-0"
0 5 10 20 40

PBR HAWAII & ASSOCIATES, INC.

DWG. NO. L-7 SHEET 74 OF 78 SHEETS

FILE	POCKET	FOLDER	NO.

P:\PROJECTS\OAHU\Kapolei\East Kapolei phase 2B\CD\L-7.dwg

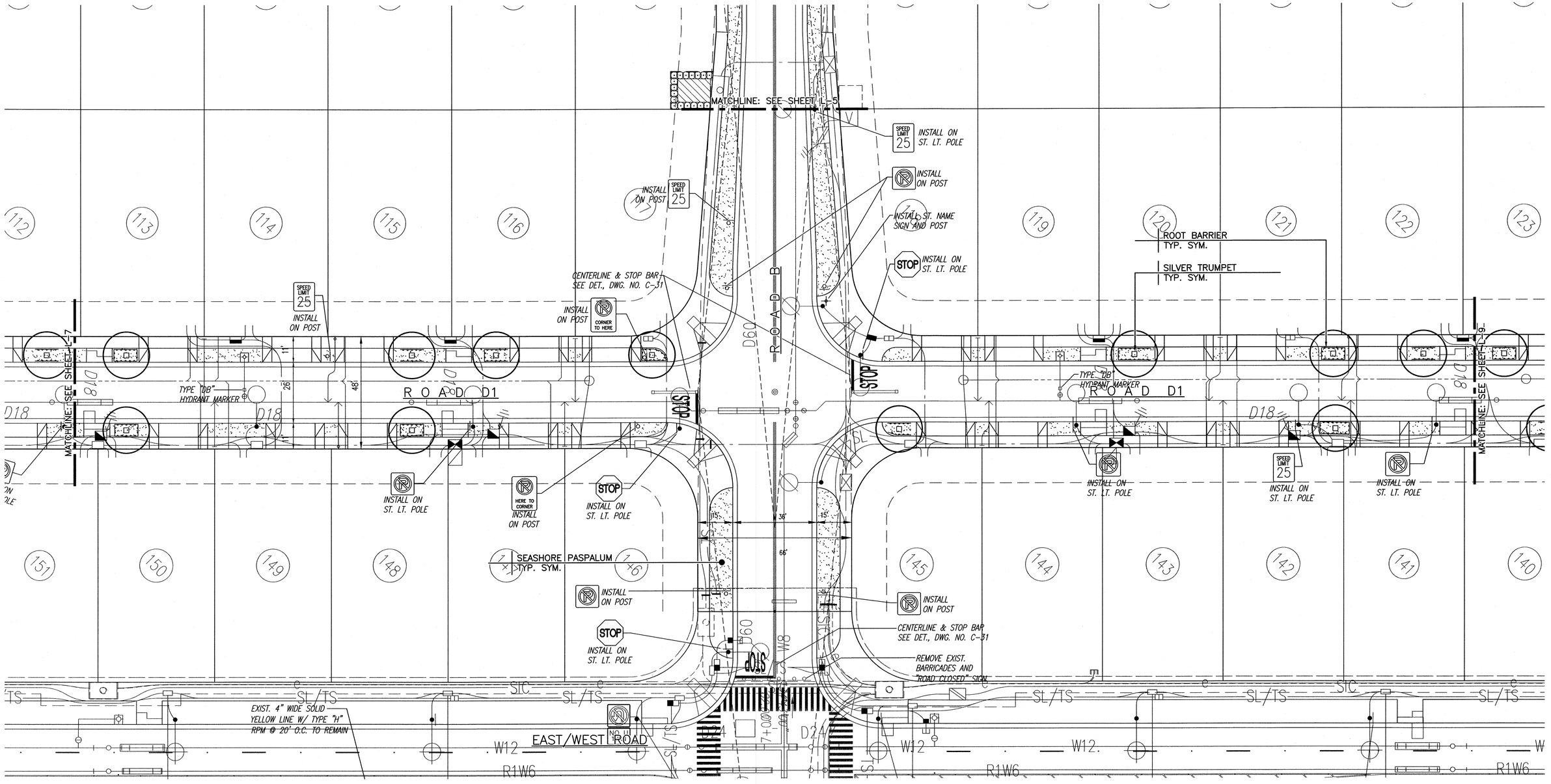

R. STAN DUNCAN
LICENSED PROFESSIONAL LANDSCAPE ARCHITECT
No. 5815
HAWAII, U.S.A.

SIGNATURE — EXPIRATION DATE OF LICENSE

THIS WORK WAS PREPARED BY ME OR UNDER MY SUPERVISION AND CONSTRUCTION OF THIS PROJECT WILL BE UNDER MY OBSERVATION

REVISION DATE	DESCRIPTION	MADE BY	APPROVED

cp&e **Community Planning and Engineering, Inc.**
Engineering Design | Construction Management | Infrastructure Planning
1100 Alakea Street, 6th Floor — Honolulu, Hawaii

EAST KAPOLEI II DEVELOPMENT INCREMENT 2B

HONOULIULI, EWA, OAHU, HAWAII
(DPP SUBD. FILE NO. 2011/SUB-155)
OWNER & DEVELOPER: DEPARTMENT OF HAWAIIAN HOME LANDS
TAX MAP KEY: 9-1-17: Portion 110

PLANTING PLAN 8

DRAWN BY: CB	ENGINEER: SD	CHECKED BY: RH

APPROVED:

CHIEF, URBAN DESIGN BRANCH, D.P.P. — DATE 4/5/13

GRAPHIC SCALE: 1" = 20'-0"
0 5 10 20 40

PBR HAWAII & ASSOCIATES, INC.

DWG. NO. **L-8**

SHEET 75 OF 78 SHEETS

FILE	POCKET	FOLDER	NO.

P:\PROJECTS\OAHU\Kapolei\East Kapolei phase 2B\CD\L-8.dwg

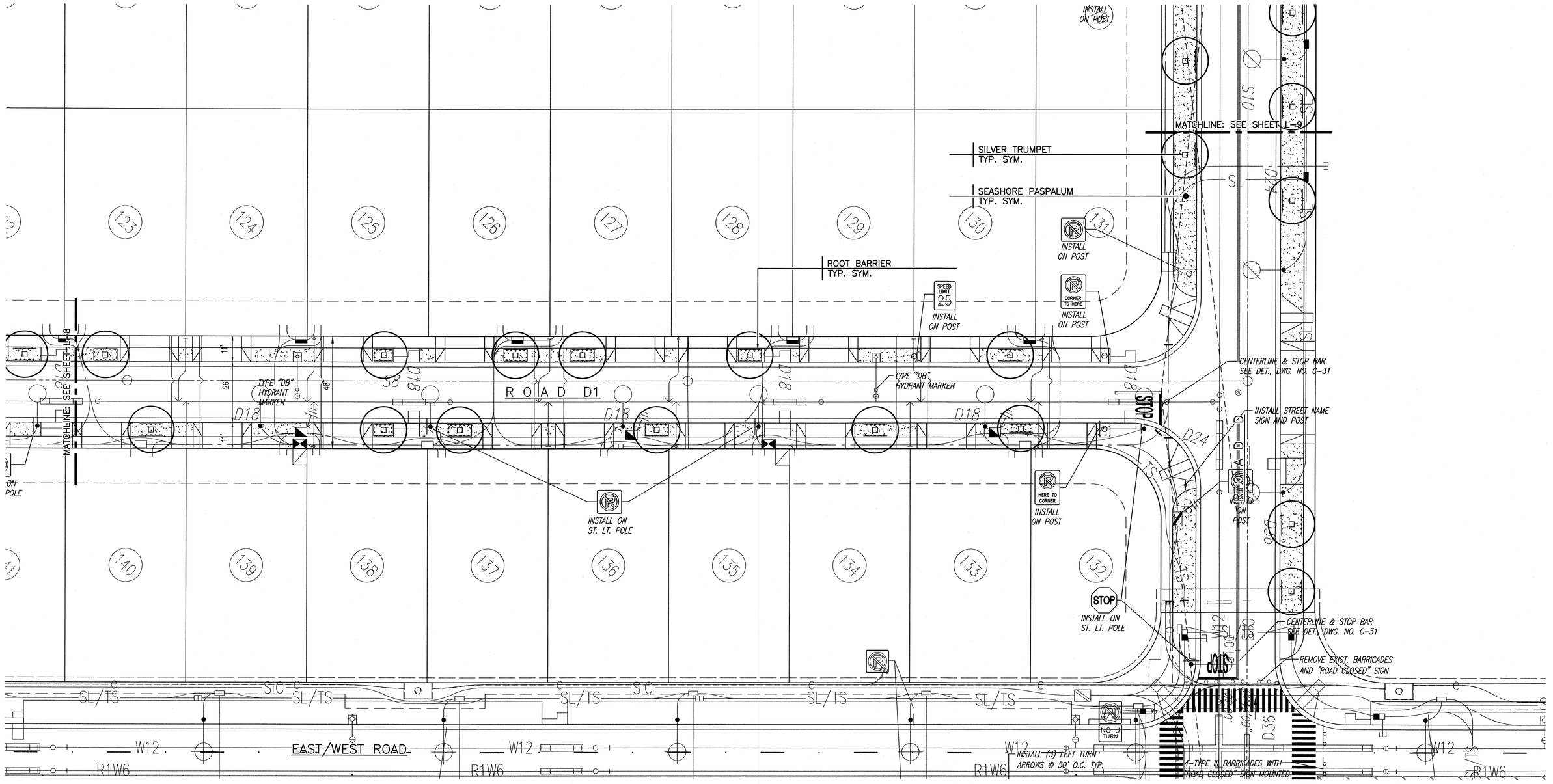

P:\PROJECTS\OAHU\Kapolei\East Kapolei phase 2B\CD\L-9.dwg

R. STAN DUNCAN
LICENSED PROFESSIONAL LANDSCAPE ARCHITECT
No. 5815
HAWAII, U.S.A.

SIGNATURE — EXPIRATION DATE OF LICENSE

THIS WORK WAS PREPARED BY ME OR UNDER MY SUPERVISION AND CONSTRUCTION OF THIS PROJECT WILL BE UNDER MY OBSERVATION

REVISION DATE	DESCRIPTION	MADE BY	APPROVED

cp&e **Community Planning and Engineering, Inc.**
Engineering Design | Construction Management | Infrastructure Planning
1100 Alakea Street, 26th Floor — Honolulu, Hawaii

EAST KAPOLEI II DEVELOPMENT INCREMENT 2B

HONOULIULI, EWA, OAHU, HAWAII
(DPP SUBD. FILE NO. 2011/SUB-155)
OWNER & DEVELOPER: DEPARTMENT OF HAWAIIAN HOME LANDS
TAX MAP KEY: 9-1-17: Portion 110

PLANTING PLAN 9

DRAWN BY: CB	ENGINEER: SD	CHECKED BY: RH

APPROVED:

Anthony X. Ching 4/5/13
CHIEF, URBAN DESIGN BRANCH D.P.P. — DATE

GRAPHIC SCALE: 1" = 20'-0"
0 5 10 20 40

PBR HAWAII & ASSOCIATES, INC.

DWG. NO. **L-9**

SHEET 76 OF 78 SHEETS

FILE #	POCKET	FOLDER	NO.

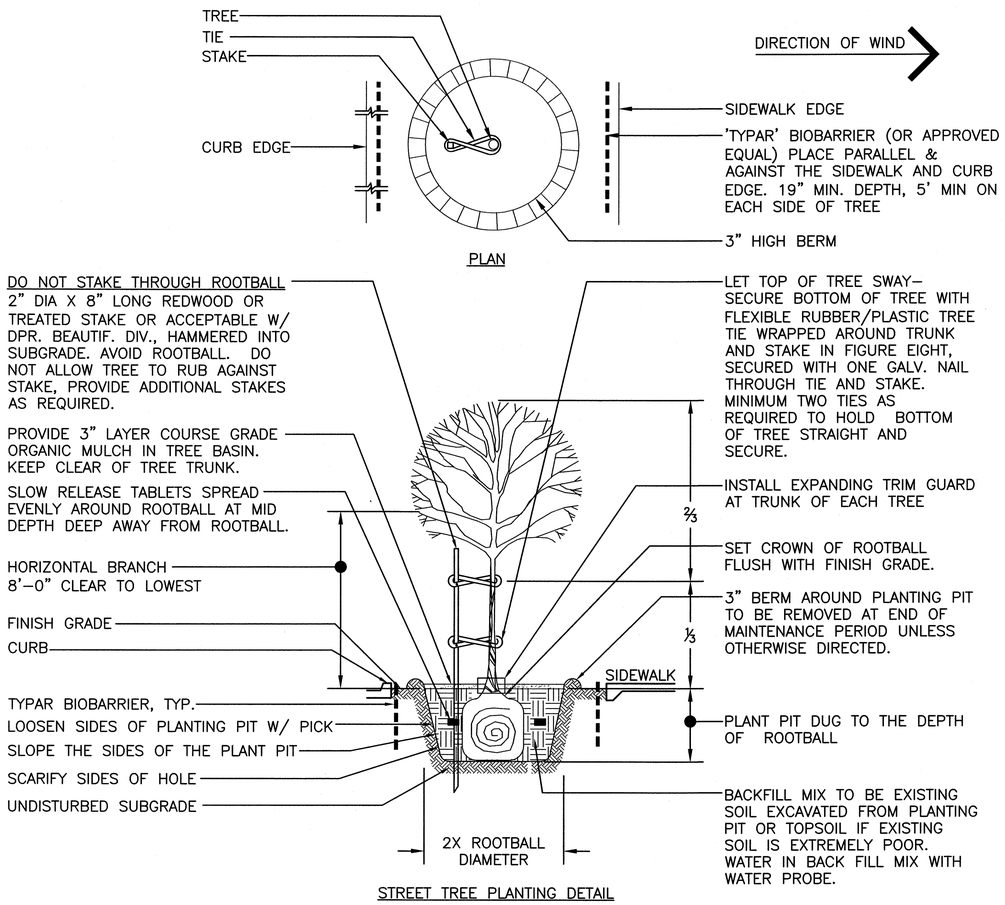

STREET TREE PLANTING DETAIL

NOTE:
DIRECTION OF MAIN BRANCHING SHALL BE PARALLEL TO PLANTING STRIP AND NOT ONTO ROADWAY.

1 STREET TREE DETAIL

1" = 1'–0"

329343.16–24

HYDRO SEED/ HYDRO SPRIG:
SHALL BE SPECIFICALLY PROCESSED FIBER CONTAINING NO GROWTH OR GERMINATION INHIBITING FACTORS. IT SHALL BE SUCH THAT AFTER ADDITION AND AGITATION IN THE HYDRAULIC EQUIPMENT WITH SEEDS/SPRINGS, FERTILIZER, WATER AND, OTHER ADDITIVES NOT DETRIMENTAL TO PLANT GROWTH. THE FIBERS WILL FORM A HOMOGENEOUS SLURRY. WHEN HYDRAULICALLY SPRAYED ON THE SOIL, THE FIBERS SHALL FORM A BLOTTER–LIKE GROUND COVER WHICH READILY ABSORBS WATER AND ALLOWS INFILTRATION, COMPLETE COVERAGE OF THE SURFACE SHALL BE ATTAINED.



3 HYDRO-SEED/SPRIG DETAIL

NOT TO SCALE

329313–04

UB 24–2 SPECIFICATIONS 24" DEEPROOT TREE ROOT BARRIERS

SPECIFIED TREE ROOT BARRIERS ARE A MECHANICAL BARRIER AND ROOT DEFLECTOR TO PREVENT TREE ROOTS FROM DAMAGING HARDSCAPES AND LANDSCAPES. ASSEMBLED IN 2' LONG MODULES TO CREATE VARYING SIZES OF CYLINDERS FOR SURROUNDING ROOT BALLS (SURROUND PLANTING STYLE) OR FOR LINEAR APPLICATIONS DIRECTLY BESIDE A HARDSCAPE ADJACENT TO ONE SIDE OF THE TREES (LINEAR PLANTING STYLE).

A. MATERIALS

1. THE CONTRACTOR SHALL FURNISH AND INSTALL TREE ROOT BARRIERS AS SPECIFIED. THE TREE ROOT BARRIERS SHALL BE PRODUCT # UB 24–2 AS MANUFACTURED BY DEEP ROOT PARTNERS, L.P. 81 LANGTON ST. #4 SAN FRANCISCO, LA (800–458–7668), OR APPROVED EQUAL. THE BARRIER SHALL BE BLACK, INJECTION MOLDED PANELS, OF 0.085" (2.16MM) WALL THICKNESS IN MODULES 24" (61CM) LONG BY 24" (61 CM) DEEP; MANUFACTURED WITH A MINIMUM 50%%% POST CONSUMER RECYCLED POLYPROPYLENE PLASTIC WITH ADDED ULTRAVIOLET INHIBITORS; RECYCLABLE. EACH PANEL SHALL HAVE: NOT LESS THAN 4 MOLDED INTEGRAL VERTICAL ROOT DEFLECTING RIBS OF AT LEAST 0.085" (2.16MM) THICKNESS PROTRUDING 1/2" (12.7MM) AT 90° FROM INTERIOR OF THE BARRIER PANEL, SPACED 6" (15.24CM) APART. (SEE PANEL DRAWING BELOW) A DOUBLE TOP EDGE CONSISTING OF TWO PARALLEL, INTEGRAL, HORIZONTAL RIBS AT THE TOP OF THE PANEL OF A MINIMUM 0.085" (2.16MM) THICKNESS, 3/8" (9.53MM) WIDE AND 1/4" (6.35MM) APART WITH THE LOWER RIB ATTACHED TO THE VERTICAL ROOT DEFLECTING RIBS.(SEE DETAIL "A") A MINIMUM OF 9 ANTI–LIFT GROUND LOCK TABS CONSISTING OF INTEGRAL HORIZONTAL RIDGES OF A MINIMUM 0.085" (2.16MM) THICKNESS IN THE SHAPE OF A SEGMENT OF A CIRCLE, THE 2" (50.8MM) CHORD OF THE SEGMENT JOINING THE PANEL WALL AND THE SEGMENT, PROTRUDING 3/8" (9.53MM) FROM THE PANEL. THE NINE GROUND LOCKS ON EACH PANEL SHALL BE ABOUT EQUALLY SPACED BETWEEN EACH OF THE VERTICAL ROOT DEFLECTING RIBS (3 BETWEEN EACH SET OF RIBS, SEE DETAIL "B"). AN INTEGRATED ZIPPER JOINING SYSTEM PROVIDING FOR INSTANT ASSEMBLY BY SLIDING ONE PANEL INTO ANOTHER. (SEE DETAIL "C")

2. THE BASIC PROPERTIES OF THE MATERIAL SHALL BE: TEST ASTM TEST METHOD TYPICAL VALUE COPOLYMER POLYPROPYLENE

TENSILE STRENGTH @ YIELD – WALL D638	2.354 PSI
TENSILE STRENGTH @ YIELD – HINGE	D638 2.846 PSI
YIELD ELONGATION – WALL	D638 7.44%
YIELD ELONGATION – HINGE	D638 7.01%
FLEXURAL MODULUS	D790B 119.625 PSI
3.84 (FT–LBS) D256A NOTCHED IZOD IMPACT – WALL	

ROCKWELL HARDNESS R. SCALE – WALL D785A 84.4
U.S. PATENTS: 5,070,642 , 5,305,549 AND 5,528,857. OTHER PATENTS PENDING.

B. CONSTRUCTION AND INSTALLATION:

1. THE CONTRACTOR SHALL INSTALL THE TREE ROOT BARRIERS WITH THE NUMBER OF PANELS AND IN THE MANNER SHOWN ON THE DRAWINGS. THE VERTICAL ROOT DEFLECTING RIBS SHALL BE FACING INWARDS TO THE ROOT BALL AND THE DOUBLE TOP EDGE SHALL BE 1/2" (12.7MM) ABOVE GRADE. EACH OF THE REQUIRED NUMBER OF PANELS SHALL BE CONNECTED TO FORM A CIRCLE AROUND THE ROOT BALL OR JOINED IN A LINEAR FASHION AND PLACED ALONG THE ADJACENT HARDSCAPE.
2. EXCAVATION AND SOIL PREPARATION SHALL CONFORM TO THE DRAWINGS.

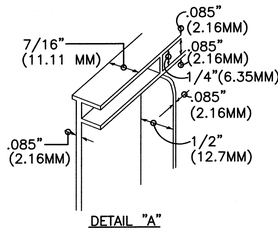

DETAIL "A"

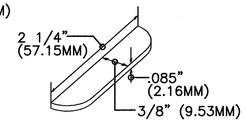

DETAIL "B"

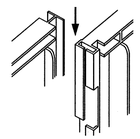

DETAIL "C"

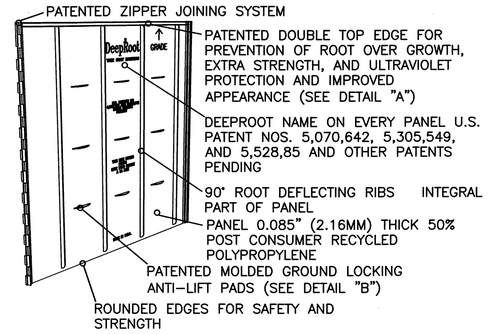

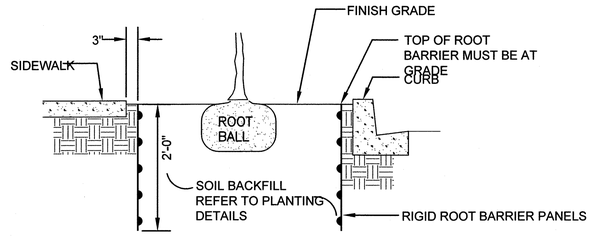

2 DEEP ROOT BARRIER DETAIL

1" = 1'–0"

R. STAN DUNCAN
LICENSED PROFESSIONAL LANDSCAPE ARCHITECT
No. 5815
HAWAII, U.S.A.

SIGNATURE EXPIRATION DATE OF LICENSE

THIS WORK WAS PREPARED BY ME OR UNDER MY SUPERVISION AND CONSTRUCTION OF THIS PROJECT WILL BE UNDER MY OBSERVATION

REVISION DATE	DESCRIPTION	MADE BY	APPROVED

cp&e Community Planning and Engineering, Inc.
Engineering Design | Construction Management | Infrastructure Planning
1100 Alakea Street, 26th Floor Honolulu, Hawaii

EAST KAPOLEI II DEVELOPMENT INCREMENT 2B

HONOULIULI, EWA, OAHU, HAWAII
(DPP SUBD. FILE NO. 2011/SUB-155)
OWNER & DEVELOPER: DEPARTMENT OF HAWAIIAN HOME LANDS
TAX MAP KEY: 9-1-17: Portion 110

PLANTING DETAILS

DRAWN BY: CB	ENGINEER: SD	CHECKED BY: RH

APPROVED:

CHIEF, URBAN DESIGN BRANCH D.P.P. DATE 4/5/13

GRAPHIC SCALE: 1" = 20'-0"
0 5 10 20 40

PBR HAWAII & ASSOCIATES, INC.

FILE	POCKET	FOLDER	NO.

DWG. NO. L-10 SHEET 77 OF 78 SHEETS

P:\PROJECTS\OAHU\Kapolei\East Kapolei phase 2B\CD\L-10.dwg

STREET TREE PLANTING NOTES

1. NEW TREES SHALL BE PRE-APPROVED AT THE NURSERY BY THE LANDSCAPE ARCHITECT CONSULTANT AND CONCURRED BY DUF (DIVISION OF URBAN FORESTRY) TWO WEEKS PRIOR TO THEIR DELIVERY TO THE PROJECT SITE. CONTACT MR. BRANDON AU, PARKS GROUNDS IMPROVEMENT SUPERVISOR II OF DUF, AT 971-7151 TO SCHEDULE AN INSPECTION. TREES THAT DO NOT HAVE WELL ESTABLISHED ROOT SYSTEMS WILL BE REJECTED.

2. UPON INSTALLATION OF THE STREET TREES, THE INSTALLER/CONTRACTOR SHALL CONTACT DPR, DUF AT 971-7151 TO SCHEDULE AN INSPECTION OF THE TREE(S) INSTALLATION. NOTIFICATION MUST BE GIVEN AT LEAST SEVEN (7) DAYS PRIOR TO PRE-MAINTENANCE AND FINAL INSPECTIONS. A NOTICE TO ACCEPTANCE WILL BE ISSUED BY THE DPR WHEN THEY HAVE DETERMINED THE TREES HAVE BEEN PROPERLY INSTALLED AND MAINTAINED.

3. ADJACENT PROPERTY OWNERS AND/OR THE COMMUNITY ASSOCIATION WILL BE RESPONSIBLE FOR THE ON-GOING MAINTENANCE AND REPAIR OF THE STREET TREES AND MEDIAN TREES, TREE WELLS, GRATES, GROUND COVERS, MOWING, FERTILIZING, IRRIGATION SYSTEM AND PAYMENT FOR THE WATER AND ELECTRICAL USAGE WITHIN THE ROAD RIGHT-OF-WAY BEFORE AND AFTER THE STREETS ARE DEDICATED TO THE "CITY AND COUNTY OF HONOLULU".

4. THE STREET TREE MAINTENANCE PERIOD SHALL BE FOR NINETY (90) CALENDAR DAYS OR UNTIL PROJECT MAINTENANCE HAS BEEN ASSUMED BY ABUTTING PROPERTY OWNER.

5. THE STANDARD CITY AND COUNTY OF HONOLULU, DEPARTMENT OF PARKS AND RECREATION SPECIFICATIONS FOR STREET TREE PLANTING AND LANDSCAPING SHALL BE MADE PART OF THE CONSTRUCTION DOCUMENTS.

6. STREET TREE PLANTING THAT HAVE BEEN REVISED OR PROJECTS THAT HAVEN'T STARTED CONSTRUCTION WITHIN TWO (2) YEARS OF THE DATE OF THE DEPARTMENT OF PLANNING AND PERMITTING (DPP) APPROVAL WILL BE SUBJECT TO RE-APPROVAL. WHEN SUBSTITUTION OF TREE TYPES ARE REQUESTED BY THE DEVELOPER OR CONTRACTOR DUE TO UNAVAILABILITY, THE PLANS SHALL BE REVISED (AFTER NOTIFICATION OF TREE SELECTION) AND (THE PLANS) SUBMITTED FOR RE-APPROVAL.

7. PRIOR TO ACCEPTANCE OF THE TREE INSTALLATION BY THE DIVISION OF URBAN FORESTRY, DEPARTMENT OF PARKS AND RECREATION, THE STREET INSTALLER IS REQUIRED TO SUBMIT REPRODUCIBLE AS-BUILT PLANS TO THE DEPARTMENT OF PARKS AND RECREATION.

8. APPROVAL IS FOR STREET TREE PLANTING WITHIN THE ROAD RIGHT-OF-WAY ONLY. IT IS NOT AN APPROVAL OF THE PLANTING AND IRRIGATION PLAN OUTSIDE OF THE ROAD RIGHT-OF-WAY.

9. THE STREET LIGHTING SYSTEM SHALL BE KEPT OPERATIONAL DURING CONSTRUCTION. ANY RELOCATION REQUIRED SHALL BE APPROVED BY THE MECHANICAL/ELECTRICAL DESIGN AND ENGINEERING DIVISION, DEPARTMENT OF DESIGN AND CONSTRUCTION, AND PAID FOR BY THE CONTRACTOR.

10. THE CONTRACTOR SHALL BE RESPONSIBLE FOR ANY DAMAGES TO THE CITY'S EXISTING STREET LIGHTING FACILITIES, TRAFFIC SIGNAL FACILITIES (INCLUDING THE TRAFFIC SIGNAL INTERCONNECT SYSTEM, COMMUNICATIONS FIBER OPTIC CABLE SYSTEM AND TRAFFIC SIGNAL FIBER OPTIC CABLE SYSTEM). ANY AND ALL DAMAGES TO THESE FACILITIES SHALL BE REPAIRED BY THE CONTRACTOR AT HIS COST IN ACCORDANCE WITH THE REQUIREMENTS OF THE CITY AND COUNTY OF HONOLULU.

11. AFTER INSTALLATION OF PLANTING, LANDSCAPE CONTRACTOR TO PROVIDE MARK-UP INFORMATION OF ANY CHANGES MADE IN THE FIELD TO THE FINAL DESIGN PLANS.

PLANT SCHEDULE

TREES	QTY	BOTANICAL NAME	COMMON NAME	CONT	CAL	SIZE	REMARKS
	19	CASSIA X NEALIAE	RAINBOW SHOWER	25 GAL	2"CAL	6'-8' HT.	
	36	CONOCARPUS ERECTUS SERICEUS	SILVER BUTTON WOOD	25 GAL	2"CAL	6'-8' HT.	
	35	HARPULLIA PENDULA	TULIPWOOD	25 GAL	2"CAL	6'-8' HT.	
	50	TABEBUIA CARAIBA	SILVER TRUMPET	25 GAL	2"CAL	6'-8' HT.	

SHRUBS	QTY	BOTANICAL NAME	COMMON NAME	CONT	O.C.	REMARKS
	17	HIBISCUS WAIMEAE	WHITE KAUAI HIBISCUS	3 GAL@ 3" OC	AS SHOWN	

SOD/SEED	QTY	BOTANICAL NAME	COMMON NAME	CONT	REMARKS
	45,513 SF	PASPALUM VAGINATUM	SEASHORE PASPALUM	HYDROSEED	

MISCELLANEOUS

SYMBOL	DESCRIPTION	QTY
	PLASTIC ROOT BARRIER	3,515 LF
	PLASTIC HEADER	51 LF
	2" LAYER SOIL AMENDMENT*	45,871 SF
	4" LAYER IMPORTED TOP SOIL*	566.3 CY
	4" LAYER BLACK CINDER MULCH*	1.68 CY

*NOT INDICATED ON PLANS

R. STAN DUNCAN
LICENSED PROFESSIONAL LANDSCAPE ARCHITECT
No. 5815
HAWAII, U.S.A.

R. Stan Duncan 4/30/14
SIGNATURE EXPIRATION DATE OF LICENSE

THIS WORK WAS PREPARED BY ME OR UNDER MY SUPERVISION AND CONSTRUCTION OF THIS PROJECT WILL BE UNDER MY OBSERVATION

GRAPHIC SCALE: 1" = 20'-0"
0 5 10 20 40

PBR HAWAII & ASSOCIATES, INC.

REVISION DATE	DESCRIPTION	MADE BY	APPROVED

cp&e Community Planning and Engineering, Inc.
Engineering Design | Construction Management | Infrastructure Planning
1100 Alakea Street, 8th Floor Honolulu, Hawaii

EAST KAPOLEI II DEVELOPMENT INCREMENT 2B

HONOULIULI, EWA, OAHU, HAWAII
(DPP SUBD. FILE NO. 2011/SUB-155)
OWNER & DEVELOPER: DEPARTMENT OF HAWAIIAN HOME LANDS
TAX MAP KEY: 9-1-17: Portion 110

PLANTING NOTES & LEGEND

DRAWN BY: CB	ENGINEER: SD	CHECKED BY: RH

APPROVED:

Anthony X. Chiu 4/5/13
CHIEF, URBAN DESIGN BRANCH D.P.P. DATE

DWG. NO. L-11

SHEET 76 OF 78 SHEETS

FILE	POCKET	FOLDER	NO.

P:\PROJECTS\OAHU\Kapolei\East Kapolei phase 2B\CD\L-11.dwg