TABLE OF CONTENTS

IFB-16-HHL-014

I. DIVISION 0 - BIDDING AND CONTRACT REQUIREMENTS

TABLE OF CONTENTS ..... TC-1 to TC-2
NOTICE TO BIDDERS INVITATION FOR BID 1-2
NOTICE OF INTENT TO BID 1
STANDARD QUALIFICATION QUESTIONNAIRE 1-17
INSTRUCTION FOR BID SUBMITTAL 1-15
BID OFFER FORM 1-15
SEALED BID (PROPOSAL) COVER SHEET 1
GENERAL CONDITIONS (STATE OF HAWAII: AG-008 103D) 1-16
DHHL CONSTRUCTION GENERAL CONDITIONS 1-68
SPECIAL CONDITIONS (STATE OF HAWAII: AG-015 REV. 11/15/2005) 1-9
WAGE DECISION (STATE, FEDERAL OR MAINTENANCE) 1-20
LIST OF CONSTRUCTION TRADES IN REGISTERED APPRENTICESHIP PROGRAMS 1-12
HAWAII STATE HOLIDAYS (2016 & 2017) 1

II. TECHNICAL SPECIFICATIONS

A. DIVISION 1 – GENERAL REQUIREMENTS Page

Section 00850 – DRAWING INDEX 1
Section 01010 – SUMMARY OF WORK 1-6
Section 01019 – GENERAL SPECIFICATIONS 1-5
Section 01300 – SUBMITTALS 1-3
Section 01310 – CONSTRUCTION SCHEUDLES & SCHEDULES OF VALUES 1-6
Section 01400 – QUALITY CONTROL REQUIREMENTS 1-2
Section 01440 – ARCHAEOLOGICAL FINDINGS 1
Section 01505 – MOBILIZATION AND DEMOBILIZATION 1-2
Section 01525 – SAFETY REQUIREMENTS 1
Section 01530 – BARRICADES 1-4
Section 01560 – ENVIRONMENTAL PROTECTION 1-6
Section 01567 – POLLUTION CONTROL 1-4
Section 01580 – TEMPORARY FACILITIES AND UTILITIES 1-2
Section 01750 – GUARANTEE 1-2
Section 01770 – CLOSEOUT PROCEDURES 1-13

B. DIVISION 2 – SITEWORK

Section 02100 – SITE PREPARATION 1-2
Section 02270 – TEMPORARY SOIL EROSION CONTROL 1-3
Section 02300 – EARTHWORK 1-7

III. APPENDIX

A. SUBSTITUTION REQUEST 1
B. CERTIFICATION RECYCLED CONTENT 1
C. CONTRACTORS LICENSING REQUIREMENTS 1
D. LISTING OF GENERAL AND SUBCONTRACTORS 1-5
E. PRIME CONSTRACTOR CERTIFICATION OF SUBCONTRACTOR ELIGIBILITY 1
F. CONTRACTOR'S CERTIFICATION OF PAYMENT 1

G. VALUE ENGINEERING CHANGE PROPOSAL (VECP) 1-2
H. VALUE ENGINEERING CHANGE PROPOSAL (CONTRACTOR REQUIRED INFO) 1
I. VALUE ENGINEERING CHANGE PROPOSAL (CONTRACTOR SUMMARY SUBMITTAL) 1
J. DHHL REQUIRED SUBMITTALS 1-2

IV. SAMPLE FORMS

STATE OF HAWAII AGREEMENT FOR GOODS AND SERVICES (SAMPLE CONTRACT) 1-9
CORPORATE RESOLUTION 1
EXHIBIT A – SURETY BOND 1-2
EXHIBIT B – PERFORMANCE BOND (SURETY) 1-2
EXHIBIT C – PERFORMANCE BOND 1-3
EXHIBIT D – LABOR AND MATERIAL PAYMENT BOND (SURETY) 1-2
EXHIBIT E – LABOR AND MATERIAL PAYMENT BOND 1-3
EXHIBIT G – PERFORMANCE BOND (SURETY) FOR SUPPLEMENTAL AGREEMENT FOR GOODS AND SERVICES 1-2
EXHIBIT H – PERFORMANCE BOND FOR SUPPLEMENTAL AGREEMENT FOR GOODS AND SERVICES 1-3
EXHIBIT I – CONTRACTOR ACKNOWLEDGEMENT 1
EXHIBIT J – SURETY ACKNOWLEDGEMENT 1
SPO-38 CERTIFICATION FOR HAWAII PRODUCT PREFERENCE 1
CERTIFICATION OF COMPLIANCE FOR EMPLOYMENT OF STATE RESIDENTS – COMPTROLLER'S MEMORANDUM NO. 2011-18, EXHIBIT 2 1
CERTIFICATION OF BIDDER'S PARTICIPATION IN APPROVED APPRENTICESHIP PROGRAM UNDER ACT 17 (FORM 1) 1
MONTHLY REPORT OF CONTRACTOR'S PARTICIPATION IN APPROVED APPRENTICESHIP PROGRAM UNDER ACT 17 (FORM 2) 1

END OF SECTION

STATE OF HAWAII

DEPARTMENT OF HAWAIIAN HOME LANDS
91-5420 Kapolei Parkway,
Kapolei, HI. 96707

BIDDING AND CONTRACT REQUIREMENTS

FOR

FURNISHING LABOR AND MATERIALS FOR

Scattered Lot Improvements for

Five Keaukaha Lots in Tract 1

WAIAKEA, SOUTH HILO, ISLAND OF HAWAII, STATE OF HAWAII,

IFB No.: IFB-16-HHL-014

APRIL 2016

NOTICE TO BIDDERS
INVITATION FOR BID
Department of Hawaiian Home Lands
Land Development Division
IFB NO.: IFB-16-HHL-014

SEALED BIDS for IFB No.: IFB-16-HHL-014, Scattered Lot Improvements for Five (5) Keaukaha Lots in Tract 1, Waiakea, South Hilo, County of Hawaii, State of Hawaii, will be received by the Department of Hawaiian Home Lands (DHHL), at Hale Kalanianaole, 91-5420 Kapolei Parkway, Kapolei, Hawaii 96707, until **2:00 p.m., Hawaii Standard Time (H.S.T.) May 23, 2016**, at which time all bids will be publicly opened and read aloud. Bids received after the time fixed for opening or delivered anywhere other than as specified above will not be considered.

To provide clearing, grubbing, protecting trees, vegetation, and other objects designated to remain, removing and disposing of vegetation, debris, and unwanted materials from the house lot parcel and other areas designated in the contract documents or by the Engineer. Perform clearing and grubbing in advance of grading operations and the installation of chain-link fence with 12 months of maintenance.

To be eligible to submit a bid, the Bidder and/or his subcontractors shall possess all required valid State of Hawaii licenses and specialty licenses needed to perform the work for this project. A surety bid bond will be required for this Invitation for Bids (IFB).

This project is subject to Section 103D, Hawaii Revised Statutes, and to the payment of not less than the prevailing salaries and wages promulgated by the State of Hawaii, Department of Labor and Industrial Relations.

Bid documents may be examined at or obtained from DHHL at the Department of Hawaiian Home Lands website:

http://www.dhhl.hawaii.gov/procurement/

There is no fee assessment to download the IFB documents from the DHHL website.

It is the responsibility of Interested Bidders to check the DHHL website for any addenda issued by DHHL.

All prospective bidders/offerors are strongly encouraged to attend a PRE-BID CONFERENCE to be held 9:00 A.M. H.S.T, on **April 27, 2016, at DHHL East Hawaii District Office, 160 Baker Avenue, Hilo, Hawaii 96720.** Subcontractors and union representatives are invited, but not required to attend. The conference is to provide bidders/offerors with an opportunity to ask questions about the contractual requirements and technical aspects of the project. A site visit of the project site will follow the pre-bid conference. Attendance of the site visit is not a condition for submitting a bid, but strongly recommended. Persons needing special accommodations due to a disability may submit such requests to Richard Speer, Project Manager, Land Development Division, via facsimile at (808) 620-9299.

A written NOTICE OF INTENTION TO BID is required and shall be received by the DHHL, Land Development Division, at 91-5420 Kapolei Parkway, Kapolei, Hawaii 96707, no later than May 13, 2016. Submittal of a NOTICE OF INTENTION TO BID via facsimile at (808) 620-9299 is acceptable.

A properly executed and notarized STANDARD QUALIFICATION QUESTIONNAIRE FOR OFFERORS, SPO Form-21 ("Questionnaire") is required and shall be submitted to the DHHL for evaluation no later than ten working days prior to the day designated for opening bids. The Questionnaire can be downloaded at the State Forms Central website:

http://hawaii.gov/forms/state-procurement-office.

Bids shall comply with the requirements of the IFB. Bids that do not comply with the IFB may be subject to disqualification. DHHL reserves the right to amend the IFB by written addenda, to reject any and all bids, or to waive any defects in said bids where DHHL deems it is in the best interest of the State.

CAMPAIGN CONTRIBUTIONS BY STATE AND COUNTY CONTRACTORS PROHIBITED. If awarded a contract in response to this solicitation, offeror agrees to comply with HRS §11-355, which states that campaign contributions are prohibited from a State and county government contractor during the term of the contract if the contractor is paid with funds appropriated by the legislative body between the execution of the contract through the completion of the contract.

Questions regarding this project may be directed in writing to Richard Speer, Project Manager, Land Development Division, DHHL, 91-5420 Kapolei Parkway, Kapolei, Hawaii 96707 or via facsimile at (808) 620-9299.

Dated at Honolulu, Hawaii, this 18th day of April, 2016.

DEPARTMENT OF HAWAIIAN HOME LANDS

Jobie M. K. Masagatani, Chairman
Hawaiian Homes Commission

Posted on the internet at: http://spo3.hawaii.gov/notices/notices

NOTICE OF INTENTION TO BID

Date: _____

Ms. Jobie M.K. Masagatani, Chairman
Hawaiian Homes Commission
DEPARTMENT OF HAWAIIAN HOME LANDS
91-5420 Kapolei Parkway
Kapolei, Hawaii 96707

Attention: RICHARD SPEER, PROJECT MANAGER, Land Development Division
Notice of Intention to Bid due 2:00 p.m., May 13, 2016.

Gentlemen:

In accordance with the provisions of Section 103D-310, Hawaii Revised Statutes and Hawaii Administrative Rules 3-122-111, it is the intention of the undersigned to bid on IFB No. IFB-16-HHL-014, SCATTERED LOT IMPROVEMENTS FOR FIVE (5) KEAUKAHA LOTS IN TRACT 1 WAIAKEA, SOUTH HILO, COUNTY OF HAWAII, STATE OF HAWAII, for which bids will be opened on **2:00 p.m., May 23, 2016.**

_____	_____
Name of Firm	Contractor's License No.
_____	_____
Address	Hawaii General Excise Tax No.
_____	_____
City, State and Zip Code	Telephone No. / Facsimile No.
	_____
	E-mail address

Respectfully submitted,

_____
Signature

_____
Print Name and Title

Date: _____

Gentlemen:

The Department of Hawaiian Home Lands acknowledges on this date above, your Notice of Intention to Bid on IFB-16-HHL-014.

_____
Jobie M. K. Masagatani, Chairman
Hawaiian Homes Commission

SAMPLE

STATE OF HAWAII

STANDARD

QUALIFICATION QUESTIONNAIRE

FOR

OFFERORS

issued by the

PROCUREMENT POLICY BOARD

STATE OF HAWAII

June 16, 2003

To be filed with the procurement officer calling for offers

in accordance with Section 103D-310, HRS, as amended.

Submitted By _____

Address _____

Date

_____

STANDARD QUALIFICATION QUESTIONNAIRE

COVERING EXPERIENCE, EQUIPMENT AND FINANCIAL STATEMENT OF OFFERORS. THE OFFICER CALLING FOR OFFERS MAY REQUIRE THE OFFEROR TO FURNISH ADDITIONAL INFORMATION NOT SPECIFICALLY COVERED HEREIN. ALL ITEMS MUST BE ANSWERED AND OMISSIONS MAY BE CONSIDERED GOOD CAUSE FOR UNFAVORABLE CONSIDERATION.

GENERAL INFORMATION

1. The statements contained in this Questionnaire are being furnished for consideration in submitting an offer for the following project:

   (a) Project Title _____

   (b) Location _____

   (c) Bid Opening Date _____

2. The Questionnaire is being submitted in behalf of:

   (a) Name of Offeror_____

   ☐ A Corporation
   ☐ A Partnership
   ☐ An Individual
   ☐ A Joint-Venture

   (b) Address _____

   (c) Telephone No. _____

   (d) Date Submitted _____

3. If the bid is submitted by a joint venture, composed of two or more individual firms, then each member firm comprising the joint venture must submit all information listed on pages 3 through 16, inclusive, of the Questionnaire and, in addition, answer the following:

   (a) Members of joint Venture _____

   (b) Date of Joint Venture Agreement _____

   (c) Is agreement between members comprising the joint venture joint and several liability? _____
   If not, state the terms of agreement in this respect: _____
   _____
   _____
   _____

EXPERIENCE QUESTIONNAIRE

Submitted by _____

☐ A Corporation
☐ A Partnership
☐ An Individual

Principal Office _____

The signatory of this questionnaire guarantees the truth and accuracy of all statements and of all answers to interrogatories hereinafter made

1. How many years has your organization been in business as a [General Contractor] under your present business name? _____

2. How many years experience in [construction] _____ has your organization had: (A) as a [General Contractor]_____; (B) as a [Sub-Contractor] _____

3. Show what [construction] projects your organization has completed in the past five (5) years in the following tabulation:

Contract Amt.	Class of Work	When Completed	Name and Address of Owner

4. Have you ever failed to complete any work awarded to you? _____ If so, state when, where and why? _____
_____
_____
_____

5. Has any officer or partner of your organization in the past five (5) years been an officer or partner of some other organization that failed to complete a contract? If so, state name of individual, other organization and reason therefore _____
_____
_____
__

6. Has any officer or partner of your organization in the past five (5) years failed to complete a contract handled in his own name? _____ If so, state name of individual, name of Owner and reason therefore.
_____
_
_____
_____
__

7. In what other lines of business are you financially interested? _____
_____
_____
_____
___

8. For what corporations or individuals in the past five (5) years have you performed work, and to whom do you refer? _____
_____
_____
_____
_____
_____
_____

9. For what counties within the State of Hawaii have you performed work and to whom do you refer?
_____
_____
_____
_____
_____
_____
_____

10. For what Bureaus or Departments of the State government have you performed work and to whom do you refer?
_____
_____
_____
_____
_____
_____
_____

11. Have you performed work for the U. S. Government? _____ If so, when and to whom do you refer?
_____
_____
_____
_____
_____
_____

12. Have you ever performed any work for any other governmental agencies outside the State of Hawaii? _____ If so, when and to whom do you refer? _____

_____
_____
_____
_____
_____
_____

13. What is the [construction] experience of the principal individuals of your organization?

Individual's Name	Present Position or Office	Years of Work Experience	Magnitude and Type of Work	In What Capacity?

EQUIPMENT QUESTIONNAIRE

Submitted by _____

☐ A Corporation
☐ A Partnership
☐ An Individual

Principal Office _____

The signatory of this questionnaire guarantees the truth and accuracy of all statements and of all answers to interrogatories hereinafter made

1. In what manner have you inspected this proposed work? Explain in detail. _____
   _____
   _____
   _____

2. Explain your plan or layout for performing the proposed work. _____
   _____
   _____
   _____
   _____
   _____
   _____
   _____
   _____
   _____
   _____
   _____
   _____
   _____
   _____
   _____

3. The work, if awarded to you, will have the personal supervision of whom?
   _____
   _____

4. Do you intend to do the hauling on the proposed work with your own force? _____ If so, give amount and type of equipment to be used. _____
   _____
   _____

5. If you intend to sublet the hauling or perform it through an agent, state amount of sub-contract or agent's contract, and, if known, the name and address of sub-contractor or agent, amount and type of his equipment and financial responsibility _____
   _____
   _____
   _____
   _____
   _____

6. Do you intend to do grading on the proposed work with your own forces? _____ If so, give type of equipment to be used _____
   _____
   _____

7. If you intend to sublet the grading or perform it through an agent, state amount of sub-contract or agent's contract, and, if known, the name and address of sub-contractor or agent, amount and type of his equipment and financial responsibility _____
_____
_____
_____
_____
_____
_____

8. Do you intend to sublet any other portions of the work? _____ If so, state -amount of sub-contract, and, if known, the name and address of the sub-contractor, amount and type of his equipment and financial responsibility _____
_____
_____
_____
_____
_____
_____
_____
_____

9. From which sub-contractors or agents do you expect to require a bond? _____
_____
_____
_____
_____
_____
_____

10. What equipment do you own that is available for the proposed work?

Quantity	Item	Description, Size, Capacity, Etc.	Condition	Years of Service	Present Location

11. What equipment do you intend to purchase for use on the proposed work, should the contract be awarded to you?

Quantity	Item	Description, Size, Capacity, Etc.	Approximate Cost

12. How and when will you pay for the equipment to be purchased? _____
_____
_____

13. Do you propose to rent any equipment for this work? _____ If so, state type, quantity and reasons for renting_____
_____
_____
_____
_____
_____
_____
_____

FINANCIAL STATEMENT

Submitted by _____ ☐ A Corporation ☐ A Partnership ☐ An Individual

Principal Office _____

The signatory of this questionnaire guarantees the truth and accuracy of all statements and of all answers to interrogatories hereinafter made

BALANCE SHEET

As of _____, 20_____

Assets

Current assets:	
Cash and cash equivalents (1)	$ _____
Short-term investments (2)	_____
Accounts receivable, net (3)	_____
Inventories (4)	_____
Costs and estimated earnings in excess of billings on uncompleted contracts (5)	_____
Prepaid expenses and other (6)	_____
Sub-Total Current Assets	_____
Property and equipment:	
Land (7)	_____
Buildings (8)	_____
Vehicles, machinery and equipment (9)	_____
Furniture and fixtures (10)	_____
Less accumulated depreciation	(_____)
Sub-Total Net Property and Equipment	_____
Other assets:	
Cash surrender value of life insurance policies (11)	_____
Deposits and other (12)	_____
Sub-Total Other Assets	_____
Total Assets:	$ _____

BALANCE SHEET (Continued)

Liabilities and Stockholder's Equity

Current liabilities:	
Current portion of long-term debt (1)	$ _____
Accounts payable (2)	_____
Billings in excess of costs and estimated earnings on uncompleted contracts (3)	_____
Accrued liabilities and other (4)	_____
Sub-Total Current Liabilities	_____
Long-term debt, net of current portion (5)	_____
Sub-Total Liabilities & Long-term Debt:	$ _____
Stockholder's equity:	
Capital stock (6)	_____
Additional paid-in capital (7)	_____
Retained earnings	_____
Treasury stock (8)	(_____)
Sub-Total Stockholder's Equity	$ _____
Total Liabilities and Stockholder's Equity	$ _____

DETAILS RELATIVE TO ASSETS

(1) Cash and cash equivalents:

Financial Institution	Type of Account	Amount
		$
		$

(2) Short-term investments:

Type of Security	Cost	Unrealized Gains	Unrealized Losses	Estimated Fair Value
	$	$	$	$
	$	$	$	$

(3) Accounts receivable (list major debtors):

Completed contracts

Name	Description	Completion Date	Contract Amount	Amount Receivable
		$	$	$
		$	$	$

Other than completed contracts

Name	Description	Due Date	Amount Receivable
Less allowance for doubtful accounts			( )
			$

(4) Inventories

Description	Cost	Market Value	Lower of Cost or Market Value
	$	$	$
	$	$	$

DETAILS RELATIVE TO ASSETS (Continued)

(5) Costs and estimated earnings in excess of billings on uncompleted contracts

Name	Description	Completion Date	Contract Amount	Costs and Estimated Earnings to Date	Billings to Date	Costs and Estimated Earnings in Excess of Billings
			$	$	$	$
			$	$	$	$

(6) Prepaid expenses and other

Description	Amount
	$
	$

(7) Land

Description	Location	Amount
		$
		$

(8) Buildings

Description	Location	Amount
		$
		$

(9) Vehicles, machinery and equipment

Description	Amount
	$
	$

(10) Furniture and fixtures

Description	Amount
	$
	$

DETAILS RELATIVE TO ASSETS (Continued)

(11) Cash surrender value of life insurance policies

Key Employee	Insurance Company	Policy Amount	Paid-Up Additional Insurance	CSV Amount
		$	$	$
Less loans payable				( )
		$	$	$

(12) Deposits and other

Description	Amount
	$
	$

DETAILS RELATIVE TO LIABILITIES AND STOCKHOLDER'S EQUITY

(1) Current portion of long-term debt (maturing within 12 months)

Lender	Description	Security Pledged	Due Date	Amount
				$
				$

(2) Accounts payable (list major creditors)

Name	Past Due Amount	Amount
	$	$
	$	$

(3) Billings in excess of costs and estimated earnings on uncompleted contracts

Name	Description	Completion Date	Contract Amount	Costs and Estimated Earnings to Date	Billings to Date	Billings in excess of costs and Estimated Earnings
			$	$	$	$
			$	$	$	$

(4) Accrued liabilities and other

Description	Amount
	$
	$

(5) Long-term debt, net of current portion

Lender	Description	Security Pledged	Due Date	Amount
				$
				$

DETAILS RELATIVE TO LIABILITIES AND STOCKHOLDER'S EQUITY (Continued)

(6) Capital stock

Type of Stock	Class	No. of Shares Authorized	No. of Shares Issued and Outstanding	Par Value	Amount
				$	$
					$

(7) Additional paid-in capital

Description	Amount
	$
	$

(8) Treasury stock

Type of Stock	Class	No. of Shares	Cost
			$
			$

STATEMENTS OF INCOME AND RETAINED EARNINGS

For the Years Ended _____, 20____ and 20 ____

	20____	20____
Contract revenues	$ _____	$ _____
Costs of contracts	_____	_____
Gross income from contracts		
General and administrative expenses	_____	_____
Income from operations		
Other income (expense)	_____	_____
Income before income taxes		
Income taxes	_____	_____
Net income		
Retained earnings, beginning of the year	_____	_____
Retained earnings, end of the year	$ _____	$ _____

If a corporation, answer this:	If a partnership, answer this:	
Capital paid in cash, $ _____	Date of organization _____	
When Incorporated _____	Date registered in Hawaii _____	
In what State _____	State whether partnership is general or limited _____	
Date registered in Hawaii _____	_____	
President's name _____	Name and address of partners:	Age
Vice-President's name _____	_____	_____
Secretary's name _____	_____	_
Treasurer's name _____	_____	_____
		_
		_____
		_

The undersigned hereby declares: that the foregoing is a true statement of the financial condition of the individual, partnership or corporation herein first named, as of the date herein first given; that this statement is for the express purpose of inducing the party to whom it is submitted to award the offeror a contract; and that any depository, vendor or other agency herein named is hereby authorized to supply such party with any information necessary to verify this statement.

_____

_____

_____

_____

NOTE: A partnership must give firm name and signatures of all partners. A corporation must give full corporate name, signature of official, and affix corporate seal.

Affidavit for Individual

STATE OF HAWAII

COUNTY OF_____

_____ being duly sworn, deposes and says that the foregoing financial statement, taken from his books, is a true and accurate statement of his financial condition as of the date thereof and that the answers to the foregoing interrogatories are true.

_____
(Applicant must also sign here)

Sworn to before me this
_____ day of _____ 20_____

_____
Notary Public

Affidavit for Partnership

STATE OF HAWAII

COUNTY OF_____

_____ being duly sworn, deposes and says that he is a member of the firm of _____; and that he is familiar with the books of the said firm showing its financial condition: that the foregoing financial statement, taken from the books of the said firm, is a true and accurate statement of the financial condition of the said firm as of the date thereof and that the answers to the foregoing interrogatories are true.

_____
(Members of firm must also sign here)

Sworn to before me this
_____ day of _____20_____

_____
Notary Public

Affidavit for Corporation

STATE OF HAWAII
COUNTY OF _____

_____ being duly sworn, deposes and says that he is _____ of the _____, the corporation described in and which executed the foregoing statement; that he is familiar with the books of the said corporation showing its financial condition; that the foregoing financial statement, taken from the books of the said corporation, is a true and accurate statement of the financial condition of said corporation as of the date thereof and that the answers to the foregoing interrogatories are true.

_____
(Officer must also sign here)

Sworn to before me this
_____ day of _____ 20_____

_____
Notary Public

Instructions for Bid Submittal

General Instructions for Bid Submittal

The bid offer form must be completed and submitted to the DHHL by the required due date and time, and in the form prescribed by the DHHL. Electronic mail and facsimile transmissions shall not be accepted.

For your convenience, an "IFB Checklist for Bidders" is included in this section for your use.

No supplemental literature, brochures or other unsolicited information should be included in the bid packet.

A written response is required for each item unless indicated otherwise.

Bid documents and all certifications should be written legibly or typed and completed with black ink.

I. PROPOSAL REQUIREMENTS AND CONDITIONS

A. QUALIFICATION OF BIDDERS.

Prospective Bidders must be capable of performing the work for which bids are invited, and must be capable of entering into a public contract of $25,000 (twenty five thousand dollars) or more.

B. NOTICE OF INTENTION TO BID

1. In accordance with Section 103D-310, Hawaii Revised Statutes, and Section 3-122-108, Hawaii Administrative Rules, a written notice of intention to bid must be submitted to the Chairman, who is the officer charged with letting the contract. The notice may be faxed, hand carried or mailed to the office indicated in the Notice to Contractors.

2. The written notice must be received by the office indicated in the Notice to Contractors no later than 2:00 p.m. on the 10th calendar day prior to the day designated for opening bids. If the 10th calendar day prior to the day designated for opening bids is a Saturday, Sunday, or legal State holiday, then the written notice must be received by the Department no later than 2:00 p.m. on the last working day immediately prior to said Saturday, Sunday, or legal State holiday. The written notice will be time stamped when received by said office. The time designated by the time stamping device in said office shall be official. If the written notice is hand carried, then the bearer is responsible to ensure that the notice is time stamped by said office. If the notice is faxed, the time of receipt by the Department fax machine shall be official.

3. It is the responsibility of the prospective Bidder to ensure that the written notice of intention to bid is received in time and the Department assumes no responsibility

for failure of timely delivery caused by the prospective Bidder or by any method of conveyance chosen by the prospective Bidder.

4. If two (2) or more prospective Bidders desire to bid jointly as a joint venture on a single project, they must file an affidavit of joint venture with their notice of intention to bid. Such affidavit of joint venture will be valid only for the specific project for which it is filed. No further license is required when all parties to the joint venture possess current and appropriate contractor's licenses. Joint ventures are required to be licensed in accordance with Chapter 444 of the Hawaii Revised Statutes, as amended, and the rules and regulations of the Contractor's License Board when any party to the joint venture agreement does not hold a current or appropriate contractor's license. The joint venture must have registered with the office of the Director of Commerce and Consumer Affairs in accordance with Chapter 425 of the Hawaii Revised Statutes, as amended.

5. No persons, firm or corporation may bid where (1) the person, firm, or corporation, or (2) a corporation owned substantially by the person, firm, or corporation, or (3) a substantial stockholder or an officer of the corporation, or (4) a partner or substantial investor in the firm is in arrears in any payment owed to the State of Hawaii or any of its political subdivisions or is in default of any obligation to the State of Hawaii or to all or to any of its political subdivisions, including default as a surety or failure to perform faithfully and diligently any previous contract with the Department.

C. STANDARD QUALIFICATION QUESTIONNAIRE FOR OFFERORS

1. Prospective Bidders shall submit answers to questions contained in the STANDARD QUALIFICATION QUESTIONNAIRE FOR OFFERORS (SPO Form-21), properly executed and notarized, setting forth a complete statement of the experience of such prospective Bidder and its organization in performing similar work and a statement of the equipment proposed to be used, together with adequate proof of the availability of such equipment, no later than 2:00 p.m. on the tenth calendar day prior to the day designated for opening bids. If the tenth calendar day prior to the day designated for opening bids is a Saturday, Sunday, or legal State holiday, then the questionnaire must be received by the Department no later than 4:00 p.m. on the last working day immediately prior to said Saturday, Sunday, or legal State holiday. The questionnaire will be time stamped when received by said office. The time designated by the time stamping device in said office shall be official. If the questionnaire is hand carried, then the bearer is responsible to ensure that the notice is time stamped by said office. E-mail and facsimile (FAX) transmissions are not acceptable in whole or in part, under any circumstances. If the information in the questionnaire proves satisfactory, the Bidder's proposal will be received. All information contained in the answers to the questionnaire shall be kept confidential. The questionnaire will be returned to the Bidder after it has served its purpose.

2. If upon review of the Questionnaire, or otherwise, the Bidder appears not fully qualified or able to perform the intended work, the Chairman shall, after affording the Bidder an opportunity to be heard and if still of the opinion that the Bidder is not fully qualified to perform the work, refuse to receive or to consider any bid offered by the prospective Bidder.

3. Failure to complete and submit the prequalification questionnaire by the designated deadline will be sufficient cause for the Department to disqualify a prospective Bidder.

D. PROPOSAL FORM

1. Prospective Bidders are being furnished with the proposal form giving the location, description, and the contract time of the work contemplated for which a lump sum bid price is asked or containing a schedule of items, together with estimated quantities of work to be performed and materials to be furnished, for which unit bid prices and/or lump sum bid prices are asked.

2. All papers bound with or attached to the proposal form shall be considered a part thereof and shall not be detached or altered when the proposal is submitted.

3. The drawings, specifications and other documents designated in the proposal form will also be considered a part thereof whether attached or not.

4. When quantities for individual items of work are listed in the proposal form for which respective unit prices are asked, said quantities are estimated or approximate and are to be used by the Department only for the purpose of comparing on a uniform basis bids offered for the work. The Department does not, expressly or by implication agree that the actual quantity of work will correspond therewith.

5. On unit price bids, payment will be made only for the actual number of units incorporated into the finished project at the unit price bid, subject to DHHL Construction General Conditions (CGC), Section 4.7, VARIATIONS IN ESTIMATED QUANTITIES.

6. The Bidder's proposal must be submitted on the proposal form furnished by the Department. The proposal must be prepared in full accordance with the instructions herein. The Bidder must state, both in words and numerals, the lump sum price or total sum bid at which the work contemplated is proposed to be done. These prices must be written in ink or typed. In case of a discrepancy between the prices written in words and those written in figures, the words shall govern over the figures. The Bidder shall sign the proposal in the spaces provided with ink.

7. If the proposal is made by an individual, the person's name and post office address must be shown in the space provided. If made by a partnership, the name and post office address of each member of the partnership must be shown and the proposal signed by all partners or evidence in the form of a partnership agreement must be submitted showing the authority of the partner to enter, on behalf of said

partnership, into contract with the Department. If made by a corporation the proposal must show the name, title and business address of the president, secretary and treasurer and also evidence in the form of a corporate resolution must be submitted showing the authority of the particular corporate representative to enter on behalf of said corporation into contract with the Department. If made by a joint-venture the name and post office address of each member of the individual firm, partnership or corporation comprising the joint-venture must be shown with other pertinent information required of individuals, partnerships or corporations as the case may be. The proposal must be signed by all parties to the joint-venture or evidence in the form of a Joint-Venture Agreement must be submitted showing the authority of the joint-venture's representative to enter on behalf of said joint-venture into contract with the Department.

8. Pursuant to the requirements of Section 103D-302, HRS, each Bidder shall include in its bid the name of each person or firm to be engaged by the Bidder on the project as joint contractor or subcontractor indicating also the nature and scope of work to be performed by such joint contractor and/or subcontractor and their respective contractor's license number. A joint contractor or subcontractor performing less than or equal to one percent of the total bid amount is not required to be listed in the proposal. The Bidder shall be solely responsible for verifying that their joint contractor or subcontractor has the proper license at the time of the submitted bid.

9. It is understood and agreed that the Contractor shall make no claim for anticipated profit, loss of profit or unabsorbed field, branch or home office overhead and impact losses due to the exercise of the Departments right to eliminate entire portions of the work or to increase or decrease any or all the quantities shown in the proposal form.

10. By submitting a bid on the proposal form, a Bidder accepts the language therein as its own.

E BID SECURITY

1. Subject to the exceptions in Section 3-122-223(d) HAR, all lump sum bids of $50,000 (fifty thousand dollars) and higher, or lump sum base bids including alternates of $50,000 (fifty thousand dollars) and higher, that are not accompanied by bid security are non-responsive. Bid security shall be one of the following: §3-122-222(a) HAR

   a. Surety bid bond underwritten by a company licensed to issue bonds in this State which shall be substantially in the form of the Surety Bid Bond form in Procurement Circular No. 2007-05; or

   b. Legal Tender; or

   c. Certificate of Deposit; credit union share certificate; or cashier's, treasurer's, teller's or official check drawn by, or a certified check accepted

by, and payable on demand to the State by a bank, a savings institution, or credit union insured by the Federal Deposit Insurance Corporation or the National Credit Union Administration.

(a) These instruments may be utilized only to a maximum of $100,000 (one hundred thousand dollars).

(b) If the required security or bond amount totals over $100,000 (one hundred thousand dollars), more than one instrument not exceeding $100,000 (one hundred thousand dollars) each and issued by different financial institutions shall be accepted.

(c) CAUTION - Bidders are cautioned that certificates of deposit or share certificates with an early withdrawal penalty must have a face value sufficient to cover the maximum penalty amount in addition to the proposal guaranty requirement. If the certificate is made out to two names, the certificate must be assigned unconditionally to the Chairman.

2. Unless otherwise stated, the bid security shall be in an amount equal to at least five percent (5%) of the lump sum bid or lump sum base bid including all additive alternates or in an amount required by the terms of the federal funding, where applicable.

3. If the Bidder is a corporation, evidence in the form of a corporate resolution, authorizing the corporate representative to execute the bond must be submitted with the proposal. (See sample in Appendix.) If the Bidder is a partnership, all partners must sign the bond or evidence in the form of a partnership agreement must be submitted showing the authority of the partner.

4. If the Bidder is a joint-venture, all parties to the joint-venture must sign the bond; provided, that one party to the joint-venture may sign on behalf of the joint-venture if evidence in the form of a joint-venture agreement or power of attorney, is submitted showing the authority of the signatory to sign the bond on behalf of the joint-venture.

5. In the case where the award will be made on a group or item basis, the amount of bid security shall be based on the total bid for all groups or items submitted.

6. Bidders are cautioned that surety bid bonds which place a limit in value to the difference between the bid amount and the next acceptable bid, such value not to exceed the purported amount of the bond, are not acceptable. Also, surety bid bonds which place a time limit on the right of the State to make claim other than allowed by statutes or the GENERAL CONDITIONS are not acceptable. Bidders are hereby notified that a surety bid bond containing such limitation(s) is not acceptable and a bid accompanied by such surety bid bond will be automatically rejected.

F. BIDDER'S RESPONSIBILITY FOR EXAMINATION OF CONTRACT DOCUMENTS, SITE OF WORK, ETC.

The Bidder shall carefully examine the project site contemplated all Contract Documents and any documents or items referenced therein and contract and bond forms therefore. The submission of a bid shall be considered as a warranty that the Bidder has made such examination and is informed of the conditions to be encountered in performing the Work and of the requirements of the Contract Documents and any documents and items referenced therein, and contract and bonds.

G. ADDENDA AND BID CLARIFICATIONS

1. The terms and requirements of the bid documents (i.e. drawings, specifications and other bid and contract documents) cannot be changed prior to the bid opening except by a duly issued addendum.

2. The Department may alter, increase or decrease the scope of the work or the contract time, provisions and conditions by issuing a written addendum which sets forth such alterations, increase or decrease.

3. If a Bidder discovers what it considers to be a discrepancy, ambiguity, omission or doubt as to the meaning of drawings, specifications and any other bid or contract documents, the Bidder shall request in writing an interpretation from the Chairman.

4. If the Department agrees that a discrepancy, ambiguity, omission or doubt exists, it shall issue a written addendum to the bid documents to all prospective Bidders at the respective offices furnished for such purposes eight (8) days before the bids are opened. The Department may extend the bid opening to allow at least eight (8) days from the notification date of the addendum. Upon notification by the Department, all Bidders/addressees shall be deemed to be on notice of the information therein whether or not the addendum is actually received. All addenda so issued shall become part of the contract documents.

5. No claim for additional compensation and/or time for performance will be allowed if the Contractor discovered, or in the exercise of reasonable care, should have discovered a discrepancy, ambiguity, omission or doubt for which an interpretation was not requested.

H. SUBSTITUTION OF MATERIALS AND EQUIPMENT BEFORE BID OPENING

1. Brand names of materials or equipment are specified or shown on the drawings to indicate a quality, style, appearance or performance and not to limit competition. The Bidder shall base its bid on one of the specified brand names unless alternate brands are qualified as equal or better in an addendum. Qualifications of such proposed alternate brands shall be submitted in writing and addressed to the Project Manager. The face of the envelope containing the request must be clearly marked "SUBSTITUTION REQUEST". The request may be hand carried or mailed to DHHL, 91-5420 Kapolei Parkway, Kapolei, Hawaii, 96707. In either case, the

written request must be received by DHHL no later than fourteen (14) days before the bid opening date and time specified in the Notice to Bidders. The written request will be time stamped by DHHL. For the purpose of this section, the time designated by the time stamping device in DHHL shall be official. If the written request is hand carried, the bearer is responsible to ensure that the request is time stamped by DHHL.

2. Submit three (3) sets of the written request, technical brochures, and a statement of variances. Refer to the Appendix for the Sample "Request for Substitution."

3. A statement of variances must list all features of the proposed substitution which differ from the drawings, specifications and/or product(s) specified and must further certify that the substitution has no other variant features. The brochure and information submitted shall be clearly marked showing make, model, size, options, etc., and must include sufficient evidence to evaluate each feature listed as a variance. A request will be denied if submitted without sufficient evidence. If after installing the substituted product, an unlisted variance is discovered, Contractor shall immediately replace the product with a specified product at no cost to the Department.

4. Any substitution request not complying with the above requirements will be denied. Substitution requests sent to other agencies and received by Project Manager after the deadline above will be denied.

5. An addendum shall be issued to inform all prospective Bidders of any accepted substitution.

I. DELIVERY OF PROPOSALS.

The entire proposal shall be placed together with the bid security, in a sealed envelope and delivered as indicated in the Notice to Contractors. Bids which do not comply with this requirement may not be considered. Proposals will be received up to the time fixed in the public notice for opening of bids and must be in the hands of the official by the time indicated. The time designated by the time stamping device in DHHL shall be official.

J. WITHDRAWAL OR REVISION OF PROPOSAL. Proposal may be modified prior to the deadline to submit the proposal by any of the following documents:

1 Withdrawal of Proposals:

(a) A signed, written notice received in the office designated in the solicitation; or

(b) A signed written notice faxed to the office designated in the solicitation.

2 Modification of Proposals:

(a) A signed written notice received in the office designated in the solicitation, accompanied by a duly executed certificate of resolution for corporations,

partnerships and joint-ventures, stating that a modification to the proposal is submitted; and

(b) The actual modification sealed securely in a separate envelope or container, accompanying the written notice.

K. PUBLIC OPENING OF PROPOSALS.

Proposals will be opened and read publicly at the time and place indicated in the Notice to Contractors. Bidders, their authorized agents and other interested parties are invited to be present.

L. DISQUALIFICATION OF BIDDERS. Any one or more of the following causes will be considered as sufficient for the disqualification of a Bidder and the rejection of its proposal or proposals:

1. Non-compliance with Section I.A. QUALIFICATION OF BIDDERS;

2. Evidence of collusion among Bidders;

3. Lack of responsibility and cooperation as shown by past work such as failing to complete all of the requirements to close the project within a reasonable time or engaging in a pattern of unreasonable or frivolous claims for extra compensation;

4. Being in arrears on existing contracts with the State of Hawaii, or having defaulted on a previous contract with the State of Hawaii;

5. Lack of proper equipment and/or sufficient experience to perform the work contemplated, as revealed by the Standard Questionnaire and Financial Statement for Bidders;

6. No contractor's license or a contractor's license which does not cover type of work contemplated;

7. More than one proposal for the same work from an individual, firm, partnership, corporation or joint venture under the same or different name;

8. Delivery of bids after the deadline specified in the advertisement calling for bids;

9. Failure to pay, or satisfactorily settle, all bills overdue for labor and materials of former contracts in force at the time of issuance of proposal forms; and/or

10. Debarment or suspension pursuant to the provisions of Chapters 103D, 104 and 444, Hawaii Revised Statutes, as amended.

M. PROTESTS

1. Protests shall be governed by Section 103D-701, Hawaii Revised Statutes, and amended hereafter, and its implementing rules set forth in Title 3, Chapter 126, Subchapter 1, of the Hawaii Administrative Rules, and as amended hereafter.

2. The Chairman is the Department's chief procurement officer to whom protests shall be addressed unless specified otherwise in the solicitation.

N. WRONGFUL REFUSAL TO ACCEPT A BID.

In the event the Chairman, for any reason, wrongfully refuses to accept what would otherwise be a responsive and responsible lowest bid, the exclusive remedy for such lowest Bidder shall be the recovery of the reasonable actual costs of preparing the bid. No other Bidder shall have any claim for damages.

II AWARD AND EXECUTION OF CONTRACT

A. CONSIDERATION OF PROPOSALS; CANCELLATION.

After the proposals are opened and read, the figures will be extended and/or totaled in accordance with the bid prices of the acceptable proposals and the totals will be compared and the results of such comparison shall be made public. In the event of a tie bid, the low Bidder shall be determined by lot. In the comparison of bids, words written in the proposals will govern over figures and unit prices will govern over totals. Until the award of the contract, the Department may cancel the solicitation, reject any and all proposals in whole or part and may waive any defects or technicalities whenever such action is deemed to be in the best interest of the Department.

B. IRREGULAR PROPOSALS.

Proposals will be considered irregular and may be rejected for the following reasons:

1. If the proposal is unsigned.

2. If bid security is not in accordance with Section I.E. BID SECURITY.

3. If proposal is on a form other than that furnished by the Department; or if the form is altered or any part thereof detached.

4. If the proposal shows any non-compliance with applicable law, alteration of form, additions not called for, conditional bids, incomplete bids, non-initialed erasures, other defects, or if the prices are obviously unbalanced.

5. If the Bidder adds any provisions reserving the right to accept or reject an award.

6. If the Bidder adds any provisions reserving the right to enter into a contract pursuant to an award.

7. When a proposal is signed by an officer or officers of a corporation and a currently certified corporate resolution authorizing such signer(s) to submit such proposal is

not submitted with the proposal or when the proposal is signed by an agent other than the officer or officers of a corporation or a member of a partnership and a power of attorney is not submitted with the proposal.

8. Where there is an incomplete or ambiguous listing of joint contractors and/or subcontractors the proposal may be rejected. All work which is not listed as being performed by joint contractors and/or subcontractors must be performed by the Bidder with its own employees. Additions to the list of joint contractors or subcontractors will not be allowed. Whenever there is a doubt as to the completeness of the list, the Bidder will be required to submit within five (5) working days, a written confirmation that the work in question will be performed with its own work force. Whenever there is more than one joint contractor and/or subcontractor listed for the same item of work, the Bidder will be required to either confirm in writing within five (5) working days that all joint contractors or subcontractors listed will actually be engaged on the project or obtain within five (5) working days written releases from those joint contractors and/or subcontractors who will not be engaged.

9. If in the opinion of the Chairman, the Bidder and/or its listed subcontractors do not have the contractor's licenses or combination of contractor's licenses necessary to complete all of the work.

C. CORRECTION OF BIDS AND WITHDRAWAL OF BIDS (§3-122-31 HAR)

1. Corrections to bids after bid openings but prior to award may be made under the following conditions:

   (a) If the mistake is attributable to an arithmetical error, the Chairman shall so correct the mistake. In case of error in extension of bid price, the unit price shall govern.

   (b) If the mistake is a minor informality which shall not affect price, quantity, quality, delivery, or contractual conditions, the Bidder shall request correction by submitting proof of evidentiary value which demonstrates that a mistake was made. The Chairman shall prepare a written approval or denial in response to this request. Examples of such mistakes include:
      (1) Typographical errors;
      (2) Transposition errors;
      (3) Failure of a Bidder to sign the bid, but only if the unsigned bid is accompanied by other material indicating the Bidder's intent to be bound.

   (c) For reasons not allowable under Subsections II.C.1.(a) and II.C.1.(b) when the Chairman determines that the correction or waiver of an obvious mistake is in the best interest of the Department or is warranted for the fair treatment of other Bidders.

2. Withdrawal of bids after bid opening but prior to award may be made when the bid contains a mistake attributable to an obvious error which affects price, quantity, quality, delivery, or contractual conditions, and the Bidder requests withdrawal by submitting proof of evidentiary value which demonstrates that a mistake was made. The Chairman shall prepare a written approval or denial in response to this request.

3. Correction or withdrawal of bids after award is not permissible except in response to a written withdrawal or correction request by the Contractor, and the Chairman makes a written determination that the Department's procurement practices and policies would not be materially affected by such correction or withdrawal.

D. AWARD OF CONTRACT

1. The award of contract, if it be awarded, will be made within one hundred twenty (120) consecutive calendar days after the opening of the proposals to the lowest responsible and responsive Bidder (including the alternate or alternates which may be selected by the Chairman in the case of alternate bids) whose proposal complies with all the requirements prescribed, but in no case will an award be made until all necessary investigations are made. The successful Bidder will be notified, by letter mailed to the address shown on the proposal, that its bid has been accepted and that it has been awarded the contract.

2. If the contract is not awarded within the one hundred twenty (120) days noted in Subsection II.D.1 above, the Department may request the successful Bidder to extend the time for the acceptance of its bid. The Bidder may reject such a request without penalty; and in such case, the Department may at its sole discretion make a similar offer to the next lowest responsive and responsible Bidder and so on until a bid is duly accepted or until the Department elects to stop making such requests.

3. No contract will be awarded to any person or firm suspended or debarred under the provisions of Chapters 103D, 104 and Chapter 444, Hawaii Revised Statutes as amended.

4. The contract will be drawn on the forms furnished by the Chairman. The contract will not be binding on the Department until all required signatures have been affixed thereto and written certification that funds are available for the work has been made.

5. Prior to award of the contract, the Department shall verify compliance with Sections 103D-310 and 103D-328 HRS via Hawaii Compliance Express (HCE).

E. CANCELLATION OF AWARD.

The Department reserves the right to cancel the award of any contract at any time before the execution of said contract by all parties. The exclusive remedy to the awardee for such cancellation shall be payment of the reasonable bid preparation costs and the reimbursement of any direct expenses incurred as directed in the Notice of Award. Such cancellation will not incur any liability by the Department to any other Bidder.

F. RETURN OF BID SECURITY.

All bid securities, except those of the four (4) lowest Bidders, will be returned following the opening and checking of the proposals. The retained bid securities of the four lowest Bidders will be returned within five (5) working days following the complete execution of the contract.

G. REQUIREMENT OF PERFORMANCE AND PAYMENT BONDS

1. Performance and Payment Bonds shall be required for contracts $50,000 (fifty thousand dollars) and higher. At the time of the execution of the contract, the successful Bidder shall file good and sufficient performance and payment bonds on the form furnished by the Department, each in an amount equal to one hundred percent (100%) of the amount of the contract price unless otherwise stated in the solicitation of bids. Acceptable performance and payment bonds shall be limited to the following:

2 Surety bonds underwritten by a company licensed to issue bonds in this State; or

3. A certificate of deposit; credit union share certificate; or cashier's, treasurer's, teller's or official check drawn by, or a certified check accepted by, and payable on demand to the Department by a bank, a savings institution, or credit union insured by the Federal Deposit Insurance Corporation or the National Credit Union Administration.

   (a) These instruments may be utilized only a maximum of $100,000 (one hundred thousand dollars).

   (b) If the required security or bond amount totals over $100,000 (one hundred thousand dollars), more than one instrument not exceeding $100,000 (one hundred thousand dollars) each and issued by different financial institutions shall be acceptable.

4. If the Contractor fails to deliver the required performance and payment bonds, the Contractor's award shall be canceled, the Department shall have the remedies provided below under FAILURE TO EXECUTE THE CONTRACT and award of the contract shall be made to the next lowest responsible and responsive Bidder.

H. EXECUTION OF THE CONTRACT

1. The contract shall be signed by the successful Bidder and returned, together with satisfactory performance and payment bonds, within ten (10) calendar days after the Bidder is awarded the contract for execution or within such further time as the Chairman may allow. No proposal or contract shall be considered binding upon the Department until the contract has been fully and properly executed by all parties thereto. For projects funded with State Capital Improvement Project (CIP) funds, the Chairman shall also endorse thereon its certificate, as required by Section 103D-309, HRS, that there is an available unexpended appropriation or balance of an appropriation over and above all outstanding contracts sufficient to cover the Department's amount required by such contract.

2. On any individual award totaling less than $25,000 (twenty five thousand dollars), the Department reserves the right to execute the contract by the issuance of a Purchase Order. Issuance of a Purchase Order shall result in a binding contract between the parties without further action by the Department. The issuance of a Purchase Order shall not be deemed a waiver of the General Conditions, and Contract Document requirements.

I. FAILURE TO EXECUTE THE CONTRACT

1. Before the Award. If a low Bidder without legal justification withdraws its bid after the opening of bids but before the award of the contract, the Department shall be entitled to retain as damages the amount established as bid security, and may take all appropriate actions to recover the damages sum from the property or third-party obligations deposited as bid security.

2. After the Award. If the Bidder to which a contract is awarded shall fail or neglect to enter into the contract and to furnish satisfactory security within ten (10) calendar days after such award or within such further time as the Chairman may allow, the Department shall be entitled to recover from such Bidder its actual damages, including but not limited to the difference between the bid and the next lowest responsive bid, as well as personnel and administrative costs, consulting and legal fees and other expenses incurred in arranging a contract with the next low responsible and responsive Bidder or calling for new bids. The Department may apply all or part of the amount of the bid security to reduce its damages. If upon determination by the Department that the bid security exceeds the amount of its damages, it shall release or return the excess to the person who provided same.

3. Chairman's Options. Upon a withdrawal of the lowest responsive bid, or upon a refusal or failure of the lowest Bidder to execute the contract, the Chairman may thereupon award the contract to the next lowest responsible and responsive Bidder or may call for new bids, whichever method the Chairman may deem to be in the best interests of the Department.

IFB Checklist for Bidders
IFB-16- HHL-014
Scattered Lot Improvements for Five (5) Keaukaha Lots in Tract 1
Waiakea, South Hilo, County of Hawaii, Hawaii

Items required prior to Bid Opening:

☐ Notice of Intention to Bid, no later than 2:00 p.m., MAY 13, 2016.

☐ SPO Form 21 (Standard Qualification Questionnaire), submitted to DHHL, Land Development Division by 4:00 p.m., MAY 13, 2016.

☐ SPO-38 (Hawaii Product Preference Request, if any), by 4:00 p.m., MAY 6, 2016.

Items required with Sealed Bid:

☐ Bid Package Envelope Cover (with the words "Sealed Bid"), included with this IFB.

The Envelope Cover Form shall be used for Sealed Bid Envelopes. The cover form should be glued or taped to the front of the bid envelope and the information type- written or printed clearly in ink.

☐ Bid Offer Form (included with this IFB)

The total sum bid amount must be typed or clearly written in both numbers and words in the appropriate space on page **3** of the Bid Offer Form. Illegible writing on any portion of the Bid Offer Form, except for the signee's signature, may be grounds for considering a Bid "non-responsive".

☐ Corporate Resolution (Indicating who is authorized to sign bid documents and contracts)

☐ Bid Security

☐ Form 1 – Certification of Bidder's Participation in Approved Apprenticeship Program Under Act 17 (Apprenticeship Agreement Preference, if any).

STATE OF HAWAII
DEPARTMENT OF HAWAIIAN HOME LANDS

BID OFFER FORM FOR

SCATTERED LOT IMPROVEMENTS FOR FIVE (5)
KEAUKAHA LOTS IN TRACK 1
WAIAKEA, SOUTH HILO, HAWAII

Lot 58-B-1 & Lot 58-B-2
Lot 59-B-1 & Lot 59-B-2
Lot 63-A 63-B
Lot 131-A-1, 131-A-2 & 131-A-3
Lot 279-A & 279-B
(The 5 initial lots are being subdivided into 11 separate lots)

IFB No.: IFB-16-HHL-014

Chairman
Hawaiian Homes Commission
Department of Hawaiian Home Lands
91-5420 Kapolei Parkway
Kapolei, Hawaii 96707

The undersigned has carefully examined, read, and understands the terms and conditions in the Plans and Specifications, Special Conditions attached hereto, DHHL Construction General Conditions, and General Conditions specified in the Invitation for Bids (IFB) No. IFB-16-HHL-014. The State of Hawaii's (State) Contract for Goods and Services Based on Competitive Sealed Bids AG-003 Rev. 6/22/2009, AG-008 103D General Conditions, are included by reference and made part hereof and available upon written request to the Procurement Officer. The undersigned herby submits the following offer to perform the work as specified herein, all in accordance with the true intent and meaning thereof.

The undersigned understands and agrees that:

1. The State reserves the right to reject any and all offers and to waive any items that are defective when, in the State's opinion, such rejection or waiver will be in the best interest of the State. A solicitation may be rejected in whole or part when in the best interest of the State.

2. If awarded the contract, all services will be in accordance with Hawaii Revised Statutes (HRS) § 103-55.5.

3. In submitting this offer, the Offeror is not in violation of HRS Chapter 84, concerning prohibited State contracts.

4. By submitting this offer, the Offeror certifies that the offer was independently arrived at without collusion and the Offeror did not participate in any practices to restrict competition.

5. It is understood that the failure to receive any addendum shall not relieve the Offeror from any obligation under this IFB.

Date:_____

The undersigned represents that it is: **(Check □ one only)**

□ A **Hawaii business** incorporated or organized under the laws of the State of Hawaii; **OR**

□ A **Compliant Non-Hawaii business** not incorporated or organized under the laws of the State of Hawaii, is or shall be registered at the State of Hawaii Department of Commerce and Consumer Affairs Business Registration Division (DCCA-BREG) to do business in the State of Hawaii.

State of incorporation: _____

Offeror is:

□ Sole Proprietor □ Partnership □ Corporation □ Joint Venture □ Other: _____

Federal ID No.:_____

Hawaii General Excise Tax ID No.:_____

Telephone No.:_____

Fax No.:_____

E-Mail Address:_____

Payment address (other than street address below)

_____

(Street Address, City, State, Zip Code)

Business address

_____

(Street Address, City, State, Zip Code)

Respectfully submitted:

_____

Authorized (Original) Signature

_____

____

Name and Title (Please Type or Print)

*_____

Exact Legal Name of Company (Offeror)

*If Offeror shown above is a "dba" or a "division" of a corporation, furnish the exact legal name of the corporation under which the awarded contract will be executed:

_____

The following bid is hereby submitted for the SCATTERED LOT IMPROVEMENTS FOR FIVE (5) KEAUKAHA LOTS IN TRACT 1 to the Department of Hawaiian Home Lands.

ITEMS	DESCRIPTION	AMOUNT	TOTALS
Item #1 Lot 58-B			
A.	Lot 58-B-1	$_____	
B.	Lot 58-B-2	$_____	
	Sub-total (Item #1: A + B)		$_____
Item #2: Lot 59-B			
A.	Lot 59-B-1	$_____	
B.	Lot 59-B-2	$_____	
	Sub-total (Item #2: A + B)		$_____
Item #3: Lot 63-A			
A.	Lot 63-A	$_____	
B.	Lot 63-B	$_____	
	Sub-total (Item #3: A + B)		$_____
Item #4: Lot 131-A			
A.	Lot 131-A-1	$_____	
B.	Lot 131-A-2	$_____	
C.	Lot 131-A-3	$_____	
	Sub-total (Item #4: A+B+C)		$_____
Item #5: Lot 279			
A.	Lot 279-A	$_____	
B.	Lot 279-B	$_____	
	Sub-total (Item#5: A+B)		$_____
Item #6: All Lots	Monthly Maintenance		
	$_____ @ 12 months		$_____
Item #7:	Allowance (See SC – 6)		$ 300,000.00
	Grand Total (Items #1 thru #7)		$_____

Aggregate Fill Material (2 ½" Selected Borrow #42040) Cost per Ton $_____. Cost to be deducted from allowance if needed.

Note: The Allowance is to be used within the authorized areas on an "As Needed" basis and other related work, with the authorization of the DHHL Project Manager.

TOTAL SUM BID = _____

_____Dollars ($_____).

The prices herein for the above items shall include all materials, labor, tools, equipment, machinery and all incidentals necessary, inclusive of general excise tax to install or to construct these items in place complete and in accordance with the plans and specifications contained in this IFB.

HAWAII PRODUCTS PREFERENCE

In accordance with HRS §103D-1002, the Hawaii products preference is applicable to this solicitation. Hawaii Products [are / may be] available for those items noted on the offer form. The Hawaii products list is available on the SPO webpage at http://hawaii.gov/spo, under Toolbox/QuickLinks click on Goods, Services and Construction, then click on Goods, Services and Construction for Vendors, Contractors and Service Providers, under Preferences, click on Preferences pursuant to HRS 103D Part X including Hawaii Products, then click on Preference for Hawaii Products, and select *Hawaii Products List* to view.

Offeror submitting a Hawaii Product (HP) shall identify the HP on the solicitation offer page(s). Any person desiring a Hawaii product preference shall have the product(s) certified and qualified if not currently on the Hawaii products list, prior to the deadline for receipt of offer(s) specified in the procurement notice and solicitation. The responsibility for certification and qualification shall rest upon the person requesting the preference.

Persons desiring to qualify their product(s) not currently on the Hawaii product list shall complete form SPO-038, *Certification for Hawaii Product Preference* and submit to the Procurement Officer issuing the solicitation (IFB or RFP), and provide all additional information required by the Procurement Officer. For each product, one form shall be completed and submitted (i.e. 3 products should have 3 separate forms completed). Form SPO-038 is available on the SPO webpage at http://spo.hawaii.gov/all-forms/. The manufacturers and producers must complete and submit SPO-38 to DHHL. The form must be received by DHHL no later than **2:00 p.m., April 29, 2016**. Submittal by facsimile (808 620-9299) is acceptable. If DHHL receives and approves SPO-38s relating to this solicitation DHHL will issue an addendum listing the additional certified and qualified Hawaii products by **4:00 p.m., May 6, 2016.**

Bidders may claim a Hawaii product preference for products that it manufactures or produces with its own workforce and equipment. The SPO-38, *Certification for Hawaii Product Preference*, must be submitted in accordance with the procedures described above in order for Bidder to claim a Hawaii product preference for such Hawaii products Bidder intends to use in this work.

When a solicitation contains both HP and non-HP, then for the purpose of selecting the lowest bid or purchase price only, the price offered for a HP item shall be decreased by subtracting 10% for the class I or 15% for the class II HP items offered, respectively. The lowest total offer, taking the preference into consideration, shall be awarded the contract unless the offer provides for additional award criteria. The contract amount of any contract awarded, however, shall be the amount of the price offered, exclusive of the preferences.

Change in Availability of Hawaii product. In the event of any change that materially alters the offeror's ability to supply Hawaii products, the offeror shall notify the procurement officer in writing no later than five working days from when the offeror knows of the change and the parties shall enter into discussions for the purposes of revising the contract or terminating the contract for convenience.

ACCEPTABLE HAWAII PRODUCTS		HAWAII PRODUCTS TO BE USED Cost FOB Jobsite, Unloaded Including Applicable General Excise and Use Taxes	
Description	Manufacturer	Base Bid	Additive Alternate
		$_____	$_____
		$_____	$_____
		$_____	$_____
		$_____	$_____
		$_____	$_____

It is further understood by the Bidder that if upon being granted Hawaii Products, and being awarded the contract, if the Bidder fails to use such products or meet the requirements of such preference, the Bidder shall be subject to penalties, if applicable.

APPRENTICESHIP AGREEMENT PREFERENCE

Hawaii Revised Statutes §103-55.6 (ACT 17, SLH 2009) provides for a Hawai'i Apprenticeship Preference for public works contracts having an estimated value of $250,000.00 or more. The preference shall be in the form of a 5% bid adjustment applied to the bidder's amount for bidders that are parties to apprenticeship agreements

To be eligible for the preference, the bidder shall:

1. Be a party to an apprenticeship agreement registered with the DLIR at the time the bid is made for each apprenticeable trade the bidder will employ to construct the public works project for which the bid is being made.

    a. The apprenticeship agreement shall be registered and conform to the requirements of HRS Chapter 372.

    b. Subcontractors do not have to be a party to an apprenticeship agreement for the bidder to obtain the preference.

    c. The bidder is not required to have apprentices in its employ at the time the bid is submitted to qualify for the preference.

    d. If a bidder's employee is multi-skilled and able to perform work in more than one trade (for example, a project requires a carpenter and a laborer, and the employee is a carpenter, but is also able to perform the work of a laborer), the bidder need only be a party to the carpenter's apprenticeship agreement and does not need to be a party to the laborer's apprenticeship agreement in order to qualify for the preference. The bidder is not "employing" a laborer, only a carpenter, and so only needs to be a party to the carpenter's apprenticeship agreement.

    e. Qualification for the preference is given on a project-by-project basis and depends upon the specific offer for a specific project. A bidder's employees may vary from project to project and may qualify for the preference on one project but may not qualify on another project. For example, on one project, if the bidder only employs carpenters to perform work in the carpentry and labor trades, then the bidder only needs to be a party to the carpenter's apprenticeship agreement in order to qualify for the preference. However, on another project if the same bidder employs both carpenters and laborers, then the bidder will not qualify for the preference if the bidder is only a party to the carpenter's apprenticeship agreement and not the laborer's apprenticeship agreement.

2. State the trades the bidder will employ to perform the work;

3. For each trade to be employed to perform the work, the bidder shall submit a completed signed original *CERTIFICATION OF BIDDER'S PARTICIPATION IN APPROVED APPRENTICESHIP PROGRAM UNDER ACT 17* (*Certification Form 1)* verifying the

participation in an apprenticeship program registered with the State Department of Labor and Industrial Relations (DLIR);

4. The *Certification Form 1* shall be authorized by an apprenticeship sponsor of the DLIR list of registered apprenticeship programs. The authorization shall be an original signature by an authorized official of the apprenticeship sponsor; and

5. The completed *Certification Form 1* for each trade must be submitted by the bidder with the offer. A facsimile or copy is acceptable to be submitted with the offer; however, the completed **signed original** must be submitted within five (5) working days of the due date of the offer. If the signed original is not received within this timeframe, the preference may be denied. Previous certifications shall not apply.

   Failure to comply with ALL of the conditions noted above, without exception, shall disqualify the Bidder from qualifying for, and thus receiving, benefit of the Hawai'i Apprenticeship Preference.

The *Certification Form 1* and the List of Construction Trades in Registered Apprenticeship Programs is available on the DLIR website at: http://labor.hawaii.gov/wdd/.

Upon receiving *Certification Form 1*, the DHHL will verify with DLIR that the apprenticeship program is on the list of apprenticeship programs registered with the DLIR. If the program(s) are not confirmed by the DLIR, the bidder will not qualify for the preference.

If the bidder is certified to participate in an apprenticeship program for each trade which will be employed by the bidder for the project, a preference will be applied to decrease the bidder's total bid amount by five per cent (5%) for evaluation purposes.

Should the bidder qualify for other preferences (for example, Hawaii Products Preference), all applicable preferences shall be applied to the bid amount.

While preference for Hawai'i Apprenticeship will be taken into consideration to determine the low bidder, the contract awarded shall be the original bid amount, exclusive of any preferences. The preference is only for evaluation purposes.

The bidder hereby certifies that it will employ the following apprenticeable trades to perform the work for this project:

LIST OF APPRENTICEABLE TRADES TO BE EMPLOYED	
TRADE	APPRENTICESHIP PROGRAM SPONSOR

(Add additional sheets if necessary)

ALL JOINT CONTRACTORS OR SUBCONTRACTORS TO BE ENGAGED ON THIS PROJECT

The Bidder certifies that the following is a complete listing of all joint Contractors or Subcontractors covered under Chapter 444, Hawaii Revised Statutes, who will be engaged by the Bidder on this project to perform the nature and scope of work indicated pursuant to Section 103D-302, Hawaii Revised Statutes, and understands that failure to comply with this requirement shall be just cause for rejection of the bid.

The Bidder further understands that only those joint Contractors or Subcontractors listed shall be allowed to perform work on this project and that all other work necessary shall be performed by the Bidder with his own employees. If no joint Contractor or Subcontractor is listed, it shall be construed that all of the work shall be performed by the Bidder with his own employees.

The Bidders must be sure that they possess and that the Subcontractors listed in the bid possess all the necessary licenses needed to perform the work for this project. The bidder shall be solely responsible for assuring that all the specialty licenses required to perform the work are covered in his bid.

The Bidder shall include the license number of the joint Contractors or Subcontractors listed below. Failure to provide the correct names and license numbers as registered with the Contractor's Licensing Board may cause rejection of the bid submitted.

Complete Firm Name of Joint Contractor or Subcontractor	License Number	Hawaii Tax ID Number	Nature and Scope of Work to be Performed

(Add additional sheets if necessary)

METHOD OF AWARD

Bidder is required to bid on the entire project. The low bidder shall be determined by the procedures outlined in items 1) through 4) below:

1) Prior to opening of bids, the State will determine the amount of funds available for the project. This amount will be designated the "control amount". The control amount shall be announced at, and prior to the opening of bids.

2) The Base Bid and Alternate, if any, of each Bidder will be adjusted to reflect the applicable preferences in accordance with Chapter 103D, HRS. The Alternate, if any, will then be added to the Base Bid and compared with the control amount.

3) The low bidder shall be the Bidder having the lowest aggregate amount, within the control amount (after application of the various preferences), for the Base Bid plus the Alternate, if any.

4) If adding the Alternate, if any, would make the aggregate amount exceed the control amount for all Bidders, the low bidder shall be the Bidder having the lowest Base Bid after application of the various preferences.

It is further understood and agreed that:

1) The Chairman reserves the right to reject any and/or all bids and waive any defects when, in his opinion, such rejection or waiver will be in the best interest of the State.

2) After determining the low bidder, an award may be made either on the amount of the Base Bid alone, or including the Alternate (exclusive of preferences), if:

   a. It is in the best interest of the State;

   b. Funds are available at time of the award; and

   c. The combination of the Base Bid plus Alternate does not change the apparent low bidder.

3) In the event the Base Bid for all Bidders exceed the control amount, the Chairman reserves the right to negotiate with the lowest responsible and responsive bidder to award a contract within available funds.

4) In the event the award is made for the Base Bid alone, the Chairman reserves the right to amend the contract at a later date to include the Alternate should funds subsequently become available.

OTHER CONDITIONS

1) The liquidated damages per working day for failure to complete the work on time have been determined and are noted in the Special Conditions of the sample contract.

2) By submitting this bid, the undersigned is declaring that his firm has not been assisted or represented on this matter by an individual who has, in a State capacity, been involved in the subject matter of this contract in the past one (1) year.

3) By submitting this bid, the undersigned is declaring that Bidder's own organization will perform at least 20% of the contractor's work. For the purposes of this section, the Contractor's work is defined as: direct cost labor for contractor's forces; direct cost materials installed by the contractor's direct cost labor force; direct cost equipment, either owned or leased, used by the contractor's direct cost labor force; and field overhead cost to include: field supervision, field office trailer (if any), field office equipment and supplies, etc.

4) Upon the acceptance of the bid by the Chairman, the undersigned must enter into and execute a contract for the same and furnish a Performance and Payment Bond, as required by law. These bonds shall conform to the provisions of Sections 103D-324 and 325, Hawaii Revised Statutes, and any law applicable thereto.

5) The quantities given herewith are approximate only and are subject to increase or decrease.

6) The estimated quantities shown for items for which a UNIT PRICE is asked in this bid are only for the purpose of comparing on a uniform basis bids offered for the work under this contract. No claim shall be filed for anticipated profit or loss because of any difference between the quantities of the various classes of work done or the materials and equipment actually installed and the said estimated quantities. Payment on UNIT PRICE items will be made only for the actual number of units incorporated into the finished project at the contract UNIT PRICE.

7) If the product of the UNIT PRICE BID and the number of units does not equal the total amount stated by the undersigned in the Bid for any item, it will be assumed that the error was made in computing the total amount. For the purpose of determining the lowest Bidder, the stated UNIT PRICE alone will be considered as representing the Bidder's intention and the total amount bid on such items shall be considered to be the amount arrived at by multiplying the UNIT PRICE by the number of units.

8) Certification for Safety and Health Programs for Bids in Excess of $100,000. In accordance with Sections 103D-327 and 396-18, Hawaii Revised Statutes, by submitting this bid, the undersigned certifies that his firm will have a written Safety and Health Plan for this project that will be available and implemented by the Notice to Proceed date of this project. Details of the requirements of this plan may be obtained from the Department of Labor and Industrial Relations, Occupational, Safety and Health Division.

9) Any contract arising out of this offer is subject to the approval of the Department of the Attorney General as to form, and to all further approvals, including the approval of the Governor, required by statute, regulation, rule, order, or other directive.

Receipt of the following addenda issued by the Department is acknowledged by the date(s) of receipt indicated below:

	Date		Date
Addendum No. 1	_____	Addendum No. 2	_____
Addendum No. 3	_____	Addendum No. 4	_____

It is understood that failure to receive any such addendum shall not relieve the Contractor from any obligation under this IFB as submitted.

Bid Security in the amount of:_____

_____ DOLLARS ($_____)

as required by law, is enclosed herewith in the form of:

(____) Surety Bond (*1)
(____) Legal Tender (*2)
(____) Cashier's Check (*3)
(____) Certificate of Deposit (*3)
(____) Certified Check (*3)
(____) Official Check (*3)
(____) Share Certificate (*3)
(____) Teller's Check (*3)
(____) Treasurer's Check (*3)

Respectfully submitted,

_____
Name of Company, Joint Venture or Partnership

_____
License No.

By_____
Signature (*4)

Title:_____

Date:_____

Address:_____

_____

Telephone No.:_____

(IF A CORPORATION, AFFIX CORPORATE SEAL TO SIGNATURE, BE SURE TO FILL IN ATTACHED LIST OF SUBCONTRACTORS. THIS BID FORM MAY NOT BE ALTERED AND BIDDERS MAY NOT QUALIFY OR CONDITION THEIR BIDS IN ANY WAY.)

PLEASE FILL OUT THE ATTACHED CERTIFICATE OF RESOLUTION GIVING EVIDENCE OF THE AUTHORITY OF THIS OFFICER TO SUBMIT BIDS ON BEHALF OF THE COMPANY.

NOTES:

*1. Surety bond underwritten by a company licensed to issue bonds in this State;

*2. Legal tender; or

*3. A certificate of deposit; share certificate; or cashier's, treasurer's, teller's, or official check accepted by, and payable on demand to the State by a bank, a savings institution, or credit union insured by the Federal Deposit Insurance Corporation of the National Credit Union Administration.

A. These instruments may be utilized only to a maximum of $100,000.

B. If the required security or bond amount totals over $100,000, more than one instrument not exceeding $100,000 each and issued by different financial institutions shall be accepted.

*4. Please attach to this page evidence of the authority of this officer to submit bids on behalf of the Company, and also the names and residence addresses of all officers of the Company.

*5. Fill in all blank spaces with information asked for or bid may be invalidated. <u>BID MUST BE INTACT; MISSING PAGES MAY INVALIDATE YOUR BID.</u>

CERTIFICATE OF RESOLUTION

I, _____, Secretary of _____, a Hawaii Corporation, do hereby certify that the following is a full, true and correct copy of a resolution duly adopted by the Board of Directors of said Corporation, at its meeting duly called and held at the office of the Corporation _____, Hawaii, on _____ day of _____, 2016, at which a quorum was present and acting throughout; and that said resolution has not been modified, amended or rescinded and continues in full force and effect.

"RESOLVED that any individual at the time holding the position(s) of _____, be, and each of them hereby is, authorized to execute on behalf of the Corporation any bid, proposal or contract for the sale or rental of the products of the Corporation or for the services to be performed by the Corporation and to execute any bond required by any such bid, proposal or contract with the United States Government or the State of Hawaii or the City and County of Honolulu, or any County of Municipal Government of said State, or any department or subdivision of any of them."

IN WITNESS THEREOF, I have hereunto set my hand and affixed the corporate seal of said

_____ this _____ day of _____, 2016.

_____
Secretary

END OF BID

STATE OF HAWAII

DEPARTMENT OF HAWAIIAN HOME LANDS

SCATTER LOT IMPROVEMENT FOR FIVE (5) KEAUKAHA LOTS IN TRACT 1

WAIAKEA, SOUTH HILO, HAWAII

IFB NO.: IFB-16-HHL-014

SEALED BID

Submitted by: _____

Address: _____

Date: _____

Bid Package Envelope Cover

GENERAL CONDITIONS

Table of Contents

Page(s)

1. Coordination of Services by the STATE 2
2. Relationship of Parties: Independent Contractor Status and Responsibilities, Including Tax Responsibilities 2
3. Personnel Requirements 3
4. Nondiscrimination 3
5. Conflicts of Interest 3
6. Subcontracts and Assignments 3
7. Indemnification and Defense 4
8. Cost of Litigation 4
9. Liquidated Damages 4
10. STATE'S Right of Offset 4
11. Disputes 4
12. Suspension of Contract 4
13. Termination for Default 5
14. Termination for Convenience 6
15. Claims Based on the Agency Procurement Officer's Actions or Omissions 8
16. Costs and Expenses 8
17. Payment Procedures; Final Payment; Tax Clearance 9
18. Federal Funds 9
19. Modifications of Contract 9
20. Change Order 10
21. Price Adjustment 11
22. Variation in Quantity for Definite Quantity Contracts 11
23. Changes in Cost-Reimbursement Contract 11
24. Confidentiality of Material 12
25. Publicity 12
26. Ownership Rights and Copyright 12
27. Liens and Warranties 12
28. Audit of Books and Records of the CONTRACTOR 13
29. Cost or Pricing Data 13
30. Audit of Cost or Pricing Data 13
31. Records Retention 13
32. Antitrust Claims 13
33. Patented Articles. 13
34. Governing Law 14
35. Compliance with Laws 14
36. Conflict between General Conditions and Procurement Rules 14
37. Entire Contract 14
38. Severability 14
39. Waiver 14
40. Pollution Control 14
41. Campaign Contributions 14
42. Confidentiality of Personal Information 14

1. Coordination of Services by the STATE. The head of the purchasing agency ("HOPA") (which term includes the designee of the HOPA) shall coordinate the services to be provided by the CONTRACTOR in order to complete the performance required in the Contract. The CONTRACTOR shall maintain communications with HOPA at all stages of the CONTRACTOR'S work, and submit to HOPA for resolution any questions which may arise as to the performance of this Contract. "Purchasing agency" as used in these General Conditions means and includes any governmental body which is authorized under chapter 103D, HRS, or its implementing rules and procedures, or by way of delegation, to enter into contracts for the procurement of goods or services or both.

2. Relationship of Parties: Independent Contractor Status and Responsibilities, Including Tax Responsibilities.

   a. In the performance of services required under this Contract, the CONTRACTOR is an "independent contractor," with the authority and responsibility to control and direct the performance and details of the work and services required under this Contract; however, the STATE shall have a general right to inspect work in progress to determine whether, in the STATE'S opinion, the services are being performed by the CONTRACTOR in compliance with this Contract. Unless otherwise provided by special condition, it is understood that the STATE does not agree to use the CONTRACTOR exclusively, and that the CONTRACTOR is free to contract to provide services to other individuals or entities while under contract with the STATE.

   b. The CONTRACTOR and the CONTRACTOR'S employees and agents are not by reason of this Contract, agents or employees of the State for any purpose, and the CONTRACTOR and the CONTRACTOR'S employees and agents shall not be entitled to claim or receive from the State any vacation, sick leave, retirement, workers' compensation, unemployment insurance, or other benefits provided to state employees.

   c. The CONTRACTOR shall be responsible for the accuracy, completeness, and adequacy of the CONTRACTOR'S performance under this Contract. Furthermore, the CONTRACTOR intentionally, voluntarily, and knowingly assumes the sole and entire liability to the CONTRACTOR'S employees and agents, and to any individual not a party to this Contract, for all loss, damage, or injury caused by the CONTRACTOR, or the CONTRACTOR'S employees or agents in the course of their employment.

   d. The CONTRACTOR shall be responsible for payment of all applicable federal, state, and county taxes and fees which may become due and owing by the CONTRACTOR by reason of this Contract, including but not limited to (i) income taxes, (ii) employment related fees, assessments, and taxes, and (iii) general excise taxes. The CONTRACTOR also is responsible for obtaining all licenses, permits, and certificates that may be required in order to perform this Contract.

   e. The CONTRACTOR shall obtain a general excise tax license from the Department of Taxation, State of Hawaii, in accordance with section 237-9, HRS, and shall comply with all requirements thereof. The CONTRACTOR shall obtain a tax clearance certificate from the Director of Taxation, State of Hawaii, and the Internal Revenue Service, U.S. Department of the Treasury, showing that all delinquent taxes, if any, levied or accrued under state law and the Internal Revenue Code of 1986, as amended, against the CONTRACTOR have been paid and submit the same to the STATE prior to commencing any performance under this Contract. The CONTRACTOR shall also be solely responsible for meeting all requirements necessary to obtain the tax clearance certificate required for final payment under sections 103-53 and 103D-328, HRS, and paragraph 17 of these General Conditions.

   f. The CONTRACTOR is responsible for securing all employee-related insurance coverage for the CONTRACTOR and the CONTRACTOR'S employees and agents that is or may be required by law, and for payment of all premiums, costs, and other liabilities associated with securing the insurance coverage.

g. The CONTRACTOR shall obtain a certificate of compliance issued by the Department of Labor and Industrial Relations, State of Hawaii, in accordance with section103D-310, HRS, and section 3-122-112, HAR, that is current within six months of the date of issuance.

h. The CONTRACTOR shall obtain a certificate of good standing issued by the Department of Commerce and Consumer Affairs, State of Hawaii, in accordance with section 103D-310, HRS, and section 3-122-112, HAR, that is current within six months of the date of issuance.

i. In lieu of the above certificates from the Department of Taxation, Labor and Industrial Relations, and Commerce and Consumer Affairs, the CONTRACTOR may submit proof of compliance through the State Procurement Office's designated certification process.

3. Personnel Requirements.

a. The CONTRACTOR shall secure, at the CONTRACTOR'S own expense, all personnel required to perform this Contract.

b. The CONTRACTOR shall ensure that the CONTRACTOR'S employees or agents are experienced and fully qualified to engage in the activities and perform the services required under this Contract, and that all applicable licensing and operating requirements imposed or required under federal, state, or county law, and all applicable accreditation and other standards of quality generally accepted in the field of the activities of such employees and agents are complied with and satisfied.

4. Nondiscrimination. No person performing work under this Contract, including any subcontractor, employee, or agent of the CONTRACTOR, shall engage in any discrimination that is prohibited by any applicable federal, state, or county law.

5. Conflicts of Interest. The CONTRACTOR represents that neither the CONTRACTOR, nor any employee or agent of the CONTRACTOR, presently has any interest, and promises that no such interest, direct or indirect, shall be acquired, that would or might conflict in any manner or degree with the CONTRACTOR'S performance under this Contract.

6. Subcontracts and Assignments. The CONTRACTOR shall not assign or subcontract any of the CONTRACTOR'S duties, obligations, or interests under this Contract and no such assignment or subcontract shall be effective unless (i) the CONTRACTOR obtains the prior written consent of the STATE, and (ii) the CONTRACTOR'S assignee or subcontractor submits to the STATE a tax clearance certificate from the Director of Taxation, State of Hawaii, and the Internal Revenue Service, U.S. Department of Treasury, showing that all delinquent taxes, if any, levied or accrued under state law and the Internal Revenue Code of 1986, as amended, against the CONTRACTOR'S assignee or subcontractor have been paid. Additionally, no assignment by the CONTRACTOR of the CONTRACTOR'S right to compensation under this Contract shall be effective unless and until the assignment is approved by the Comptroller of the State of Hawaii, as provided in section 40-58, HRS.

a. Recognition of a successor in interest. When in the best interest of the State, a successor in interest may be recognized in an assignment contract in which the STATE, the CONTRACTOR and the assignee or transferee (hereinafter referred to as the "Assignee") agree that:

(1) The Assignee assumes all of the CONTRACTOR'S obligations;

(2) The CONTRACTOR remains liable for all obligations under this Contract but waives all rights under this Contract as against the STATE; and

(3) The CONTRACTOR shall continue to furnish, and the Assignee shall also furnish, all required bonds.

b. Change of name. When the CONTRACTOR asks to change the name in which it holds this Contract with the STATE, the procurement officer of the purchasing agency (hereinafter referred to as the "Agency procurement officer") shall, upon receipt of a document acceptable or satisfactory to the

Agency procurement officer indicating such change of name (for example, an amendment to the CONTRACTOR'S articles of incorporation), enter into an amendment to this Contract with the CONTRACTOR to effect such a change of name. The amendment to this Contract changing the CONTRACTOR'S name shall specifically indicate that no other terms and conditions of this Contract are thereby changed.

c. Reports. All assignment contracts and amendments to this Contract effecting changes of the CONTRACTOR'S name or novations hereunder shall be reported to the chief procurement officer (CPO) as defined in section 103D-203(a), HRS, within thirty days of the date that the assignment contract or amendment becomes effective.

d. Actions affecting more than one purchasing agency. Notwithstanding the provisions of subparagraphs 6a through 6c herein, when the CONTRACTOR holds contracts with more than one purchasing agency of the State, the assignment contracts and the novation and change of name amendments herein authorized shall be processed only through the CPO's office.

7. Indemnification and Defense. The CONTRACTOR shall defend, indemnify, and hold harmless the State of Hawaii, the contracting agency, and their officers, employees, and agents from and against all liability, loss, damage, cost, and expense, including all attorneys' fees, and all claims, suits, and demands therefore, arising out of or resulting from the acts or omissions of the CONTRACTOR or the CONTRACTOR'S employees, officers, agents, or subcontractors under this Contract. The provisions of this paragraph shall remain in full force and effect notwithstanding the expiration or early termination of this Contract.

8. Cost of Litigation. In case the STATE shall, without any fault on its part, be made a party to any litigation commenced by or against the CONTRACTOR in connection with this Contract, the CONTRACTOR shall pay all costs and expenses incurred by or imposed on the STATE, including attorneys' fees.

9. Liquidated Damages. When the CONTRACTOR is given notice of delay or nonperformance as specified in paragraph 13 (Termination for Default) and fails to cure in the time specified, it is agreed the CONTRACTOR shall pay to the STATE the amount, if any, set forth in this Contract per calendar day from the date set for cure until either (i) the STATE reasonably obtains similar goods or services, or both, if the CONTRACTOR is terminated for default, or (ii) until the CONTRACTOR provides the goods or services, or both, if the CONTRACTOR is not terminated for default. To the extent that the CONTRACTOR'S delay or nonperformance is excused under paragraph 13d (Excuse for Nonperformance or Delay Performance), liquidated damages shall not be assessable against the CONTRACTOR. The CONTRACTOR remains liable for damages caused other than by delay.

10. STATE'S Right of Offset. The STATE may offset against any monies or other obligations the STATE owes to the CONTRACTOR under this Contract, any amounts owed to the State of Hawaii by the CONTRACTOR under this Contract or any other contracts, or pursuant to any law or other obligation owed to the State of Hawaii by the CONTRACTOR, including, without limitation, the payment of any taxes or levies of any kind or nature. The STATE will notify the CONTRACTOR in writing of any offset and the nature of such offset. For purposes of this paragraph, amounts owed to the State of Hawaii shall not include debts or obligations which have been liquidated, agreed to by the CONTRACTOR, and are covered by an installment payment or other settlement plan approved by the State of Hawaii, provided, however, that the CONTRACTOR shall be entitled to such exclusion only to the extent that the CONTRACTOR is current with, and not delinquent on, any payments or obligations owed to the State of Hawaii under such payment or other settlement plan.

11. Disputes. Disputes shall be resolved in accordance with section 103D-703, HRS, and chapter 3-126, Hawaii Administrative Rules ("HAR"), as the same may be amended from time to time.

12. Suspension of Contract. The STATE reserves the right at any time and for any reason to suspend this Contract for any reasonable period, upon written notice to the CONTRACTOR in accordance with the provisions herein.

a. Order to stop performance. The Agency procurement officer may, by written order to the CONTRACTOR, at any time, and without notice to any surety, require the CONTRACTOR to stop all or any part of the performance called for by this Contract. This order shall be for a specified

period not exceeding sixty (60) days after the order is delivered to the CONTRACTOR, unless the parties agree to any further period. Any such order shall be identified specifically as a stop performance order issued pursuant to this section. Stop performance orders shall include, as appropriate: (1) A clear description of the work to be suspended; (2) Instructions as to the issuance of further orders by the CONTRACTOR for material or services; (3) Guidance as to action to be taken on subcontracts; and (4) Other instructions and suggestions to the CONTRACTOR for minimizing costs. Upon receipt of such an order, the CONTRACTOR shall forthwith comply with its terms and suspend all performance under this Contract at the time stated, provided, however, the CONTRACTOR shall take all reasonable steps to minimize the occurrence of costs allocable to the performance covered by the order during the period of performance stoppage. Before the stop performance order expires, or within any further period to which the parties shall have agreed, the Agency procurement officer shall either:

(1) Cancel the stop performance order; or

(2) Terminate the performance covered by such order as provided in the termination for default provision or the termination for convenience provision of this Contract.

b. Cancellation or expiration of the order. If a stop performance order issued under this section is cancelled at any time during the period specified in the order, or if the period of the order or any extension thereof expires, the CONTRACTOR shall have the right to resume performance. An appropriate adjustment shall be made in the delivery schedule or contract price, or both, and the Contract shall be modified in writing accordingly, if:

(1) The stop performance order results in an increase in the time required for, or in the CONTRACTOR'S cost properly allocable to, the performance of any part of this Contract; and

(2) The CONTRACTOR asserts a claim for such an adjustment within thirty (30) days after the end of the period of performance stoppage; provided that, if the Agency procurement officer decides that the facts justify such action, any such claim asserted may be received and acted upon at any time prior to final payment under this Contract.

c. Termination of stopped performance. If a stop performance order is not cancelled and the performance covered by such order is terminated for default or convenience, the reasonable costs resulting from the stop performance order shall be allowable by adjustment or otherwise.

d. Adjustment of price. Any adjustment in contract price made pursuant to this paragraph shall be determined in accordance with the price adjustment provision of this Contract.

13. Termination for Default.

a. Default. If the CONTRACTOR refuses or fails to perform any of the provisions of this Contract with such diligence as will ensure its completion within the time specified in this Contract, or any extension thereof, otherwise fails to timely satisfy the Contract provisions, or commits any other substantial breach of this Contract, the Agency procurement officer may notify the CONTRACTOR in writing of the delay or non-performance and if not cured in ten (10) days or any longer time specified in writing by the Agency procurement officer, such officer may terminate the CONTRACTOR'S right to proceed with the Contract or such part of the Contract as to which there has been delay or a failure to properly perform. In the event of termination in whole or in part, the Agency procurement officer may procure similar goods or services in a manner and upon the terms deemed appropriate by the Agency procurement officer. The CONTRACTOR shall continue performance of the Contract to the extent it is not terminated and shall be liable for excess costs incurred in procuring similar goods or services.

b. CONTRACTOR'S duties. Notwithstanding termination of the Contract and subject to any directions from the Agency procurement officer, the CONTRACTOR shall take timely, reasonable, and

necessary action to protect and preserve property in the possession of the CONTRACTOR in which the STATE has an interest.

c. Compensation. Payment for completed goods and services delivered and accepted by the STATE shall be at the price set forth in the Contract. Payment for the protection and preservation of property shall be in an amount agreed upon by the CONTRACTOR and the Agency procurement officer. If the parties fail to agree, the Agency procurement officer shall set an amount subject to the CONTRACTOR'S rights under chapter 3-126, HAR. The STATE may withhold from amounts due the CONTRACTOR such sums as the Agency procurement officer deems to be necessary to protect the STATE against loss because of outstanding liens or claims and to reimburse the STATE for the excess costs expected to be incurred by the STATE in procuring similar goods and services.

d. Excuse for nonperformance or delayed performance. The CONTRACTOR shall not be in default by reason of any failure in performance of this Contract in accordance with its terms, including any failure by the CONTRACTOR to make progress in the prosecution of the performance hereunder which endangers such performance, if the CONTRACTOR has notified the Agency procurement officer within fifteen (15) days after the cause of the delay and the failure arises out of causes such as: acts of God; acts of a public enemy; acts of the State and any other governmental body in its sovereign or contractual capacity; fires; floods; epidemics; quarantine restrictions; strikes or other labor disputes; freight embargoes; or unusually severe weather. If the failure to perform is caused by the failure of a subcontractor to perform or to make progress, and if such failure arises out of causes similar to those set forth above, the CONTRACTOR shall not be deemed to be in default, unless the goods and services to be furnished by the subcontractor were reasonably obtainable from other sources in sufficient time to permit the CONTRACTOR to meet the requirements of the Contract. Upon request of the CONTRACTOR, the Agency procurement officer shall ascertain the facts and extent of such failure, and, if such officer determines that any failure to perform was occasioned by any one or more of the excusable causes, and that, but for the excusable cause, the CONTRACTOR'S progress and performance would have met the terms of the Contract, the delivery schedule shall be revised accordingly, subject to the rights of the STATE under this Contract. As used in this paragraph, the term "subcontractor" means subcontractor at any tier.

e. Erroneous termination for default. If, after notice of termination of the CONTRACTOR'S right to proceed under this paragraph, it is determined for any reason that the CONTRACTOR was not in default under this paragraph, or that the delay was excusable under the provisions of subparagraph 13d, "Excuse for nonperformance or delayed performance," the rights and obligations of the parties shall be the same as if the notice of termination had been issued pursuant to paragraph 14.

f. Additional rights and remedies. The rights and remedies provided in this paragraph are in addition to any other rights and remedies provided by law or under this Contract.

14. Termination for Convenience.

a. Termination. The Agency procurement officer may, when the interests of the STATE so require, terminate this Contract in whole or in part, for the convenience of the STATE. The Agency procurement officer shall give written notice of the termination to the CONTRACTOR specifying the part of the Contract terminated and when termination becomes effective.

b. CONTRACTOR'S obligations. The CONTRACTOR shall incur no further obligations in connection with the terminated performance and on the date(s) set in the notice of termination the CONTRACTOR will stop performance to the extent specified. The CONTRACTOR shall also terminate outstanding orders and subcontracts as they relate to the terminated performance. The CONTRACTOR shall settle the liabilities and claims arising out of the termination of subcontracts and orders connected with the terminated performance subject to the STATE'S approval. The Agency procurement officer may direct the CONTRACTOR to assign the CONTRACTOR'S right, title, and interest under terminated orders or subcontracts to the STATE. The CONTRACTOR must still complete the performance not terminated by the notice of termination and may incur obligations as necessary to do so.

c. Right to goods and work product. The Agency procurement officer may require the CONTRACTOR to transfer title and deliver to the STATE in the manner and to the extent directed by the Agency procurement officer:

(1) Any completed goods or work product; and

(2) The partially completed goods and materials, parts, tools, dies, jigs, fixtures, plans, drawings, information, and contract rights (hereinafter called "manufacturing material") as the CONTRACTOR has specifically produced or specially acquired for the performance of the terminated part of this Contract.

The CONTRACTOR shall, upon direction of the Agency procurement officer, protect and preserve property in the possession of the CONTRACTOR in which the STATE has an interest. If the Agency procurement officer does not exercise this right, the CONTRACTOR shall use best efforts to sell such goods and manufacturing materials. Use of this paragraph in no way implies that the STATE has breached the Contract by exercise of the termination for convenience provision.

d. Compensation.

(1) The CONTRACTOR shall submit a termination claim specifying the amounts due because of the termination for convenience together with the cost or pricing data, submitted to the extent required by chapter 3-122, HAR, bearing on such claim. If the CONTRACTOR fails to file a termination claim within one year from the effective date of termination, the Agency procurement officer may pay the CONTRACTOR, if at all, an amount set in accordance with subparagraph 14d(3) below.

(2) The Agency procurement officer and the CONTRACTOR may agree to a settlement provided the CONTRACTOR has filed a termination claim supported by cost or pricing data submitted as required and that the settlement does not exceed the total Contract price plus settlement costs reduced by payments previously made by the STATE, the proceeds of any sales of goods and manufacturing materials under subparagraph 14c, and the Contract price of the performance not terminated.

(3) Absent complete agreement under subparagraph 14d(2) the Agency procurement officer shall pay the CONTRACTOR the following amounts, provided payments agreed to under subparagraph 14d(2) shall not duplicate payments under this subparagraph for the following:

(A) Contract prices for goods or services accepted under the Contract;

(B) Costs incurred in preparing to perform and performing the terminated portion of the performance plus a fair and reasonable profit on such portion of the performance, such profit shall not include anticipatory profit or consequential damages, less amounts paid or to be paid for accepted goods or services; provided, however, that if it appears that the CONTRACTOR would have sustained a loss if the entire Contract would have been completed, no profit shall be allowed or included and the amount of compensation shall be reduced to reflect the anticipated rate of loss;

(C) Costs of settling and paying claims arising out of the termination of subcontracts or orders pursuant to subparagraph 14b. These costs must not include costs paid in accordance with subparagraph 14d(3)(B);

(D) The reasonable settlement costs of the CONTRACTOR, including accounting, legal, clerical, and other expenses reasonably necessary for the preparation of settlement claims and supporting data with respect to the terminated portion of the Contract and for the termination of subcontracts thereunder, together with reasonable storage, transportation, and other costs incurred in connection with the protection or disposition of property allocable to the terminated portion of this Contract. The total sum to be paid the CONTRACTOR under this subparagraph shall not exceed the

total Contract price plus the reasonable settlement costs of the CONTRACTOR reduced by the amount of payments otherwise made, the proceeds of any sales of supplies and manufacturing materials under subparagraph 14d(2), and the contract price of performance not terminated.

(4) Costs claimed, agreed to, or established under subparagraphs 14d(2) and 14d(3) shall be in accordance with Chapter 3-123 (Cost Principles) of the Procurement Rules.

15. Claims Based on the Agency Procurement Officer's Actions or Omissions.

a. Changes in scope. If any action or omission on the part of the Agency procurement officer (which term includes the designee of such officer for purposes of this paragraph 15) requiring performance changes within the scope of the Contract constitutes the basis for a claim by the CONTRACTOR for additional compensation, damages, or an extension of time for completion, the CONTRACTOR shall continue with performance of the Contract in compliance with the directions or orders of such officials, but by so doing, the CONTRACTOR shall not be deemed to have prejudiced any claim for additional compensation, damages, or an extension of time for completion; provided:

(1) Written notice required. The CONTRACTOR shall give written notice to the Agency procurement officer:

(A) Prior to the commencement of the performance involved, if at that time the CONTRACTOR knows of the occurrence of such action or omission;

(B) Within thirty (30) days after the CONTRACTOR knows of the occurrence of such action or omission, if the CONTRACTOR did not have such knowledge prior to the commencement of the performance; or

(C) Within such further time as may be allowed by the Agency procurement officer in writing.

(2) Notice content. This notice shall state that the CONTRACTOR regards the act or omission as a reason which may entitle the CONTRACTOR to additional compensation, damages, or an extension of time. The Agency procurement officer, upon receipt of such notice, may rescind such action, remedy such omission, or take such other steps as may be deemed advisable in the discretion of the Agency procurement officer;

(3) Basis must be explained. The notice required by subparagraph 15a(1) describes as clearly as practicable at the time the reasons why the CONTRACTOR believes that additional compensation, damages, or an extension of time may be remedies to which the CONTRACTOR is entitled; and

(4) Claim must be justified. The CONTRACTOR must maintain and, upon request, make available to the Agency procurement officer within a reasonable time, detailed records to the extent practicable, and other documentation and evidence satisfactory to the STATE, justifying the claimed additional costs or an extension of time in connection with such changes.

b. CONTRACTOR not excused. Nothing herein contained, however, shall excuse the CONTRACTOR from compliance with any rules or laws precluding any state officers and CONTRACTOR from acting in collusion or bad faith in issuing or performing change orders which are clearly not within the scope of the Contract.

c. Price adjustment. Any adjustment in the price made pursuant to this paragraph shall be determined in accordance with the price adjustment provision of this Contract.

16. Costs and Expenses. Any reimbursement due the CONTRACTOR for per diem and transportation expenses under this Contract shall be subject to chapter 3-123 (Cost Principles), HAR, and the following guidelines:

a. Reimbursement for air transportation shall be for actual cost or coach class air fare, whichever is less.

b. Reimbursement for ground transportation costs shall not exceed the actual cost of renting an intermediate-sized vehicle.

c. Unless prior written approval of the HOPA is obtained, reimbursement for subsistence allowance (i.e., hotel and meals, etc.) shall not exceed the applicable daily authorized rates for inter-island or out-of-state travel that are set forth in the current Governor's Executive Order authorizing adjustments in salaries and benefits for state officers and employees in the executive branch who are excluded from collective bargaining coverage.

17. Payment Procedures; Final Payment; Tax Clearance.

a. Original invoices required. All payments under this Contract shall be made only upon submission by the CONTRACTOR of original invoices specifying the amount due and certifying that services requested under the Contract have been performed by the CONTRACTOR according to the Contract.

b. Subject to available funds. Such payments are subject to availability of funds and allotment by the Director of Finance in accordance with chapter 37, HRS. Further, all payments shall be made in accordance with and subject to chapter 40, HRS.

c. Prompt payment.

(1) Any money, other than retainage, paid to the CONTRACTOR shall be disbursed to subcontractors within ten (10) days after receipt of the money in accordance with the terms of the subcontract; provided that the subcontractor has met all the terms and conditions of the subcontract and there are no bona fide disputes; and

(2) Upon final payment to the CONTRACTOR, full payment to the subcontractor, including retainage, shall be made within ten (10) days after receipt of the money; provided that there are no bona fide disputes over the subcontractor's performance under the subcontract.

d. Final payment. Final payment under this Contract shall be subject to sections 103-53 and 103D-328, HRS, which require a tax clearance from the Director of Taxation, State of Hawaii, and the Internal Revenue Service, U.S. Department of Treasury, showing that all delinquent taxes, if any, levied or accrued under state law and the Internal Revenue Code of 1986, as amended, against the CONTRACTOR have been paid. Further, in accordance with section 3-122-112, HAR, CONTRACTOR shall provide a certificate affirming that the CONTRACTOR has remained in compliance with all applicable laws as required by this section.

18. Federal Funds. If this Contract is payable in whole or in part from federal funds, CONTRACTOR agrees that, as to the portion of the compensation under this Contract to be payable from federal funds, the CONTRACTOR shall be paid only from such funds received from the federal government, and shall not be paid from any other funds. Failure of the STATE to receive anticipated federal funds shall not be considered a breach by the STATE or an excuse for nonperformance by the CONTRACTOR.

19. Modifications of Contract.

a. In writing. Any modification, alteration, amendment, change, or extension of any term, provision, or condition of this Contract permitted by this Contract shall be made by written amendment to this Contract, signed by the CONTRACTOR and the STATE, provided that change orders shall be made in accordance with paragraph 20 herein.

b. No oral modification. No oral modification, alteration, amendment, change, or extension of any term, provision, or condition of this Contract shall be permitted.

c. Agency procurement officer. By written order, at any time, and without notice to any surety, the Agency procurement officer may unilaterally order of the CONTRACTOR:

(A) Changes in the work within the scope of the Contract; and

(B) Changes in the time of performance of the Contract that do not alter the scope of the Contract work.

d. Adjustments of price or time for performance. If any modification increases or decreases the CONTRACTOR'S cost of, or the time required for, performance of any part of the work under this Contract, an adjustment shall be made and this Contract modified in writing accordingly. Any adjustment in contract price made pursuant to this clause shall be determined, where applicable, in accordance with the price adjustment clause of this Contract or as negotiated.

e. Claim barred after final payment. No claim by the CONTRACTOR for an adjustment hereunder shall be allowed if written modification of the Contract is not made prior to final payment under this Contract.

f. Claims not barred. In the absence of a written contract modification, nothing in this clause shall be deemed to restrict the CONTRACTOR'S right to pursue a claim under this Contract or for a breach of contract.

g. Head of the purchasing agency approval. If this is a professional services contract awarded pursuant to section 103D-303 or 103D-304, HRS, any modification, alteration, amendment, change, or extension of any term, provision, or condition of this Contract which increases the amount payable to the CONTRACTOR by at least $25,000.00 and ten per cent (10%) or more of the initial contract price, must receive the prior approval of the head of the purchasing agency.

h. Tax clearance. The STATE may, at its discretion, require the CONTRACTOR to submit to the STATE, prior to the STATE'S approval of any modification, alteration, amendment, change, or extension of any term, provision, or condition of this Contract, a tax clearance from the Director of Taxation, State of Hawaii, and the Internal Revenue Service, U.S. Department of Treasury, showing that all delinquent taxes, if any, levied or accrued under state law and the Internal Revenue Code of 1986, as amended, against the CONTRACTOR have been paid.

i. Sole source contracts. Amendments to sole source contracts that would change the original scope of the Contract may only be made with the approval of the CPO. Annual renewal of a sole source contract for services should not be submitted as an amendment.

20. Change Order. The Agency procurement officer may, by a written order signed only by the STATE, at any time, and without notice to any surety, and subject to all appropriate adjustments, make changes within the general scope of this Contract in any one or more of the following:

(1) Drawings, designs, or specifications, if the goods or services to be furnished are to be specially provided to the STATE in accordance therewith;

(2) Method of delivery; or

(3) Place of delivery.

a. Adjustments of price or time for performance. If any change order increases or decreases the CONTRACTOR'S cost of, or the time required for, performance of any part of the work under this Contract, whether or not changed by the order, an adjustment shall be made and the Contract modified in writing accordingly. Any adjustment in the Contract price made pursuant to this provision shall be determined in accordance with the price adjustment provision of this Contract. Failure of the parties to agree to an adjustment shall not excuse the CONTRACTOR from proceeding with the Contract as changed, provided that the Agency procurement officer promptly and duly makes the provisional adjustments in payment or time for performance as may be reasonable. By

proceeding with the work, the CONTRACTOR shall not be deemed to have prejudiced any claim for additional compensation, or any extension of time for completion.

b. Time period for claim. Within ten (10) days after receipt of a written change order under subparagraph 20a, unless the period is extended by the Agency procurement officer in writing, the CONTRACTOR shall respond with a claim for an adjustment. The requirement for a timely written response by CONTRACTOR cannot be waived and shall be a condition precedent to the assertion of a claim.

c. Claim barred after final payment. No claim by the CONTRACTOR for an adjustment hereunder shall be allowed if a written response is not given prior to final payment under this Contract.

d. Other claims not barred. In the absence of a change order, nothing in this paragraph 20 shall be deemed to restrict the CONTRACTOR'S right to pursue a claim under the Contract or for breach of contract.

21. Price Adjustment.

a. Price adjustment. Any adjustment in the contract price pursuant to a provision in this Contract shall be made in one or more of the following ways:

(1) By agreement on a fixed price adjustment before commencement of the pertinent performance or as soon thereafter as practicable;

(2) By unit prices specified in the Contract or subsequently agreed upon;

(3) By the costs attributable to the event or situation covered by the provision, plus appropriate profit or fee, all as specified in the Contract or subsequently agreed upon;

(4) In such other manner as the parties may mutually agree; or

(5) In the absence of agreement between the parties, by a unilateral determination by the Agency procurement officer of the costs attributable to the event or situation covered by the provision, plus appropriate profit or fee, all as computed by the Agency procurement officer in accordance with generally accepted accounting principles and applicable sections of chapters 3-123 and 3-126, HAR.

b. Submission of cost or pricing data. The CONTRACTOR shall provide cost or pricing data for any price adjustments subject to the provisions of chapter 3-122, HAR.

22. Variation in Quantity for Definite Quantity Contracts. Upon the agreement of the STATE and the CONTRACTOR, the quantity of goods or services, or both, if a definite quantity is specified in this Contract, may be increased by a maximum of ten per cent (10%); provided the unit prices will remain the same except for any price adjustments otherwise applicable; and the Agency procurement officer makes a written determination that such an increase will either be more economical than awarding another contract or that it would not be practical to award another contract.

23. Changes in Cost-Reimbursement Contract. If this Contract is a cost-reimbursement contract, the following provisions shall apply:

a. The Agency procurement officer may at any time by written order, and without notice to the sureties, if any, make changes within the general scope of the Contract in any one or more of the following:

(1) Description of performance (Attachment 1);

(2) Time of performance (i.e., hours of the day, days of the week, etc.);

(3) Place of performance of services;

(4) Drawings, designs, or specifications when the supplies to be furnished are to be specially manufactured for the STATE in accordance with the drawings, designs, or specifications;

(5) Method of shipment or packing of supplies; or

(6) Place of delivery.

b. If any change causes an increase or decrease in the estimated cost of, or the time required for performance of, any part of the performance under this Contract, whether or not changed by the order, or otherwise affects any other terms and conditions of this Contract, the Agency procurement officer shall make an equitable adjustment in the (1) estimated cost, delivery or completion schedule, or both; (2) amount of any fixed fee; and (3) other affected terms and shall modify the Contract accordingly.

c. The CONTRACTOR must assert the CONTRACTOR'S rights to an adjustment under this provision within thirty (30) days from the day of receipt of the written order. However, if the Agency procurement officer decides that the facts justify it, the Agency procurement officer may receive and act upon a proposal submitted before final payment under the Contract.

d. Failure to agree to any adjustment shall be a dispute under paragraph 11 of this Contract. However, nothing in this provision shall excuse the CONTRACTOR from proceeding with the Contract as changed.

e. Notwithstanding the terms and conditions of subparagraphs 23a and 23b, the estimated cost of this Contract and, if this Contract is incrementally funded, the funds allotted for the performance of this Contract, shall not be increased or considered to be increased except by specific written modification of the Contract indicating the new contract estimated cost and, if this contract is incrementally funded, the new amount allotted to the contract.

24. Confidentiality of Material.

a. All material given to or made available to the CONTRACTOR by virtue of this Contract, which is identified as proprietary or confidential information, will be safeguarded by the CONTRACTOR and shall not be disclosed to any individual or organization without the prior written approval of the STATE.

b. All information, data, or other material provided by the CONTRACTOR to the STATE shall be subject to the Uniform Information Practices Act, chapter 92F, HRS.

25. Publicity. The CONTRACTOR shall not refer to the STATE, or any office, agency, or officer thereof, or any state employee, including the HOPA, the CPO, the Agency procurement officer, or to the services or goods, or both, provided under this Contract, in any of the CONTRACTOR'S brochures, advertisements, or other publicity of the CONTRACTOR. All media contacts with the CONTRACTOR about the subject matter of this Contract shall be referred to the Agency procurement officer.

26. Ownership Rights and Copyright. The STATE shall have complete ownership of all material, both finished and unfinished, which is developed, prepared, assembled, or conceived by the CONTRACTOR pursuant to this Contract, and all such material shall be considered "works made for hire." All such material shall be delivered to the STATE upon expiration or termination of this Contract. The STATE, in its sole discretion, shall have the exclusive right to copyright any product, concept, or material developed, prepared, assembled, or conceived by the CONTRACTOR pursuant to this Contract.

27. Liens and Warranties. Goods provided under this Contract shall be provided free of all liens and provided together with all applicable warranties, or with the warranties described in the Contract documents, whichever are greater.

28. Audit of Books and Records of the CONTRACTOR. The STATE may, at reasonable times and places, audit the books and records of the CONTRACTOR, prospective contractor, subcontractor, or prospective subcontractor which are related to:

a. The cost or pricing data, and

b. A state contract, including subcontracts, other than a firm fixed-price contract.

29. Cost or Pricing Data. Cost or pricing data must be submitted to the Agency procurement officer and timely certified as accurate for contracts over $100,000 unless the contract is for a multiple-term or as otherwise specified by the Agency procurement officer. Unless otherwise required by the Agency procurement officer, cost or pricing data submission is not required for contracts awarded pursuant to competitive sealed bid procedures.

If certified cost or pricing data are subsequently found to have been inaccurate, incomplete, or noncurrent as of the date stated in the certificate, the STATE is entitled to an adjustment of the contract price, including profit or fee, to exclude any significant sum by which the price, including profit or fee, was increased because of the defective data. It is presumed that overstated cost or pricing data increased the contract price in the amount of the defect plus related overhead and profit or fee. Therefore, unless there is a clear indication that the defective data was not used or relied upon, the price will be reduced in such amount.

30. Audit of Cost or Pricing Data. When cost or pricing principles are applicable, the STATE may require an audit of cost or pricing data.

31. Records Retention.

(1) Upon any termination of this Contract or as otherwise required by applicable law, CONTRACTOR shall, pursuant to chapter 487R, HRS, destroy all copies (paper or electronic form) of personal information received from the STATE.

(2) The CONTRACTOR and any subcontractors shall maintain the files, books, and records that relate to the Contract, including any personal information created or received by the CONTRACTOR on behalf of the STATE, and any cost or pricing data, for at least three (3) years after the date of final payment under the Contract. The personal information shall continue to be confidential and shall only be disclosed as permitted or required by law. After the three (3) year, or longer retention period as required by law has ended, the files, books, and records that contain personal information shall be destroyed pursuant to chapter 487R, HRS or returned to the STATE at the request of the STATE.

32. Antitrust Claims. The STATE and the CONTRACTOR recognize that in actual economic practice, overcharges resulting from antitrust violations are in fact usually borne by the purchaser. Therefore, the CONTRACTOR hereby assigns to STATE any and all claims for overcharges as to goods and materials purchased in connection with this Contract, except as to overcharges which result from violations commencing after the price is established under this Contract and which are not passed on to the STATE under an escalation clause.

33. Patented Articles. The CONTRACTOR shall defend, indemnify, and hold harmless the STATE, and its officers, employees, and agents from and against all liability, loss, damage, cost, and expense, including all attorneys fees, and all claims, suits, and demands arising out of or resulting from any claims, demands, or actions by the patent holder for infringement or other improper or unauthorized use of any patented article, patented process, or patented appliance in connection with this Contract. The CONTRACTOR shall be solely responsible for correcting or curing to the satisfaction of the STATE any such infringement or improper or unauthorized use, including, without limitation: (a) furnishing at no cost to the STATE a substitute article, process, or appliance acceptable to the STATE, (b) paying royalties or other required payments to the patent holder, (c) obtaining proper authorizations or releases from the patent holder, and (d) furnishing such security to or making such arrangements with the patent holder as may be necessary to correct or cure any such infringement or improper or unauthorized use.

34. Governing Law. The validity of this Contract and any of its terms or provisions, as well as the rights and duties of the parties to this Contract, shall be governed by the laws of the State of Hawaii. Any action at law or in equity to enforce or interpret the provisions of this Contract shall be brought in a state court of competent jurisdiction in Honolulu, Hawaii.

35. Compliance with Laws. The CONTRACTOR shall comply with all federal, state, and county laws, ordinances, codes, rules, and regulations, as the same may be amended from time to time, that in any way affect the CONTRACTOR'S performance of this Contract.

36. Conflict Between General Conditions and Procurement Rules. In the event of a conflict between the General Conditions and the procurement rules, the procurement rules in effect on the date this Contract became effective shall control and are hereby incorporated by reference.

37. Entire Contract. This Contract sets forth all of the agreements, conditions, understandings, promises, warranties, and representations between the STATE and the CONTRACTOR relative to this Contract. This Contract supersedes all prior agreements, conditions, understandings, promises, warranties, and representations, which shall have no further force or effect. There are no agreements, conditions, understandings, promises, warranties, or representations, oral or written, express or implied, between the STATE and the CONTRACTOR other than as set forth or as referred to herein.

38. Severability. In the event that any provision of this Contract is declared invalid or unenforceable by a court, such invalidity or unenforceability shall not affect the validity or enforceability of the remaining terms of this Contract.

39. Waiver. The failure of the STATE to insist upon the strict compliance with any term, provision, or condition of this Contract shall not constitute or be deemed to constitute a waiver or relinquishment of the STATE'S right to enforce the same in accordance with this Contract. The fact that the STATE specifically refers to one provision of the procurement rules or one section of the Hawaii Revised Statutes, and does not include other provisions or statutory sections in this Contract shall not constitute a waiver or relinquishment of the STATE'S rights or the CONTRACTOR'S obligations under the procurement rules or statutes.

40. Pollution Control. If during the performance of this Contract, the CONTRACTOR encounters a "release" or a "threatened release" of a reportable quantity of a "hazardous substance," "pollutant," or "contaminant" as those terms are defined in section 128D-1, HRS, the CONTRACTOR shall immediately notify the STATE and all other appropriate state, county, or federal agencies as required by law. The Contractor shall take all necessary actions, including stopping work, to avoid causing, contributing to, or making worse a release of a hazardous substance, pollutant, or contaminant, and shall promptly obey any orders the Environmental Protection Agency or the state Department of Health issues in response to the release. In the event there is an ensuing cease-work period, and the STATE determines that this Contract requires an adjustment of the time for performance, the Contract shall be modified in writing accordingly.

41. Campaign Contributions. The CONTRACTOR is hereby notified of the applicability of 11-355, HRS, which states that campaign contributions are prohibited from specified state or county government contractors during the terms of their contracts if the contractors are paid with funds appropriated by a legislative body.

42. Confidentiality of Personal Information.

a. Definitions.

"Personal information" means an individual's first name or first initial and last name in combination with any one or more of the following data elements, when either name or data elements are not encrypted:

(1) Social security number;

(2) Driver's license number or Hawaii identification card number; or

(3) Account number, credit or debit card number, access code, or password that would permit access to an individual's financial information.

Personal information does not include publicly available information that is lawfully made available to the general public from federal, state, or local government records.

"Technological safeguards" means the technology and the policy and procedures for use of the technology to protect and control access to personal information.

b. Confidentiality of Material.

(1) All material given to or made available to the CONTRACTOR by the STATE by virtue of this Contract which is identified as personal information, shall be safeguarded by the CONTRACTOR and shall not be disclosed without the prior written approval of the STATE.

(2) CONTRACTOR agrees not to retain, use, or disclose personal information for any purpose other than as permitted or required by this Contract.

(3) CONTRACTOR agrees to implement appropriate "technological safeguards" that are acceptable to the STATE to reduce the risk of unauthorized access to personal information.

(4) CONTRACTOR shall report to the STATE in a prompt and complete manner any security breaches involving personal information.

(5) CONTRACTOR agrees to mitigate, to the extent practicable, any harmful effect that is known to CONTRACTOR because of a use or disclosure of personal information by CONTRACTOR in violation of the requirements of this paragraph.

(6) CONTRACTOR shall complete and retain a log of all disclosures made of personal information received from the STATE, or personal information created or received by CONTRACTOR on behalf of the STATE.

c. Security Awareness Training and Confidentiality Agreements.

(1) CONTRACTOR certifies that all of its employees who will have access to the personal information have completed training on security awareness topics relating to protecting personal information.

(2) CONTRACTOR certifies that confidentiality agreements have been signed by all of its employees who will have access to the personal information acknowledging that:

(A) The personal information collected, used, or maintained by the CONTRACTOR will be treated as confidential;

(B) Access to the personal information will be allowed only as necessary to perform the Contract; and

(C) Use of the personal information will be restricted to uses consistent with the services subject to this Contract.

d. Termination for Cause. In addition to any other remedies provided for by this Contract, if the STATE learns of a material breach by CONTRACTOR of this paragraph by CONTRACTOR, the STATE may at its sole discretion:

(1) Provide an opportunity for the CONTRACTOR to cure the breach or end the violation; or

(2) Immediately terminate this Contract.

In either instance, the CONTRACTOR and the STATE shall follow chapter 487N, HRS, with respect to notification of a security breach of personal information.

e. Records Retention.

(1) Upon any termination of this Contract or as otherwise required by applicable law, CONTRACTOR shall, pursuant to chapter 487R, HRS, destroy all copies (paper or electronic form) of personal information received from the STATE.

(2) The CONTRACTOR and any subcontractors shall maintain the files, books, and records that relate to the Contract, including any personal information created or received by the CONTRACTOR on behalf of the STATE, and any cost or pricing data, for at least three (3) years after the date of final payment under the Contract. The personal information shall continue to be confidential and shall only be disclosed as permitted or required by law. After the three (3) year, or longer retention period as required by law has ended, the files, books, and records that contain personal information shall be destroyed pursuant to chapter 487R, HRS or returned to the STATE at the request of the STATE.

Department of Hawaiian Home Lands
CONSTRUCTION GENERAL CONDITIONS
Dated March 2014

TABLE OF CONTENTS

ARTICLE/SECTION **PAGE**

ARTICLE 1: DEFINITIONS AND ABRREVIATIONS

1.1 DEFINITIONS....4
1.2 ABBREVIATIONS....8

ARTICLE 2 (reserved)

ARTICLE 3: CONTRACT

3.1 NOTICE TO PROCEED....9
3.2 RELATIONSHIP OF PARTIES....9
3.3 PERSONNEL REQUIREMENTS....10
3.4 NON-DISCRIMINATION....10
3.5 CONFLICTS OF INTEREST....10
3.6 EMPLOYMENT OF STATE RESIDENTS (§103B-3 HRS)....10

ARTICLE 4: SCOPE OF WORK

4.1 INTENT OF CONTRACT, DUTY OF CONTRACTOR....11
4.2 CHANGES....11
4.3 DUTY OF CONTRACTOR TO PROVIDE PROPOSAL FOR CHANGES....12
4.4 PRICE ADJUSTMENT (§3-125-13 HAR)....13
4.5 ALLOWANCES FOR OVERHEAD AND PROFIT (§3-125-13 HAR)....13
4.6 PAYMENT FOR DELETED MATERIAL....14
4.7 VARIATIONS IN ESTIMATED QUANTITIES (§3-125-10 HAR)....14
4.8 VARIATIONS IN BOTTOM ELEVATIONS....14
4.9 DIFFERING SITE CONDITIONS (§3-125-11 HAR)....15
4.10 COSTS AND EXPENSES....15

ARTICLE 5: CONTROL OF WORK

5.1 AUTHORITY OF THE CHAIRMAN, HAWAIIAN HOMES COMMISSION....16
5.2 AUTHORITY OF THE PROJECT MANAGER....16
5.3 AUTHORITY OF THE INSPECTOR....16
5.4 AUTHORITY OF CONSULTANT(S)....16
5.5 SHOP DRAWINGS AND OTHER SUBMITTALS....16
5.6 COORDINATION OF CONTRACT DOCUMENTS....19
5.7 INTERPRETATION OF DRAWINGS AND SPECIFICATIONS....21
5.8 EXAMINATION OF DRAWINGS, SPECIFICATIONS, PROJECT SITE....21

5.9 COOPERATION BETWEEN THE CONTRACTOR AND THE DEPARTMENT 21
5.10 INSPECTION 23
5.11 REMOVAL OF DEFECTIVE, NON-CONFORMING AND UNAUTHORIZED WORK.....23
5.12 VALUE ENGINEERING INCENTIVE.....24
5.13 SUBCONTRACTS 26

ARTICLE 6: CONTROL OF MATERIALS AND EQUIPMENT

6.1 MATERIALS AND EQUIPMENT 28
6.2 SOURCE OF SUPPLY AND QUALITY OF MATERIALS 28
6.3 SUBSTITUTION OF MATERIALS AND EQUIPMENT AFTER BID OPENING 28
6.4 ASBESTOS CONTAINING MATERIALS.....29
6.5 TEST SAMPLES 29
6.6 MATERIAL SAMPLES 29
6.7 NON-CONFORMING MATERIALS.....30
6.8 HANDLING MATERIALS.....30
6.9 STORAGE OF MATERIALS 30
6.10 PROPERTY RIGHTS IN MATERIALS.....30
6.11 ANTI-TRUST CLAIMS 30

ARTICLE 7: PROSECUTION AND PROGRESS

7.1 PROSECUTION OF THE WORK.....31
7.2 COMMENCEMENT REQUIREMENTS 31
7.3 INSURANCE REQUIREMENTS.....32
7.4 PERMITS AND LICENSES 34
7.5 NORMAL WORKING HOURS 34
7.6 HOURS OF LABOR (§104-2 HRS).....34
7.7 PREVAILING WAGES (§104-2 HRS & FEDERAL DAVIS-BACON).....35
7.8 FAILURE TO PAY REQUIRED WAGES (§104-4 HRS OR FEDERAL DAVIS-BACON).....36
7.9 PAYROLLS AND PAYROLL RECORDS (§104-3 HRS) 36
7.10 OVERTIME AND NIGHT WORK.....36
7.11 OVERTIME AND NIGHT PAYMENT FOR DEPARTMENT INSPECTION SERVICE.....37
7.12 LIMITATIONS OF OPERATIONS.....37
7.13 ASSIGNMENT OR CHANGE OF NAME (§3-125-14 HAR).....38
7.14 LAWS TO BE OBSERVED.....39
7.15 PATENTED DEVICES, MATERIALS AND PROCESSES 39
7.16 SANITARY, HEALTH AND SAFETY PROVISOINS 40
7.17 PROTECTION OF PERSONS AND PROPERTY 40
7.18 ARCHAEOLOGICAL SITES 41
7.19 RESPONSIBILITY FOR DAMAGE CLAIMS; INDEMNITY 41
7.20 CHARACTER OF WORKERS OR EQUIPMENT 42
7.21 CONTRACT TIME 43
7.22 CONSTRUCTION SCHEDULE.....46
7.23 STATEMENT OF WORKING DAYS 46

7.24 SUSPENSION OF WORK (§3-125-7 HAR) 46
7.25 DISPUTES AND CLAIMS (§3-126-3 HAR) 48
7.26 FAILURE TO COMPLETE THE WORK ON TIME....50
7.27 TERMINATION OF CONTRACTOR FOR CAUSE (§3-125-18 HAR)....51
7.28 TERMINATION FOR CONVENIENCE (§3-125-22 HAR)....52
7.29 CORRECTING DEFECTS....53
7.30 FINAL CLEANING 53
7.31 SUBSTANTIAL COMPLETION AND FINAL INSPECTION....53
7.32 PROJECT ACCEPTANCE DATE....54
7.33 FINAL SETTLEMENT OF CONTRACT 55
7.34 CONTRACTOR'S RESPONSIBILITY FOR WORK; RISK OF LOSS....56
7.35 GUARANTEE OF WORK....56
7.36 WORK OF AND CHARGES BY UTILITIES 57
7.37 RIGHT TO AUDIT RECORDS 57
7.38 RECORDS MAINTENANCE, RETENTION AND ACCESS....58
7.39 COST OR PRICING DATA....58
7.40 CONFIDENTIALITY OF MATERIAL....58
7.41 PUBLICITY....59
7.42 OWNERSHIP RIGHTS AND COPYRIGHT 59
7.43 GOVERNING LAW....59
7.44 SEVERABILITY 59
7.45 WAIVER....59
7.46 UTILITIES AND SERVICES 59

ARTICLE 8: MEASUREMENT AND PAYMENT

8.1 MEASUREMENT OF QUANTITIES 61
8.2 NO WAIVER OF LEGAL RIGHTS 61
8.3 PAYMENT FOR ADDITIONAL WORK 61
8.4 PROGRESS AND/OR PARTIAL PAYMENTS 65
8.5 PROMPT PAYMENT (§3-125-23 HAR) 66
8.6 RETAINAGE....67
8.7 WARRANTY OF CLEAR TITLE 67
8.8 FINAL PAYMENT 68
8.9 STATE'S RIGHT TO OFFSET....68

ARTICLE 1: DEFINITIONS AND ABBREVIATIONS

1.1 DEFINITIONS. Whenever the following terms or pronouns are used in these Construction General Conditions, or in any contract documents or instruments where these Construction General Conditions govern, the intent and meaning shall be interpreted as follows:

ADDENDUM (plural - Addenda). A written or graphic document, including Drawings and Specifications, issued by the Chairman during the bidding period which modifies or interprets the bidding documents, by additions, deletions, clarifications or corrections, which shall be considered and made a part of the bid proposal and the contract.

ADDITION (to the contract sum). Amount added to the contract sum by Change Order.

ADMINISTRATIVE RULES. Hawaii Administrative Rules for Chapter 103-D of the Hawaii Revised Statutes.

ADVERTISEMENT. A public announcement inviting bids for work to be performed or materials to be furnished.

BAD WEATHER DAY. When weather or other conditions prevent a minimum of four hours of work with the Contractor's normal work force on controlling items of work at the site. (See excess bad weather day.)

BENEFICIAL OCCUPANCY. The point of project completion when the Department can use the constructed facility in whole or in part for its intended purpose even though substantial completion may not be achieved.

BID. See PROPOSAL.

BID SECURITY. The security furnished by the Bidder from which the Department may recover its damages in the event the Bidder breaches its promise to enter into a contract with the Department and fails to execute the required bonds covering the work contemplated, if its proposal is accepted.

BIDDER. Any individual, partnership, firm, corporation, joint venture, or other legal entity submitting, directly or through a duly authorized representative or agent, a proposal for the work contemplated.

BIDDING DOCUMENTS. The advertisement "Notice to Contractors", or invitation to bid, instructions to Bidders, proposal requirements, the bid form and the proposed Contract Documents including all addenda issued prior to receipt of Bids.

BULLETIN. A written notice to the Contractor requesting a price and / or time proposal for contemplated changes preparatory to the issuance of a field order or change order.

BY OR TO THE PROJECT MANAGER. To avoid cumbersome and confusing repetition of expressions in these General Conditions, it is provided that whenever the following words or words of like import are used, they shall be understood as if they were followed by the words "by the Project Manager" or "to the Project Manager", unless the context clearly indicates another meaning: contemplated, required, determined, directed, specified, authorized, ordered, given, designated, indicated, considered necessary, deemed necessary, permitted, reserved, suspended, established, approval, approved, disapproved, acceptable, unacceptable, suitable, accepted, satisfactory, unsatisfactory, sufficient, insufficient, rejected or condemned.

CALENDAR DAY. Any day shown on the calendar beginning at midnight and ending at midnight the following day. If no designation of calendar or working day is made, "day" shall mean calendar day.

CHAIRMAN. The Chairman of the Hawaiian Homes Commission, Department of Hawaiian Home Lands.

CHANGE ORDER. A written order signed by the Chairman that establishes the full payment and final settlement of all claims for direct, indirect and consequential costs, including costs of delays, and establishes any adjustments to contract time related to the work covered and affected by one or more field orders, or for change work done or agreed to be done without issuance of a separate field order. A change order signed by all the parties to the contract constitutes a supplemental agreement.

COMPLETION. See SUBSTANTIAL COMPLETION and FINAL COMPLETION.

CONSULTANT. A person, firm or corporation having a contract with the Department to furnish services with respect to the project.

CONTRACT. The written agreement between the Contractor and the Department by its Chairman, by which the Contractor is bound to furnish all labor, equipment, and materials and to perform the specified work within the contract time stipulated, and by which DHHL is obligated to compensate the Contractor therefor at the prices set forth therein. The contract shall include the Contract Documents, also any and all amendments, and change orders, which are required to complete the construction in an acceptable manner.

CONTRACT COMPLETION DATE. The calendar day on which all work on the project, required by the contract, must be completed. See CONTRACT TIME and FINAL COMPLETION.

CONTRACT DOCUMENTS. The Contract, Addenda (which pertain to the Contract Documents, Contractor's Proposal (including Wage Schedule, List of Subcontractors and other documentation accompanying the Bid and any post bid documentation submitted prior to the Notice of Award) when attached as an exhibit to the contract, the Notice to Proceed, the Bonds, these General Conditions, the SPECIAL CONDITIONS, the Specifications and the Drawings as the same are more specifically identified in the contract together with all written Amendments, Change Orders, Field Orders, any written order for minor changes in the work and Project Manager's written interpretations and clarifications issued on or after the effective date of the contract.

CONTRACT PRICE. The amount designated on the face of the contract for the performance of work including allowances, if any.

CONTRACT TIME. The number of working or calendar days provided in the contract for completion of the contract, exclusive of authorized time extensions. The number of days shall begin running on the effective date in the Notice to Proceed. If in lieu of providing a number of working or calendar days, the contract requires completion by a certain date, the work shall be completed by that date.

CONTRACTOR. Any individual, partnership, firm, corporation, joint venture, or other legal entity undertaking the execution of the work under the terms of the contract with the State of Hawaii, and acting directly or through its agents, or employees.

DEPARTMENT. The Department of Hawaiian Home Lands (abbreviated DHHL).

DRAWINGS (or Plans). The contract drawings in graphic or pictorial form, which show the design, location, character, dimensions and details of the work to be done and which shall be a part of the Contract Documents.

EQUAL OR APPROVED EQUAL. Whenever this term is used in the drawings or specifications, it shall be interpreted to mean a brand or article, prequalified in accordance with Section 6.3 SUBSTITUTION OF MATERIALS AND EQUIPMENT AFTER BID OPENING, that may be used in place of the one specified.

EXCESS BAD WEATHER DAY. A working day on which inclement weather prevents work on the contract and is beyond the average weather for the location of the project and the time of the year.

FIELD ORDER. A written order issued by the Project Manager to the Contractor requiring the contract work to be performed in accordance with a change or changes in the work. A field order may (1) establish a price adjustment and/or time adjustment in an amount the Project Manager believes is reasonable for the change; or (2) may declare that the Project Manager does not intend to adjust contract time or price for the work; or (3) may request the Contractor to submit a proposal for an adjustment to the contract time and/or price by a certain date.

FINAL COMPLETION. The date set by the Chairman that all work required by the contract and any amendments or changes thereto is in full compliance with the contract.

FORCE ACCOUNT. Term used when work is ordered to be done at the sole option of the Department and is to be billed for at cost of labor, materials and equipment, insurance(s), taxes, etc., plus a percentage for overhead and profit.

GUARANTEE. Legally enforceable assurance of the duration of satisfactory performance of quality of a product or work.

HAZARDOUS MATERIALS. Any and all radioactive materials, asbestos, polychlorinated biphenyls, petroleum, crude oil, chemicals known to cause cancer or reproductive toxicity, pollutants, contaminants, toxic substances or materials cited in Hazardous Material Laws. Abandoned motor vehicles or parts thereof are not hazardous material.

HOLIDAYS. The days of each year which are set apart and established as State holidays pursuant to Chapter 8, Hawaii Revised Statutes.

INSPECTOR. The person assigned by the Department to make detailed inspections of contract performance and materials supplied for the work.

LAWS. All Federal, State, City and County Laws, ordinances, rules and regulations, and standard specifications, including any amendments thereto effective as of the date of the call for sealed bids.

LETTER OF AWARD. A written notice from the Chairman to the successful Bidder(s) stating that the Department has accepted its proposal.

LIQUIDATED DAMAGES. The amount prescribed in the Special Conditions, LIQUIDATED DAMAGES to be paid to the Department or to be deducted from any payments due or to become due the Contractor for each working day or calendar day (as applicable) delay in completing the whole or any specified portion of the work beyond the Contract Time.

MAJOR UNIT PRICE ITEM. A unit price item which, when extended on its estimated quantities in the proposal form, exceeds five percent (5%) of the total base bid proposal less any allowance and contingent items included in the proposal.

NON-CONFORMING WORK. Work that does not meet the requirements of the Contract Documents.

NOTICE TO PROCEED. A written notice from the Project Manager to the Contractor advising it of the date on which it is to begin the prosecution of the work, which date shall also be the beginning of Contract Time.

POST CONTRACT DRAWINGS. Drawings issued after the award of the contract for the purpose of clarification and / or changes to the work indicated in the original drawings and which may be made a part of the contract.

PROJECT ACCEPTANCE DATE. The calendar day on which the Project Manager accepts the project as sufficiently completed in compliance with the contract so that the Department can occupy or utilize the work for its intended use. See SUBSTANTIAL COMPLETION.

PROJECT CONTRACT LIMITS (or CONTRACT ZONE). The portion of the site as delineated on the drawings which define the Contractor's primary area of operation for the prosecution of the work. It does not define the exact limits of all construction that may be required under the contract.

PROJECT MANAGER. The Department's Contract Administrator as described in ARTICLE 5, CONTROL OF WORK.

PROJECT GUARANTEE. A guarantee issued by the Contractor to the Department. See GUARANTEE.

PROPOSAL (BID). The executed document submitted by a Bidder in the prescribed manner, in response to a request for proposals or invitation to Bid, to perform at the prices quoted, for the work specified under the contract, within the time prescribed for performance.

PROPOSAL FORM. The form prepared by the Department on which the written offer or formal bid for the work to be done is submitted by the Bidder. By submitting a bid on the proposal form, a Bidder adopts the language therein as its own.

PUNCHLIST. A list compiled by the Project Manager (or Contractor) stating work yet to be completed or corrected by the Contractor in order to substantially complete or finally complete the contract requirements.

SHOP DRAWINGS/SUBMITTALS. All drawings, diagrams illustrations, schedules and other data or information which are prepared or assembled by the Contractor and submitted by Contractor to illustrate some portion of the work.

SPECIAL CONDITIONS. The specific clauses that supplements or modify the standard clauses of the GENERAL CONDITIONS setting forth conditions or requirements peculiar to the individual project under consideration, which are not thoroughly or satisfactorily covered, described or explained in these GENERAL CONDITIONS.

SPECIFICATIONS. That portion of the Contract Documents consisting of written descriptions for materials, equipment, construction systems, standards, workmanship, directions, provisions and

requirements that pertain to the method and manner of performing the work and certain administrative requirements applicable thereto.

STATE. The State of Hawaii acting through its authorized representative.

SUBCONTRACT. Any written agreement between the Contractor and its subcontractors which contains the conditions under which the subcontractor is to perform a portion of the work for the Contractor.

SUBCONTRACTOR. An individual, partnership, firm, corporation, joint venture or other legal entity, as covered in Chapter 444, Hawaii Revised Statutes, which enters into an agreement with the Contractor to perform a portion of the work for the Contractor.

SUBSTANTIAL COMPLETION. The status of the project when the Contractor has completed all the work and (1) all utilities and services are connected and working; (2) all equipment is in acceptable working condition; (3) additional activity by the Contractor to correct punchlist items as described herein will not prevent or disrupt use of the work or the facility in which the work is located; and 4) the building, structure, improvement or facility can be used for its intended purpose.

SUPERINTENDENT. The employee of the Contractor, authorized to receive and fulfill instructions from the Project Manager, who is charged with the responsibility of all the work.

SURETY. The qualified individual, firm or corporation other than the Contractor, which executes a bond with and for the Contractor to ensure its acceptable performance of the contract.

UNUSUALLY SEVERE WEATHER. Uncommonly harsh weather including but not limited to hurricanes, tornadoes, tropical storms and tropical depressions.

WORK. The furnishing of all labor, materials, equipment, and other incidentals necessary or convenient for the successful completion of the project and the execution of all the duties and obligations imposed by the contract.

WORKING DAY. A calendar day, exclusive of Saturdays, Sundays and State-recognized legal holidays for the month in question.

1.2 ABBREVIATIONS

DHHL	Department of Hawaiian Home Lands.
HAR	Hawaii Administrative Rules
HRS	Hawaii Revised Statutes
VECP	Value Engineering Cost Proposal

~ END OF ARTICLE 1~

ARTICLE 2: [reserved]

ARTICLE 3: CONTRACT

3.1 NOTICE TO PROCEED

3.1.1 After the contract is fully executed and signed by the Chairman, the Contractor will be sent a formal Notice to Proceed letter advising the Contractor of the date on which it may proceed with the work. The Contractor shall be allowed ten (10) consecutive working days from said date to begin its work. In the event that the Contractor refuses or neglects to start the work, the Chairman may terminate the contract in accordance with Section 7.27, TERMINATION OF CONTRACT FOR CAUSE.

3.1.2 The Contractor may commence its operations strictly at its own risk prior to receipt of the formal notice to proceed, provided it makes a written request and has received approval from the Chairman in writing. All work performed shall be conducted in accordance with Section 7.1, PROSECUTION OF THE WORK.

3.1.3 In certain cases, the Department, with agreement of the Contractor, may issue a Notice to Proceed before full execution of the contract by the Chairman and it may further issue a Notice to Proceed concurrently with the Notice of Award.

3.1.4 In the event the Notice to Proceed is not issued within one hundred eighty (180) days after (1) the date the contract is executed by all parties; or (2) for projects funded with State Capital Improvement Project (CIP) funds, the date that the written certificate that funds are available is issued, whichever is later, the Contractor may submit a claim for increased labor and material costs (but not overhead costs) which are directly attributable to the delay beyond the first one hundred eighty (180) days. Such claims shall be accompanied with the necessary documentation to justify the claim. No payment will be made for assumed escalation costs.

3.2 RELATIONSHIP OF PARTIES. Independent Contractor Status and Responsibilities, including Tax Responsibilities.

3.2.1 In the performance of services required under this Contract, the CONTRACTOR is an "independent contractor," with the authority and responsibility to control and direct the performance and details of the work and services required under this Contract; however, the STATE shall have a general right to inspect work in progress to determine whether, in the STATE's opinion, the services are being performed by the CONTRACTOR in compliance with this Contract. Unless otherwise provided by special condition, it is understood that the STATE does not agree to use the CONTRACTOR exclusively, and that the CONTRACTOR is free to contract to provide services to other individuals or entities while under contract with the STATE.

3.2.2 The CONTRACTOR and the CONTRACTOR's employees and agents are not by reason of this Contract, agents or employees of the State for any purpose, and the CONTRACTOR and the CONTRACTOR's employees and agents shall not be entitled to claim or receive from the STATE any vacation, sick leave, retirement, workers' compensation, unemployment insurance, or other benefits provided to state employees.

3.2.3 The CONTRACTOR shall be responsible for the accuracy, completeness, and adequacy of the CONTRACTOR's performance under this Contract. Furthermore, the CONTRACTOR intentionally, voluntarily, and knowingly assumes the sole and entire liability to the CONTRACTOR's employees

and agents, and to any individual not a party to this Contract, for all loss, damage, or injury caused by the CONTRACTOR, or the CONTRACTOR's employees or agents in the course of their employment.

3.2.4 The CONTRACTOR shall be responsible for payment of all applicable federal, state, and county taxes and fees which may become due and owing by the CONTRACTOR by reason of this Contract, including but not limited to (i) income taxes, (ii) employment related fees, assessments, and taxes, and (iii) general excise taxes. The CONTRACTOR also is responsible for obtaining all licenses, permits, and certificates that may be required in order to perform this Contract.

3.2.5 The CONTRACTOR shall obtain a general excise tax license from the Department of Taxation, State of Hawaii, in accordance with Section 237-9, HRS, and shall comply with all requirements thereof.

2.2.6 The CONTRACTOR is responsible for securing all employee-related insurance coverage for the CONTRACTOR and the CONTRACTOR's employees and agents that is or may be required by law, and for payment of all premiums, costs, and other liabilities associated with securing the insurance coverage.

3.3 PERSONNEL REQUIREMENTS:

3.3.1 The CONTRACTOR shall secure, at the CONTRACTOR's own expense, all personnel required to perform this Contract.

3.3.2 The CONTRACTOR shall ensure that the CONTRACTOR's employees or agents are experienced and fully qualified to engage in the activities and perform the services required under this Contract, and that all applicable licensing and operating requirements imposed or required under federal, state, or county law, and all applicable accreditation and other standards of quality generally accepted in the field of the activities of such employees and agents are complied with and satisfied.

3.4 NONDISCRIMINATION. No person performing work under this Contract, including any subcontractor, employee, or agent of the Contractor, shall engage in any discrimination that is prohibited by any applicable federal, state, or county law.

3.5 CONFLICTS OF INTEREST. The CONTRACTOR represents that neither the CONTRACTOR, nor any employee or agent of the CONTRACTOR, presently has any interest, and promises that no such interest, direct or indirect, shall be acquired, that would or might conflict in any manner or degree with the CONTRACTOR's performance under this Contract.

3.6 EMPLOYMENT OF STATE RESIDENTS (§103B-3 HRS). The Contractor shall ensure that Hawaii residents comprise not less than eighty per cent of the workforce employed to perform the contract work on the project. The 80% requirement shall be determined by dividing the total number of hours worked on the contract by Hawaii residents, by the total number of hours worked on the contract by all employees of the Contractor in the performance of the contract. The hours worked by any Subcontractor of the Contractor shall count towards the calculation for this section. The hours worked by employees within shortage trades, as determined by the Department of Labor and Industrial Relations (DLIR), shall not be included in the calculation for this section.

~END OF ARTICLE 3~

ARTICLE 4: SCOPE OF WORK

4.1 INTENT OF CONTRACT, DUTY OF CONTRACTOR. The intent of the Contract is to provide for the construction, complete in every detail, of the work described at the accepted bid price and within the time established by the contract. The Contractor has the duty to furnish all labor, materials, equipment, tools, transportation, incidentals and supplies and to determine the means, methods and schedules required to complete the work in accordance with the drawings, specifications and terms of the contract.

4.1.1 ENTIRE CONTRACT. This Contract sets forth all of the Contract, conditions, understandings, promises, warranties, and representations between the STATE and the CONTRACTOR relative to this Contract. This Contract supersedes all prior Contracts, conditions, understandings, promises, warranties and representations, which shall have no further force or effect. There are no Contracts, conditions, understandings, promises, warranties, or representations, oral or written, express or implied, between the STATE and the CONTRACTOR other than as set forth or as referred to herein.

4.2 CHANGES. The Project Manager may at any time, during the progress of the work, by written order, and without notice to the sureties, make changes in the work as may be found to be necessary or desirable. Such changes shall not invalidate the Contract nor release the Surety, and the Contractor will perform the work as changed, as though it had been a part of the original Contract.

4.2.1 MINOR CHANGES. Minor changes in the work may be directed by the Project Manager with no change in contract price or time of performance. Minor changes are consistent with the intent of the Contract Documents and do not substantially alter the type of work to be performed or involve any adjustment to the contract sum or extension of the contract time.

4.2.2 ORAL ORDERS

4.2.2.1 Any oral order, direction, instruction, interpretation or determination from the Chairman or any other person which in the opinion of the Contractor causes any change, shall be considered as a change only if the Contractor gives the Chairman written notice of its intent to treat such oral order, direction, instruction, interpretation or determination as a change directive. Such written notice must be delivered to both the Chairman and the Project Manager before the Contractor acts in conformity with the oral order, direction, instruction, interpretation or determination, but not more than five (5) days after delivery of the oral order to the Contractor. The written notice shall state the date, circumstances, whether a time extension will be requested, and source of the order that the Contractor regards as a change. Such written notice may not be waived and shall be a condition precedent to the filing of any claim by the Contractor. Unless the Contractor acts in accordance with this procedure, any such oral order shall not be treated as a change for which the Contractor may make a claim for an increase in the contract time or contract price related to such work.

4.2.2.2 No more than five (5) days after receipt of the written notice from the Contractor, a Field Order shall be issued for the subject work if the Department agrees that it constitutes a change. If no Field Order is issued in the time established, it shall be deemed a rejection of Contractor's claim for a change. If the Contractor objects to the failure to issue a Field Order, it shall file a written protest with the Chairman within thirty (30) days after delivery to the Chairman of the Contractor's written notice of its intention to treat the oral order as a change. In all cases, the Contractor shall proceed with the work. The protest shall be determined as provided in Section 7.25, DISPUTES AND CLAIMS.

4.2.3 FIELD ORDERS. All changes will be set forth in a field order or change order. Upon receipt of a field order, the Contractor shall proceed with the changes as ordered. If the Contractor does not agree

with any of the terms or conditions or in the adjustment or non-adjustment to the contract time and/or contract price set forth therein, it shall file with the Chairman a written protest setting forth its reasons in detail within thirty (30) days after receipt of the field order. In all cases, the Contractor shall proceed with the work as changed. The protest shall be determined as provided in Section 7.25, DISPUTES AND CLAIMS. Failure to file such a protest within the time specified shall constitute agreement on the part of the Contractor with the terms, conditions, amounts and adjustments or non-adjustment to the contract price and/or contract time set forth in the field order.

4.2.4 CHANGE ORDERS

4.2.4.1 The Department will issue sequentially numbered change orders at times it deems appropriate during the contract period. A change order may contain the adjustment in contract price and / or time for a number of Field Orders. No payment for any change will be made until the change order is issued.

4.2.4.2 The penal sum of the Surety Performance and Payment Bonds will be adjusted by the amount of each and every change order.

4.3 DUTY OF CONTRACTOR TO PROVIDE PROPOSAL FOR CHANGES

4.3.1 A Field Order may request the Contractor to supply the Department with a proposal for an adjustment to the contract time or contract price for the work described therein. Any such request for a proposal shall not affect the duty of the Contractor to proceed as ordered with the work described in the Field Order.

4.3.2 The Project Manager from time to time may issue a Bulletin to the Contractor requesting price and / or time adjustment proposals for contemplated changes in the work. A Bulletin is not a directive for the Contractor to perform the work described therein.

4.3.3 Within seven (7) days after receipt of a Bulletin or Field Order containing a request for proposal, the Contractor shall submit to the Project Manager a detailed written statement setting forth all charges the Contractor proposes for the change and the proposed adjustment of the contract time, all properly itemized and supported by sufficient substantiating data to permit evaluation. No time extension will be granted for delays caused by late Contractor pricing of changes or proposed changes. If the project is delayed because Contractor failed to submit the cost proposal within the seven (7) days, or longer as allowed by the Project Manager, liquidated damages will be assessed in accordance with Section 7.26, FAILURE TO COMPLETE THE WORK ON TIME.

4.3.4 No payment shall be allowed to the Contractor for pricing or negotiating proposed or actual changes. No time extension will be granted for delay caused by late Contractor pricing of changes or proposed changes.

4.3.5 The Chairman may accept the entire proposal, or any discreet cost item contained within the proposal or the proposed adjustment to contract time by a notice in writing to the Contractor delivered to the Contractor within thirty (30) days after receipt of the proposal. The written acceptance by the Chairman of all or part of the Contractor's proposal shall create a binding agreement between the parties for that aspect of the change.

4.3.6 If the Department refuses to accept the Contractor's entire proposal, the Chairman may issue a Field Order for the work; or if a Field Order has already been issued, the Department may issue a supplemental Field Order establishing the remaining adjustments to contract price and/or contract time for the ordered changes. If the Contractor disagrees with any term, condition or adjustment

contained in such Field Order or supplemental Field Order, it shall follow the protest procedures set forth in and be subject to the other terms of Subsection 4.2.3, FIELD ORDERS.

4.4 PRICE ADJUSTMENT (§3-125-13 HAR)

4.4.1 Any adjustment in the contract price pursuant to a change or claim in this contract shall be made in one or more of the following ways:

4.4.1.1 By agreement on a fixed price adjustment before commencement of the pertinent performance or as soon thereafter as practicable;

4.4.1.2 By unit prices specified in the contract or subsequently agreed upon;

4.4.1.3 Whenever there is a variation in quantity for any work covered by any line item in the schedule of costs submitted as required by Section 7.2, COMMENCEMENT REQUIREMENTS, by the Department at its discretion, adjusting the lump sum price proportionately;

4.4.1.4 In such other manner as the parties may mutually agree;

4.4.1.5 At the sole option of the Project Manager, by the costs attributable to the event or situation covered by the change, plus appropriate profit or fee, all as specified in Section 4.5, ALLOWANCES FOR OVERHEAD AND PROFIT and the force account provision of Section 8.3, PAYMENT FOR ADDITIONAL WORK; or

4.4.1.6 In the absence of an agreement between the two parties, by a unilateral determination by the Department of the reasonable and necessary costs attributable to the event or situation covered by the change, plus appropriate profit or fee, all as computed in accordance with applicable Sections of Chapters 3-123 and 3-126 of the Hawaii Administrative Rules and Regulations, and Section 4.5, ALLOWANCES FOR OVERHEAD AND PROFIT.

4.5 ALLOWANCES FOR OVERHEAD AND PROFIT (§3-125-13 HAR)

4.5.1 In determining the cost or credit to the Department resulting from a change, the allowances for all overhead, including, extended overhead resulting from adjustments to contract time (including home office, branch office and field overhead, and related delay impact costs) and profit combined, shall not exceed the percentages set forth below:

4.5.1.1 For the Contractor, for any work performed by its own labor forces, twenty percent (20%) of the direct cost;

4.5.1.2 For each subcontractor involved, for any work performed by its own forces, twenty percent (20%) of the direct cost;

4.5.1.3 For the Contractor or any subcontractor, for work performed by their subcontractors, ten percent (10 %) of the amount due the performing subcontractor.

4.5.1.4 Field overhead includes, but is not limited to all costs of supervision, engineering, clerical, layout, temporary facilities, improvements and structures, all general condition expenditures, storage, transport and travel, housing, small tools (as defined in 8.3.4.5(h), pickup trucks and automobiles.

4.5.2 Not more than three markup allowance line item additions not exceeding the maximum percentage shown above will be allowed for profit and overhead, regardless of the number of tier subcontractors.

4.5.3 The allowance percentages will be applied to all credits and to the net increase of direct costs where work is added and deleted by the changes.

4.6 PAYMENT FOR DELETED MATERIAL

4.6.1 CANCELED ORDERS. If acceptable material was ordered by the Contractor for any item deleted by an ordered change in the work prior to the date of notification of such deletion by the Project Manager, the Contractor shall use its best efforts to cancel the order. The Department shall pay reasonable cancellation charges required by the supplier excluding any markup for overhead and profit to the Contractor.

4.6.2 RETURNED MATERIALS - If acceptable deleted material is in the possession of the Contractor or is ultimately received by the Contractor, if such material is returnable to the supplier and the Project Manager so directs, the material shall be returned and the Contractor will be paid for the reasonable charges made by the supplier for the return of the material, excluding any markup for overhead and profit to the Contractor. The cost to the Contractor for handling the returned material will be paid for as provided in Section 4.4, PRICE ADJUSTMENT.

4.6.3 UNCANCELLED MATERIALS. If orders for acceptable deleted material cannot be canceled at a reasonable cost, it will be paid for at the actual cost to the Contractor including an appropriate markup for overhead and profit as set forth in Section 4.5, ALLOWANCES FOR OVERHEAD AND PROFIT. In such case, the material paid for shall become the property of the Department and the cost of further storage and handling shall be paid for as provided in Section 4.4, PRICE ADJUSTMENT.

4.7 VARIATIONS IN ESTIMATED QUANTITIES (§3-125-10 HAR)

4.7.1 Where the quantity of a major unit price item in this contract is estimated on the proposal form and where the actual quantity of such pay item varies more than fifteen percent (15%) above or below the estimated quantity stated in this contract, an adjustment in the contract price shall be made upon demand of either party. The adjustment shall be based upon any increase or decrease in costs due solely to the variation above one hundred fifteen percent (115%) or below eighty-five percent (85%) of the estimated quantity. The adjustment shall be subject to Section 4.4 PRICE ADJUSTMENT and Section 4.5, ALLOWANCES FOR OVERHEAD AND PROFIT. If the quantity variation is such as to cause an increase in the time necessary for completion, the Chairman shall, upon receipt of a written request for an extension of time within thirty (30) days of the item's completion, ascertain the facts and make such adjustment to the completion date as the Chairman finds justified.

4.8 VARIATIONS IN BOTTOM ELEVATIONS. The Contractor shall plan and construct to the bottom elevations of footings, piles, drilled shafts, or cofferdams as shown on the drawings. When the bottom of a footing, pile, drilled shaft, or cofferdam is shown as an estimated or approximate elevation, the Contractor shall plan and construct to that elevation or to any deeper elevation required by the drawings or direction of the Project Manager. In the event the bottom elevation is lowered, the Contractor shall be entitled to additional payment in accordance with Sections 4.4 PRICE ADJUSTMENT and 4.5 ALLOWANCES FOR OVERHEAD AND PROFIT. In the event the bottom elevation is raised, the Department shall be entitled to a credit in accordance with Sections 4.2 CHANGES, 4.4, PRICE ADJUSTMENT and 4.5, ALLOWANCES FOR OVERHEAD AND PROFIT.

4.9 DIFFERING SITE CONDITIONS (§3-125-11 HAR)

4.9.1 During the progress of the work, if the Contractor encounters conditions at the site differing materially from those shown in the drawings and specifications, Contractor shall promptly, and before any such conditions are disturbed or damaged (except in an emergency as required by Subsection 7.17.8. EMERGENCIES), notify the Project Manager in writing of:

4.9.1.1 Subsurface or latent physical conditions at the site differing materially from those indicated in the contract; or

4.9.1.2 Unknown physical conditions at the site, of an unusual nature differing materially from those ordinarily encountered and generally recognized as inherent in work of the character provided for in this contract. Unclaimed motor vehicles or parts thereof and discarded materials or unclaimed items are not unknown or unforeseen physical conditions. (See also Section 5.8, EXAMINATION OF DRAWINGS, SPECIFICATIONS, PROJECT SITE).

4.9.2 After receipt of written notice, the Chairman shall promptly investigate the site, and if it is found that such conditions do materially differ and cause an increase in the Contractor's cost of, or the time required to, perform any part of the work, whether or not changed as a result of such conditions, an adjustment shall be made and the contract modified accordingly. Any adjustment in contract price made pursuant to this Section 4.9. DIFFERING SITE CONDITIONS (§3-125-11 HAR) shall be determined in accordance with Sections 4.4, PRICE ADJUSTMENT and 7.25, DISPUTES AND CLAIMS.

4.9.3 Nothing contained in this Section 4.9, DIFFERING SITE CONDITONS shall be grounds for an adjustment in compensation if the Contractor had actual knowledge or should have known of the existence of such conditions prior to the submission of bids.

4.10 COSTS AND EXPENSES. Any reimbursement due the CONTRACTOR for per diem and transportation expenses under this Contract shall be subject to Chapter 3-123 (Cost Principles) of the Procurement Rules and the following guidelines:

4.10.1 Reimbursement for air transportation shall be actual cost or coach class air fare, whichever is less.

4.10.2 Reimbursement for ground transportation costs shall not exceed the actual cost of renting an intermediate-sized vehicle.

4.10.3 Unless prior written approval of the CHAIRMAN is obtained, reimbursement for subsistence allowance (i.e., hotel and meals, etc.) shall not exceed the applicable daily authorized rates for interisland or out-of-state travel that are set forth in the current Governor's Executive Order authorizing adjustments in salaries and benefits for state officers and employees in the Chairman branch who are excluded from collective bargaining coverage.

~END OF ARTICLE 4~

ARTICLE 5: CONTROL OF WORK

5.1 AUTHORITY OF THE CHAIRMAN - The Chairman shall make final and conclusive decisions on all questions which may arise relating to the quality and acceptability of the materials furnished and work performed, the manner of performance and the rate of progress of the work, the interpretation of the plans and specifications, the acceptable fulfillment of the contract on the part of the Contractor, the compensation under the contract and the mutual rights of the parties to the contract. The Chairman shall have the authority to enforce and make effective such decisions and orders at the Contractor's expense when the Contractor fails to carry such decisions and orders out promptly and diligently. The Chairman shall have the authority to suspend the work wholly or in part as provided in Section 7.24, SUSPENSION OF WORK.

5.2 AUTHORITY OF THE PROJECT MANAGER. The Project Manager has the authority to act on behalf of the Department on all matters regarding the contract and the work that are not reserved for the Chairman. The Project Manager's authority is vested exclusively in the Project Manager except when specific authority to act for the Project Manager has been delegated to a specific person or persons. Such delegation of authority may be established by the Contract Documents; otherwise, it is not effective or binding upon the Department until such written notification of the delegation is received by the Contractor. The Administrator of the Land Development Division of the Department, or his designee, shall also have authority to act on behalf of the Department on all matters regarding the contract that are not reserved for the Chairman.

5.3 AUTHORITY OF THE INSPECTOR

5.3.1 The Inspector shall observe and inspect the contract performance and materials. The Inspector does not have any authority vested in the Project Manager unless specifically delegated in writing.

5.3.2 The Inspector may offer advice and recommendations to the Contractor, but any such advice or recommendations are not directives from the Project Manager.

5.3.3 The Inspector has no authority to allow deviations from the Contract Documents and may reject any and all work that the Inspector deems is not in conformity with the contract requirements. Failure of an Inspector at any time to reject non-conforming work shall not be considered a waiver of the Department's right to require work in strict conformity with the Contract Documents as a condition of final acceptance.

5.4 AUTHORITY OF CONSULTANT(S). The Department may engage Consultant(s) for limited or full observation to supplement the inspections performed by the Department and respective Counties. Unless otherwise specified in writing to the Contractor, such retained Consultant(s) will have the authority of an Inspector.

5.5 SHOP DRAWINGS AND OTHER SUBMITTALS. The following documents shall be submitted where required by the Contract Documents:

5.5.1 SHOP DRAWING

(a) The Contractor shall prepare, thoroughly check, and approve all shop drawings, including those prepared by subcontractors or any other persons. The Contractor shall indicate its approval by stamping and signing each drawing. Any shop drawing submitted without being reviewed, stamped and signed will be considered as not having been submitted, and any delay caused thereby shall be the Contractor's responsibility.

(b) Shop drawings shall indicate in detail all parts of an item of work, including erection and setting instructions and engagements with work of other trades or other separate contractors. Shop drawings for structural steel, millwork and pre-cast concrete shall consist of calculations, fabrication details, erection drawings and other working drawings to show the details, dimensions, sizes of members, anchor bolt plans, insert locations and other information for the complete fabrication and erection of the structure to be constructed.

(c) The Contractor shall be responsible for the design of all structural curtain walls, all connections and fasteners for structural steel and architectural and structural precast concrete. Curtain walls, connections and fasteners shall be designed by a licensed professional engineer to carry the indicated or necessary loads. The precast concrete pieces shall be designed to withstand erection, transportation and final loading stresses. All calculations shall be performed by a licensed professional engineer and submitted to the Project Manager for review.

(d) The cost of shop drawings or any other submittal shall not be a separate or individual pay item. All costs of furnishing shop drawings required by the contract shall be included in the price agreed to be paid for the various contract items of work, and no additional allowances will be made therefor.

(e) All shop drawings as required by the contract, or as determined by the Project Manager to be necessary to illustrate details of the work shall be submitted to the Project Manager with such promptness as to cause no delay in the work or in that of any other Contractor. Delay caused by the failure of the Contractor to submit shop drawings on a timely basis to allow for review, possible resubmittal and acceptance will not be considered as a justifiable reason for a contract time extension. Contractor, at its own risk, may proceed with the work affected by the shop drawings before receiving acceptance; however the Department shall not be liable for any costs or time required for the correction of work done without the benefit of accepted shop drawings.

(f) It is the Contractor's obligation and responsibility to check all of its and its subcontractor's shop drawings and be fully responsible for them and for coordination with connecting and other related work. The Contractor shall prepare, and submit to the Project Manager coordination drawings showing the installation locations of all plumbing, piping, duct and electrical work including equipment throughout the project. By approving and submitting shop drawings, the Contractor thereby represents that it has determined and verified all field measurements and field construction criteria, or will do so, and that it has checked and coordinated each shop drawing with the requirements of the work and the contract documents. When shop drawings are prepared and processed before field measurements and field construction criteria can be or have been determined or verified, the Contractor shall make all necessary adjustments in the work or resubmit further shop drawings, all at no change in contract price or time.

5.5.1.1 SHOP DRAWING FORM. Each drawing and/or series of drawings submitted must be accompanied by a letter of transmittal giving a list of the titles and number of the drawings. Each series shall be numbered consecutively for ready reference and each drawing shall be marked with the following information:

(a) Date of Submission
(b) Name of Project
(c) Project Number
(d) Location of Project
(e) Name of submitting Contractor and Subcontractor
(f) Revision Number
(g) Specification and/or any drawing reference by article or sheet number.

5.5.1.2 No shop drawing shall be smaller than 24" x 36" nor larger than 28" x 42". At the determination of the Project Manager, each sheet of drawings for the submittal shall consist of either (1) reproducible transparency and three ozalid prints; or (2) six ozalid prints.

5.5.1.3 The Department will not be responsible for any cost of modifying/adjusting precast structures to fit the final as-built design, actual field conditions and finished work. To this end, the Contractor shall follow the following procedures:

(a) Submit shop drawings for general design conformity for approval. Delay precasting operations.

(b) Start infrastructure work. Expose, check grade and install improvements requiring precast structures. Resubmit shop drawings with schedule for all structures indicating required deviations, correct and final inverts, depths, openings, special reinforcing and details, alignments, correct configurations, tops, grating, etc. The Contractor shall submit a schedule for the precasting work. Precast operations may commence based on approved shop drawings. During precast operations, the Project Manager may inspect the operations at least once per differing group of structures. The Contractor shall assume all risks and costs associated with modifying/adjusting the precast structures due to incomplete field verification, premature analysis and shop drawings.

5.5.2 DESCRIPTIVE SHEETS AND OTHER SUBMITTALS. When a submittal is required by the contract, the Contractor shall submit to the Project Manager eight (8) complete sets of descriptive sheets such as brochures, catalogs, illustrations, etc., which will completely describe the material, product, equipment, furniture or appliances to be used in the project as shown in the drawings and specifications. Prior to the submittal, the Contractor will review and check all descriptive sheets for conformity to the contract requirements and indicate such conformity by marking or stamping and signing each sheet. It is the responsibility of the Contractor to submit descriptive sheets for review and acceptance by the Project Manager as required at the earliest possible date after the date of award in order to meet the construction schedule. Delays caused by the failure of the Contractor to submit descriptive sheets as required will not be considered as justifiable reasons for contract time extension. The submittal shall list the seven (7) items of information as listed in Subsection 5.5.1, Shop Drawing.

5.5.3 MATERIAL SAMPLES AND COLOR SAMPLES. Prior to their submittal, all color samples and material shall be assembled and presented as required by the Department. When sample submittals are required by the contract, the Contractor shall review, approve, indicate its approval and submit to the Project Manager samples of the materials to be used in the project and color selection samples. It is the responsibility of the Contractor to submit material and color samples for review as required at the earliest possible date after the date of award in order to meet the construction schedule. Delays caused by the failure of the Contractor to submit material and color samples will not be considered as justifiable reasons for contract time extension. The submittal shall list the seven (7) items of information as listed in Subsection 5.5.1, Shop Drawing.

5.5.4 SUBMITTAL VARIANCES. The Contractor shall include with the submittal, written notification clearly identifying all deviations or variances from the contract drawings, specifications and other Contract Documents. The notice shall be in a written form separate from the submittal. The variances shall also be clearly indicated on the shop drawing, descriptive sheet, material sample or color sample. Failure to so notify of and identify such variances shall be grounds for the subsequent rejection of the related work or materials, notwithstanding that the submittal was accepted by the Project Manager. If the variances are not acceptable to the Project Manager, the Contractor will be

required to furnish the item as specified or indicated on the Contract Documents at no additional cost or time.

5.5.5 REVIEW AND ACCEPTANCE PROCESS. The Project Manager shall check shop drawings and within forty-five (45) days of receipt return them to the Contractor unless otherwise agreed between the Contractor and the Department. Submittals required for work to be installed within the first sixty days after the notice to proceed shall be returned by the Project Manager within twenty (20) days. If the volume of shop drawings submitted at any time for review is unusually large, the Contractor may inform the Project Manager of its preferred order for review and the Project Manager shall use reasonable efforts to accommodate the Contractor's priorities.

5.5.5.1 The acceptance by the Project Manager of the Contractor's submittal relates only to their sufficiency and compliance with the intention of the contract. Acceptance by the Project Manager of the Contractor's submittal does not relieve the Contractor of any responsibility for accuracy of dimensions, details, and proper fit, and for agreement and conformity of submittal with the Contract Drawings and Specifications. Nor will the Project Manager's acceptance relieve the Contractor of responsibility for variance from the Contract Documents unless the Contractor, at the time of submittal, has provided notice and identification of such variances required by this section. Acceptance of a variance shall not justify a contract price or time adjustment unless the Contractor requests such an adjustment at the time of submittal and the adjustment are explicitly agreed to in writing by the Department. Any such request shall include price details and proposed scheduling modifications. Acceptance of a variance is subject to all contract terms, stipulations and covenants, and is without prejudice to any and all rights under the surety bond.

5.5.5.2 If the Project Manager returns a submittal to the Contractor that has been rejected, the Contractor, so as not to delay the work, shall promptly make a resubmittal conforming to the requirements of the Contract Documents and indicating in writing on the transmittal and the subject submittal what portions of the resubmittal has been altered in order to meet the acceptance of the Project Manager. Any other differences between the resubmittal and the prior submittal shall also be specifically described in the transmittal.

5.5.5.3 No mark or notation made by the Project Manager or Consultant(s) on or accompanying the return of any submittal to the Contractor shall be considered a request or order for a change in work. If the Contractor believes any such mark or notation constitutes a request for a change in the work for which it is entitled to an adjustment in contract price and/or time, the Contractor must follow the same procedures established in Section 4.2, CHANGES for oral orders, directions, instructions, interpretations or determinations from the Project Manager or else lose its right to claim for an adjustment.

5.6 COORDINATION OF CONTRACT DOCUMENTS. It is the intent of the Contract Documents to describe a functionally complete Project (or part thereof) to be constructed in accordance with the Contract Documents. The Contract Documents are complementary: any requirement occurring in one document is as binding as though occurring in all. In the event of conflict or discrepancy the priorities stated in the following Subsections shall govern:

5.6.1 Addenda shall govern over all other Contract Documents. Subsequent addenda issued shall govern over prior addenda only to the extent specified.

5.6.2 Special Conditions and Proposal shall govern over the General Conditions and Specifications.

5.6.3 Specifications shall govern over drawings.

5.6.4 Specification Error - Should an error or conflict appear within the specification, the Contractor shall immediately notify the Project Manager. The Project Manager shall promptly issue instructions as to procedure. Any requirement occurring in one or more parts of the specification is as binding as though occurring in all applicable parts.

5.6.4.1 Should an error or conflict appear within a specification section, between a listed manufacturer / product and the performance requirements of the specification section, the performance requirements shall govern.

5.6.4.2: In the event of a conflict between AG-008 103D General Conditions (the "General Conditions") and these DHHL Construction General Conditions, the requirements of these DHHL Construction General Conditions will apply to the extent provided by and as allowed under law.

5.6.5 DRAWINGS

5.6.5.1 Schedules shall govern over all other notes and drawings.

5.6.5.2 Bottom elevations of footings shown on drawings shall govern over a general note such as: "All footings shall rest on firm, undisturbed soil and extend a minimum of a certain number of feet into natural or finish grade, whichever is lower." In the event the footing must be lowered below the bottom elevation shown, the Contractor shall be entitled to additional payment as provided in Section 4.2, CHANGES. In the event the footing is raised above the bottom elevation shown, the Department shall be entitled to a credit as provided in Section 4.2, CHANGES.

5.6.5.3 When a bottom of pile, drilled shaft, piling or cofferdam is shown as an estimated or approximate elevation, the Contractor shall plan and construct to that elevation or to any deeper elevation required by the plans or the direction by the Project Manager. The Project Manager, at the Project Manager's sole discretion, may order in writing termination of all or part of the work above the estimated or approximate elevation.

5.6.5.4 Except for drawing schedules and bottom elevations as noted above, general notes shall govern over all other portions of the drawings:

5.6.5.5 Larger scale drawings shall govern over smaller scale drawings.

5.6.5.6 Figured or numerical dimensions shall govern over dimensions obtained by scaling. Measurements from the drawings when scaled shall be subject to the approval of the Project Manager.

5.6.5.7 In cases of discrepancies in the figures or drawings, the discrepancies shall be immediately referred to the Project Manager without whose decision said discrepancy shall not be corrected by the Contractor save at its own risk and in the settlement of any complications arising from such adjustment without the knowledge and consent of the Project Manager, the Contractor shall bear all extra expense involved.

5.6.5.8 Items shown on the drawings that are completely void in terms of description, details, quality and / or performance standards in both the Drawings and Specifications to make a price determination shall be considered an omission and the Contractor shall immediately refer same to the Project Manager for a decision.

5.6.5.9 Where there is a conflict between the architectural sheets and the civil or landscaping or electrical sheets, etc., the conflict shall be considered a discrepancy and the Contractor shall immediately refer same to the Project Manager for a decision.

5.6.5.10 Any requirement occurring in one or more of the sheets is as binding as though occurring in all applicable sheets.

5.7 INTERPRETATION OF DRAWINGS AND SPECIFICATIONS. The Contractor shall carefully study and compare the Contract Documents with each other, with field conditions and with the information furnished by the Department and shall at once report to the Project Manager errors, conflicts, ambiguities, inconsistencies or omissions discovered. Should an item not be sufficiently detailed or explained in the Contract Documents, Contractor shall report and request the Project Manager's clarification and interpretation. The Project Manager will issue a final clarification or final interpretation.

5.8 EXAMINATION OF DRAWINGS, SPECIFICATIONS, PROJECT SITE

5.8.1 The Contractor shall examine carefully the Project Site to become familiar with the conditions to be encountered in performing the work and the requirements of the Contact Documents.

5.8.1.1 No extra compensation will be given by reason of the Contractor's misunderstanding or lack of knowledge of the requirements of the work to be accomplished or the conditions to be encountered in performing the project.

5.8.1.2 No extra compensation will be given by reason of the Contractor's misunderstanding or lack of knowledge when the existence of differing site, subsurface or physical conditions could have been reasonably discovered or revealed as a result of any examination, investigation, exploration, test or study of the site and contiguous areas required by the bidding requirements or contract documents to be conducted by or for the Contractor.

5.8.2 When the contract drawings include a log of test borings showing a record of the data obtained by the Department's investigation of subsurface conditions, said log represents only the opinion of the Department as to the character of material encountered in its test borings and at only the location of each boring. The Contractor acknowledges that underground site conditions in Hawaii vary widely. There is no warranty, either expressed or implied, that the conditions indicated are representative of those existing throughout the work or any part of it, or that other conditions may not occur.

5.8.3 Reference is made to the Special Conditions for identification of subsurface investigations, reports, explorations and tests utilized by the Department in preparation the Contract Documents. Such reports, drawings, boring logs etc., if any, are not part of the Contract Documents.

5.9 COOPERATION BETWEEN THE CONTRACTOR AND THE DEPARTMENT

5.9.1 FURNISHING DRAWINGS AND SPECIFICATIONS. Contractor will be supplied copies of the Contract Drawings and Specifications as specified in the Special Conditions. Contractor shall have and maintain at least one unmarked copy of the Contract Drawings and Specifications on the work site, at all times. Contractor shall cooperate with the Project Manager, the Inspector(s), and other contractors in every possible way.

5.9.2 SUPERINTENDENT. The Contractor shall have a competent superintendent on the work site as its designated agent. The superintendent shall be able to read and understand the project plans and

specifications and shall be experienced in the type of project being undertaken and the work being performed. The superintendent shall receive instructions from the Project Manager or its authorized representative. The Contractor shall authorize the superintendent to (a) execute the orders and directions of the Project Manager or its authorized representative without delay and (b) promptly supply such materials, equipment, tools, labor and incidentals as may be required to complete the project within the prescribed contract time. The Contractor shall furnish a superintendent regardless of the amount of project work sublet.

5.9.2.1 If the superintendent or agent is not present at the work site, the Project Manager shall have the right to suspend the work as described under Section 7.24, SUSPENSION OF WORK.

5.9.2.2 The Contractor shall file with the Project Manager a written statement giving the name of the superintendent or agent assigned to the project. The Contractor shall be responsible for notifying the Project Manager in writing of any change in the superintendent or agent.

5.9.2.3 The requirements of this Subsection 5.9.2, SUPERINTENDENT may be waived by the Project Manager.

5.9.3 ENGINEERING WORK. The Contractor shall properly and accurately lay out the work, perform all engineering work, and furnish all engineering materials and equipment required to establish and maintain all lines, grades, dimensions and elevations called for in the drawings or required in the progress of construction, unless otherwise noted in the contract documents. The Contractor will be held definitely and absolutely responsible for any errors in lines, grades, dimensions and elevations and shall at once, on instruction from the Project Manager, correct and make good such errors or any errors, or faults in the work resulting from errors in engineering performed under the requirements of its contract to the entire satisfaction of the Project Manager. Full compensation for the work shall be included in the prices paid for contract items of work. No additional allowance will be made for the correction of incorrect engineering work.

5.9.3.1 The Project Manager shall furnish the requisite bench elevations.

5.9.3.2 The Contractor shall locate and verify all lines, grades, dimensions and elevations indicated on the drawings before any excavation, or construction begins. Any discrepancy shall be immediately brought to the attention of the Project Manager; any change shall be made in accordance with the Project Manager's instruction.

5.9.3.3 The Contractor shall verify all street survey monuments (horizontal and vertical alignment) prior to final acceptance by the Project Manager in accordance with any governmental requirements.

5.9.3.4 The Contractor shall provide a surveyor or Civil Engineer licensed in the State of Hawaii to verify and establish all lines, grades, dimensions and elevations.

5.9.4 USE OF STRUCTURE OR IMPROVEMENT. The Department shall have the right, at any time during construction of the structure or improvements, to enter same for the purpose of installing by government labor or by any other Contractor or utility any necessary work in connection with the installation of facilities, it being mutually understood and agreed, however, that the Contractors, utilities and the Department will, so far as possible work to the mutual advantage of all, where their several works in the above mentioned or in unforeseen instances touch upon or interfere with each other. As a convenience to those involved, the Project Manager shall allocate the work and designate the sequence of construction in case of controversy between Contractors on separate projects under Department jurisdiction.

5.9.4.1 The Department shall also have the right to use the structure, equipment, improvement or any part thereof, at any time after it is considered by the Project Manager as available. In the event that the structure, equipment or any part thereof is so used, the Department shall be responsible for all expenses incidental to such use and any damages resulting from the Department's use.

5.9.4.2 Equipment warranty will commence to run before the work is complete when and if the Department begins actual use of the equipment for the purpose for which the equipment was designed and installed.

5.9.4.3 If the Department enters the structure for construction and/or occupancy and the Contractor is delayed because of interference by the Department or by extra work resulting from damage which the Contractor is not responsible for, or by extraordinary measures the Contractor must take to accommodate the Department, the Contractor shall be granted an extension of time in accordance with Section 7.21, CONTRACT TIME. However, if such use increases the cost or delays the completion of the remaining portions of work, the Contractor shall be entitled to such extra compensation or extension of time or both, as the Department may determine to be proper. Any additional work necessary will be paid in accordance with Section 8.3, PAYMENT FOR ADDITIONAL WORK.

5.10 INSPECTION. The Project Manager, the Department's consultants, inspectors employed by the Department and other representatives duly authorized by the Department shall at all times have access to the work during its construction and shall be furnished with every reasonable facility for ascertaining at any time that the materials and the workmanship are in accordance with the requirements and intentions of the contract. All work done and all materials furnished shall be subject to inspection and acceptance.

5.10.1 Such inspection and approval may extend to all or part of the work, and to the preparation, fabrication or manufacture of the materials to be used. By entering into a contract for the supply of materials, equipment or performance of labor in connection with the work, such material and equipment supplier or labor contractor consents to and is subject to the terms of Section 5.9, COOPERATION BETWEEN THE CONTRACTOR AND THE DEPARTMENT to the same extent as the Contractor.

5.10.2 AUTHORITY TO SUSPEND OPERATIONS. The Project Manager shall have the authority to suspend operations of any work being improperly performed by issuing a written order giving the reason for shutting down the work. Should the Contractor disregard such written order, the work done thereafter will not be accepted nor paid for.

5.10.3 The inspection of the work shall not relieve the Contractor of any of its obligations to fulfill the contract as prescribed. Notwithstanding prior payment and acceptance by the Project Manager, any defective and nonconforming work shall be corrected to comply with the contract requirements. Unsuitable, unspecified or unapproved materials may be rejected.

5.10.4 FEDERAL AGENCY INSPECTION. Projects financed in whole or in part with Federal funds shall be subject to inspection and corrective requirements at all times by the Federal Agency involved at no cost to the Department.

5.11 REMOVAL OF DEFECTIVE, NON-CONFORMING AND UNAUTHORIZED WORK

5.11.1 All work which has been rejected as not conforming to the requirements of the Contract shall be remedied or removed and replaced by the Contractor in an acceptable manner and no compensation

will be allowed for such removal or replacement. Any work done beyond the work limits shown on the drawings and specifications or established by the Project Manager or any additional work done without written authority will be considered as unauthorized and will not be paid for. work so done may be ordered removed at the Contractor's expense.

5.11.2 SCHEDULING CORRECTIVE WORK. The Contractor shall perform its corrective or remedial work at the convenience of the Department and shall obtain the Project Manager's approval of its schedule.

5.11.3 FAILURE TO CORRECT WORK. Upon failure on the part of the Contractor to comply promptly with any order of the Project Manager made under the provisions of Section 5.10, the Project Manager shall have authority to cause defective work to be remedied or removed and replaced, and unauthorized work to be removed, at the Contractor's expense, and to deduct the costs from any monies due or to become due the Contractor.

5.12 VALUE ENGINEERING INCENTIVE (§3-132 HAR amended by Act 149 SLH 1999). On projects with contract amounts in excess of $250,000 (two hundred fifty thousand dollars), the following Value Engineering Incentive Clause shall apply to allow the Contractor to share in cost savings that ensue from cost reduction proposals it submits.

5.12.1 The Value Engineering Incentive Clause applies to all Value Engineering Change Proposals (cost reduction proposals, hereinafter referred to as (VECP) initiated and developed by the Contractor for changing the drawings, designs, specifications or other requirements of this contract. This clause does not however, apply to any VECP unless it is identified as such by the Contractor at the time of its submission to the Project Manager.

5.12.2 VALUE ENGINEERING CHANGE PROPOSAL (VECP). All VECP must:

5.12.2.1 Result in a savings to the Department of at least $4000 (four thousand dollars) by providing less costly items and without impairing any essential functions and characteristics such as service life, reliability, economy of operation, ease of maintenance and all necessary features of the completed work;

5.12.2.2 Require, in order to be applied to this Contract, a change order to this Contract; and

5.12.2.3 Not adversely impact on the schedule of performance or the Contract completion date.

5.12.3 VECP REQUIRED INFORMATION. The VECP will be processed expeditiously and in the same manner as prescribed for any other change order proposal. As a minimum, the following information will be submitted by the Contractor with each proposal:

5.12.3.1 A description of the difference between the existing contract requirements and the VECP, and the comparative advantages and disadvantages of each including durability, service life, reliability, economy of operation, ease of maintenance, design safety standards, desired appearance, impacts due to construction and other essential or desirable functions and characteristics as appropriate;

5.12.3.2 An itemization of the requirements of the contract which must be changed if the VECP is adopted and a recommendation as to how to make each such change;

5.12.3.3 An estimate of the reduction in performance costs that will result from adoption of the VECP taking into account the costs of implementation by the Contractor, including any amounts attributable to subcontracts, and the basis for the estimate;

5.12.3.4 A prediction of any effects the VECP would have on other costs to the Department, such as Department furnished property costs, costs of related items, and costs of maintenance and operation over the anticipated life of the material, equipment, or facilities as appropriate; the construction schedule, sequence and time; and bid item totals used for evaluation and payment purposes;

5.12.3.5 A statement of the time by which a change order adopting the VECP must be issued so as to obtain the maximum cost reduction during the remainder of this contract noting any effect on the contract time; and 5.12.3.6 The dates of any previous submissions of the VECP, the numbers of any Government contracts under which submitted and the previous actions by the Government, if known.

5.12.4 REQUIRED USE OF LICENSED ARCHITECT OR ENGINEER. When, in the judgment of the Project Manager, a VECP alters the design prepared by a registered professional architect or engineer, the Contractor shall ensure the changes to be prepared are by or under the supervision of a licensed professional architect or engineer, and stamped and so certified.

5.12.5 Unless and until a change order applies a VECP to a contract, the Contractor shall remain obligated to perform in accordance with the terms of the contract and the Department shall not be liable for delays incurred by the Contractor resulting from the time required for the Department's determination of the acceptability of the VECP.

5.12.5.1 The determination of the Project Manager as to the acceptance of any VECP under a contract shall be final.

5.12.6 ACCEPTANCE OF VECP. The Project Manager may accept in whole or in part any VECP submitted pursuant to this section by issuing a change order to the Contract. Prior to issuance of the change order, the Contractor shall submit complete final contract documents similar to those of the original Contract showing the accepted changes and the new design and features as well as the following:

5.12.6.1 Design calculations;

5.12.6.2 The design criteria used; and

5.12.6.3 A detailed breakdown of costs and expenses to construct or implement such revisions.

5.12.6.4 The change order will identify the final VECP on which it is based.

5.12.7 VECP PRICE ADJUSTMENTS. When a VECP is accepted under a contract, an adjustment in the contract price shall be made in accordance with Section 4.4, PRICE ADJUSTMENT. The adjustment shall first be established by determining the effect on the Contractor's cost of implementing the change, including any amount attributable to subcontractors and to the Department's charges to the Contractor for architectural, engineering, or other consultant services, and the staff time required to examine and review the proposal. The contract price shall then be reduced by fifty percent (50%) of the net estimated decrease in the cost of performance.

5.12.8 The Contractor may restrict the Department's right to use the data or information or both, on any sheet of a VECP or of the supporting data, submitted pursuant to this Subsection, if it is stated on that sheet as follows:

5.12.8.1 "This data or information or both shall not be disclosed outside the Department or be duplicated, used, or disclosed, in whole or in part, for any purpose other than to evaluate this VECP. This restriction shall not limit the Department's right to use this data or information or both if obtained from another source, or is otherwise available, without limitations. If this VECP is accepted by the Department by issuance of a change order after the use of this data or information or both in such an evaluation, the Department shall have the right to duplicate, use and disclose any data or information or both pertinent to the proposal as accepted in any manner and for any purpose whatsoever and have others so do."

5.12.9 In the event of acceptance of a VECP, the Department shall have all rights to use, duplicate or disclose in whole or in part in any manner and for any purpose whatsoever, and to have or permit others to do so, any data or information or both reasonably necessary to fully utilize such proposal.

5.12.10 The Contractor shall submit with each VECP all required information and provide all additional information as may be required by the Project Manager to evaluate and implement the VECP. The cost for preparing the VECP shall be the Contractor's responsibility, and any part of the Contractor's cost for implementing the change shall be due only when the proposal is accepted and a change order is issued.

5.12.11 If the service of the Department's architect, Project Manager or consultant is necessary to review and evaluate a VECP, the cost therefor shall be paid for by the Contractor.

5.12.12 Each VECP shall be evaluated as applicable to this contract, and past acceptance on another Department project for a similar item shall not be automatic grounds for approval.

5.12.13 The method by which the Contractor will share a portion of the cost savings from an accepted VECP shall be for this contract only, and no consideration shall be made for future acquisition, royalty type payment or collateral savings.

5.12.13.1 The Department may accept the proposed VECP in whole or in part. The Chairman shall issue a contract change order to identify and describe the accepted VECP.

5.13 SUBCONTRACTS. Nothing contained in the contract documents shall create a contractual relationship between the Department and any subcontractor.

5.13.1 SUBSTITUTING SUBCONTRACTORS. Contractors may enter into subcontracts only with subcontractors listed in the proposal. No subcontractor may be added or deleted and substitutions will be allowed only if the subcontractor:

5.13.1.1 Fails, refuses or is unable to enter into a subcontract; or

5.13.1.2 Becomes insolvent; or

5.13.1.3 Has its subcontractor's license suspended or revoked; or

5.13.1.4 Has defaulted or has otherwise breached the subcontract in connection with the subcontracted work; or

5.13.1.5 Is unable to comply with other requirements of law applicable to contractors, subcontractors and public works projects.

5.13.2 Requesting Approval to Substitute a Subcontractor. Requests to substitute a subcontractor shall be submitted to the Project Manager for approval. Contractor agrees to hold the Department harmless and indemnify the Department for all claims, liabilities, or damages whatsoever, including attorney's fees arising out of or related to the approval or disapproval of the substitution.

5.13.3 The Contractor shall cause appropriate provisions to be inserted in all subcontracts relative to the work to bind subcontractors to the Contractor by the terms of the General Conditions and the other contract documents insofar as applicable to the work of the subcontractor and to give the Contractor the same rights regarding the termination of a subcontractor as the Department may exercise over the Contractor.

5.13.4 The Contractor shall not sponsor any unliquidated subcontractor's claim against the Department and shall defend, indemnify and hold the Department harmless against any direct claims by its subcontractors. Any claim for additional compensation by a subcontractor in connection with the work shall be made only against the Contractor. The Contractor may not assert any such claim against the Department until the liability of the Contractor has been unconditionally established by negotiation, arbitration or litigation, and the amount due the subcontractor has been determined, save for interest due.

5.13.5 Once a subcontractor's claim is established, should the Contractor intend to make the claim against the Department, it shall follow the procedure set forth under Section 7.25, DISPUTES AND CLAIMS.

5.13.6 SUBCONTRACTING. Contractor shall perform with its own organization, work amounting to not less than twenty percent (20%) of the total contract cost, exclusive of costs for materials and equipment the Contractor purchases for installation by its subcontractors, except that any items designated by the Department in the contract as "specialty items" may be performed by a subcontractor and the cost of any such specialty items so performed by the subcontractor may be deducted from the total contract cost before computing the amount of work required to be performed by the Contractor with its own organization. For the purposes of this section, the Contractor's work is defined as: direct cost labor for contractor's forces; direct cost materials installed by the contractor's direct cost labor force; direct cost equipment, either owned or leased, used by the contractor's direct cost labor force; and field overhead cost to include: field supervision, field office trailer (if any), field office equipment and supplies, etc.

~END OF ARTICLE 5~

ARTICLE 6: CONTROL OF MATERIALS AND EQUIPMENT

6.1 MATERIALS AND EQUIPMENT. Contractor shall furnish, pay for and install all material and equipment as called for in the drawings and specifications. Materials and equipment shall be new and the most suitable for the purpose intended unless otherwise specified. The Department does not guarantee that the specified or pre-qualified product listed in the drawings and specifications are available at the time of bid or during the contract period.

6.2 SOURCE OF SUPPLY AND QUALITY OF MATERIALS

6.2.1 Only materials conforming to the drawings and specifications and, when required by the contract have been accepted by the Project Manager, shall be used. In order to expedite the inspection and testing of materials, at the request of the Project Manager, the Contractor shall identify its proposed sources of materials within ten (10) days after notification by the Project Manager.

6.2.2 At the option of the Project Manager, the materials may be accepted by the Project Manager at the source of supply before delivery is started. Representative preliminary samples of the character and quantity prescribed shall be submitted by the Contractor or producer for examination and tested in accordance with the methods referred to under samples and tests.

6.2.3 PROJECT MANAGER'S AUTHORIZATION TO TEST MATERIALS. Materials proposed to be used may be inspected and tested whenever the Project Manager deems necessary to determine conformance to the specified requirements. The cost of testing shall be borne by the Contractor. However, should test results show that the material(s) is in compliance with the specified requirements; the cost of the testing will be borne by the Department.

6.2.4 UNACCEPTABLE MATERIALS. In the event material(s) are found to be unacceptable, the Contractor shall cease their use, remove the unacceptable material(s) that have already been installed or applied, and furnish acceptable materials all at no additional cost to the Department. No material which is in any way unfit for use shall be used.

6.3 SUBSTITUTION OF MATERIALS AND EQUIPMENT

6.3.1 SUBSTITUTION OF MATERIALS AND EQUIPMENT BEFORE BID OPENING For materials and equipment submitted in compliance with Instructions to Bidders, if after installing the substituted product, an unlisted variance is discovered the Contractor shall immediately replace the product with a specified product at no cost to the Department.

6.3.2 SUBSTITUTION AFTER CONTRACT AWARD. Subject to the Project Manager's determination if the material or equipment is equal to the one specified or prequalified, substitution of material or equipment may be allowed after the Letter of Award is issued only:

6.3.2.1 If the specified or prequalified item is delayed by unforeseeable contingencies beyond the control of the Contractor which would cause a delay in the project completion; or

6.3.2.2 If any specified or prequalified item is found to be unusable or unavailable due to a change by the manufacturer or other circumstances; or

6.3.2.3 If the Contractor desires to provide a more recently developed material, equipment, or manufactured model from the same named manufacturer than the one specified or prequalified; or

6.3.2.4 If the specified material and / or equipment inadvertently lists only a single manufacturer.

6.3.3 A substitution request after the Contract is awarded shall be fully explained in writing. Contractor shall provide brochures showing that the substitute material and / or equipment is equal or better in essential features and also provide a matrix showing comparison of the essential features. Contractor shall justify its request and include quantities and unit prices involved, respective supplier's price quotations and such other documents necessary to fully support the request. Any savings in cost will be credited to the Department. Contractor shall absorb any additional cost for the substitute item(s) or for its installation. Submitting a substitution request, does not imply that substitutions, for brand name specified materials and equipment will be allowed. The Project Manager may reject and deny any request deemed irregular or not in the best interest of the Department. A request for substitution shall not in any way be grounds for an extension of contract time. At the discretion of the Project Manager, a time extension may be granted for an approved substitution.

6.4 ASBESTOS CONTAINING MATERIALS. The use of materials or equipment containing asbestos is prohibited under this contract. Contractor warrants that all materials and equipment incorporated in the project are asbestos-free.

6.5 TEST SAMPLES

6.5.1 The Project Manager may require any or all materials to be tested by means of samples or otherwise. Contractor shall collect and forward samples requested by the Project Manager. Contractor shall not use or incorporate any material represented by the samples until all required tests have been made and the material has been accepted. In all cases, the Contractor shall furnish the required samples without charge. Where samples are required from the completed work, the Contractor shall cut and furnish samples from the completed work. Samples so removed shall be replaced with identical material and refinished. No additional compensation will be allowed for furnishing test samples and their replacement with new materials.

6.5.2 Tests of the material samples will be made in accordance with the latest standards of the American Society for Testing and Materials (ASTM), as amended prior to the contract date unless otherwise provided. In cases where a particular test method is necessary or specifications and serial numbers are stipulated, the test shall be made by the method stated in the above-mentioned publication. Where the test reference is the American Association of State Highway and Transportation Officials (AASHTO), it means the specifications and serial numbers of the latest edition and amendments prior to the bid date.

6.5.3 The Project Manager may, at no extra cost to the Department retest any materials which have been tested and accepted at the source of supply after the same has been delivered to the work site. The Project Manager shall reject all materials which, when retested, do not meet the requirements of the Contract.

6.6 MATERIAL SAMPLES

6.6.1 The Contractor shall furnish all samples required by the drawings and specifications or that may be requested by the Project Manager of any and all materials or equipment it proposes to use. Unless specifically required, samples are not to be submitted with the bid.

6.6.2 No materials or equipment of which samples are required shall be used on the work until the Project Manager has received and accepted the samples. If the Contractor proceeds to use such materials before the Project Manager accepts the samples, the Contractor shall bear the risk.

6.6.3 Contractor shall furnish two (2) copies of a transmittal letter with each shipment of samples. The letter shall provide a list of the samples, the name of the building or work for which the materials are intended and the brands of the materials and names of the manufacturers. Also, each sample submitted shall have a label indicating the material represented, its place of origin, the names of the producer, the Contractor and the building or work for which the material is intended. Samples of finished materials shall be marked to indicate where the materials represented are required by the drawings or specifications.

6.6.4 Acceptance of any sample(s) shall be only for the characteristics or for the uses named in such acceptance and for no other purpose. Acceptance of samples shall not change or modify any contract requirement. All samples will be provided by the Contractor at no extra cost to the Department. See also Section 5.5, SHOP DRAWINGS AND OTHER SUBMITTALS.

6.7 NON-CONFORMING MATERIALS. All materials not conforming to the requirements of this contract documents, whether in place or not, shall be rejected and removed immediately from the site of work unless otherwise permitted by the Project Manager in writing. No rejected material which has subsequently been made to conform shall be used unless and until written acceptance has been given by the Project Manager. If the Contractor fails to comply forthwith with any order of the Project Manager made under the provisions of this Section 6.7, NON-CONFORMING MATERIALS the Project Manager shall have the authority to remove and replace non-conforming materials and charge the cost of removal and replacement to the Contractor.

6.8 HANDLING MATERIALS. Contractor shall handle all materials to preserve their quality and fitness for work. Transport aggregates from the source or storage site to the work in tight vehicles to prevent loss or segregation of materials after loading and measuring.

6.9 STORAGE OF MATERIALS. Contractor shall store all materials to preserve their quality and fitness for the work. Unless otherwise provided, any portion of the project site within the Project Contract Limit not required for public travel may be used for storage purposes and for the Contractor's plant and equipment. Any additional space required shall be provided by the Contractor at its expense subject to the Project Manager's acceptance. Contractor shall store materials on wooden platforms or other hard, clean surfaces and covered to protect it from the weather and damage. Stored materials shall be located to allow prompt inspection.

6.10 PROPERTY RIGHTS IN MATERIALS. Nothing in the contract shall be construed to vest in the Contractor any right to any materials and equipment after such materials and equipment have been attached, affixed to, or placed in the work.

6.11 ANTITRUST CLAIMS. The STATE and the CONTRACTOR recognized that in actual economic practice, overcharges resulting from antitrust violations are in fact usually borne by the purchaser. Therefore, the CONTRACTOR hereby assigns to STATE any and all claims for overcharges as to goods and material purchased in connection with this Contract, except as to overcharges which result from violations commencing after the price is established under this Contract and which are not passed on to the STATE under an escalation clause.

~END OF SECTION 6~

ARTICLE 7: PROSECUTION AND PROGRESS (Including Legal Relations and Responsibility)

7.1 PROSECUTION OF THE WORK

7.1.1 After approval of the Contract by the Chairman, a Notice to Proceed will be given to the Contractor as described in Section 3.10, NOTICE TO PROCEED. The Notice to Proceed will indicate the date the Contractor is expected to begin the construction and from which date contract time will be charged.

7.1.2 The Contractor shall begin work no later than ten (10) working days from the date in the Notice to Proceed and shall diligently prosecute the same to completion within the contract time allowed. The Contractor shall notify the Project Manager at least three (3) working days before beginning work.

7.1.3 If any subsequent suspension and resumption of work occurs, the Contractor shall notify the Project Manager at least twenty-four (24) hours before stopping or restarting actual field operations.

7.1.4 WORKING PRIOR TO NOTICE TO PROCEED. The Contractor shall not begin work before the date in the Notice to Proceed. Should the Contractor begin work before receiving the Notice to Proceed, any work performed in advance of the specified date will be considered as having been done at the Contractor's risk and as a volunteer and subject to the following conditions:

7.1.4.1 Under no circumstances shall the Contractor commence work on site until it has notified the Project Manager of its intentions and has been advised by the Project Manager in writing that the project site is available to the Contractor. The project site will not be made available until the Contractor has complied with commencement requirements under Section 7.2, COMMENCEMENT REQUIREMENTS.

7.1.4.2 In the event the contract is not executed, the Contractor shall, at its own expense, do such work as is necessary to leave the site in a neat condition to the satisfaction of the Project Manager. The Contractor shall not be reimbursed for any work performed.

7.1.4.3 All work done prior to the Notice to Proceed shall be performed in accordance with the Contract Documents, but will only be considered authorized work and be paid for as provided in the Contract after the Notice to Proceed is issued.

7.1.5 For repairs and/or renovations of existing buildings, unless otherwise permitted by the Project Manager, the Contractor shall not commence with the physical construction unless all or sufficient amount of materials are available for either continuous construction or completion of a specified portion of the work. When construction is started, the Contractor shall work expeditiously and pursue the work diligently until it is complete. If only a portion of the work is to be done in stages, the Contractor shall leave the area safe and usable for the user agency at the end of each stage.

7.2 COMMENCEMENT REQUIREMENTS. Prior to beginning work on site, the Contractor shall submit the following to the Project Manager:

7.2.1 Identification of the Superintendent or authorized representative on the job site. Refer to Section 5.9, COOPERATION BETWEEN THE CONTRACTOR AND THE DEPARTMENT;

7.2.1.1 Identification of the surveyor who shall be licensed in the State of Hawaii and will work for it throughout the course of the project. Refer to Section 5.9.3.4.

7.2.2 Proposed Working Hours on the job. Refer to Section 7.5, NORMAL WORKING HOURS;

7.2.3 Permits and Licenses. Refer to Section 7.4, PERMITS AND LICENSES;

7.2.4 Schedule of Prices to be accepted for the agreed Monthly Payment Application. Unless the proposal provides unit price bids on all items in this project, the successful Bidder will be required, after the award of contract, to submit a schedule of prices for the various items of construction included in the contract. For projects involving more than a single building and / or facility, the breakdown cost shall reflect a separate schedule of prices for the various items of work for each building and/or facility. The sum of the prices submitted for the various items must equal the lump sum bid in the Bidder's proposal. This schedule will be subject to acceptance by the Project Manager who may reject same and require the Bidder to submit another or several other schedules if in the Project Manager's opinion the prices are unbalanced or not sufficiently detailed. This schedule of prices shall be used for the purpose of determining the value of monthly payments due the Contractor for work installed complete in place; and may be used as the basis for determining cost and credit of added or deleted items of work, respectively;

7.2.4.1 The Contractor shall estimate at the close of each month the percentage of work completed under each of the various construction items during such month and submit the Monthly Payment Application to the Project Manager for review and approval. The Contractor shall be paid the approved percentage of the price established for each item less the retention provided in Section 8.4, PROGRESS AND/OR PARTIAL PAYMENTS; and

7.2.5 PROOF OF INSURANCE COVERAGE. Certificate of Insurance or other documentary evidence satisfactory to the Project Manager that the Contractor has in place all insurance coverage required by the contract. Refer to Section 7.3, INSURANCE REQUIREMENTS.

7.2.6 Until such time as the above items are processed and approved, the Contractor shall not be allowed to commence on any operations unless authorized by the Project Manager.

7.3 INSURANCE REQUIREMENTS

7.3.1 OBLIGATION OF CONTRACTOR. Contractor shall not commence any work until it obtains, at its own expense, all required herein insurance. Such insurance shall be provided by an insurance company authorized by the laws of the State to issue such insurance in the State of Hawaii. Coverage by a “Non-Admitted” carrier is permissible provided the carrier has a Best’s Rating of “A-VII” or better.

7.3.2 All insurance described herein will be maintained by the Contractor for the full period of the contract and in no event will be terminated or otherwise allowed to lapse prior to written certification of final acceptance of the work by the Department.

7.3.3 Certificate(s) of Insurance acceptable to the Department shall be filed with the Project Manager prior to commencement of the work. Certificates shall identify if the insurance company is a “captive” insurance company or a “Non-Admitted” carrier to the State of Hawaii. The Best’s rating must be stated for the “Non-Admitted” carrier. Certificates shall contain a provision that coverage(s) being certified will not be cancelled or materially changed without giving the Project Manager at least thirty (30) days prior written notice. The Department is to be named as Additional Insured on any of the required insurance and it shall be so noted on the certificate. Should any policy be cancelled before final acceptance of the work by the Department, and the Contractor fails to immediately procure replacement insurance as specified, the Department, in addition to all other remedies it may have for

such breach, reserves the right to procure such insurance and deduct the cost thereof from any money due to the Contractor.

7.3.4 Nothing contained in these insurance requirements is to be construed as limiting the extent of Contractor's responsibility for payment of damages resulting from its operations under this Contract, including the Contractor's obligation to pay liquidated damages, nor shall it affect the Contractor's separate and independent duty to defend, indemnify and hold the Department harmless pursuant to other provisions of this Contract. In no instance will the Department's exercise of an option to occupy and use completed portions of the work relieve the Contractor of its obligation to maintain the required insurance until the date of final acceptance of the work.

7.3.5 All insurance described herein shall be primary and cover the insured for all work to be performed under the Contract, all work performed incidental thereto or directly or indirectly connected therewith, including traffic detour work or other work performed outside the work area and all change order work.

7.3.6 The Contractor shall, from time to time, furnish the Project Manager, when requested, satisfactory proof of coverage of each type of insurance required covering the work. Failure to comply with the Project Manager's request may result in suspension of the work, and shall be sufficient grounds to withhold future payments due the Contractor and to terminate the contract for Contractor's default.

7.3.7 TYPES OF INSURANCE. Contractor shall purchase and maintain insurance described below which shall provide coverage against claims arising out of the Contractor's operations under the Contract, whether such operations be by the Contractor itself or by any subcontractor or by anyone directly or indirectly employed by any of them or by anyone for whose acts any of them may be liable.

7.3.7.1 WORKER'S COMPENSATION. The Contractor shall obtain worker's compensation insurance for all persons whom they employ in carrying out the work under this contract. This insurance shall be in strict conformity with the requirements of the most current and applicable State of Hawaii Worker's Compensation Insurance laws in effect on the date of the execution of this contract and as modified during the duration of the contract.

7.3.7.2 COMMERCIAL GENERAL LIABILITY INSURANCE AND AUTOMOBILE INSURANCE. Contractor's commercial general liability insurance and automobile liability insurance shall both be obtained in a combined, single limit of not less than $1,000,000 (one million dollars) unless otherwise indicated in the Special Conditions per occurrence that shall include coverage for bodily injury, sickness, disease or death of any person, arising directly or indirectly out of, in connection with, the performance of work under this contract.

7.3.7.3 "General Liability and Automobile Insurance. CONTRACTOR shall maintain, at its own expense, the minimum insurance coverage specified below, or as amended in the Special Conditions, throughout the term of this Contact.

a. General Liability insurance providing coverage of no less than ONE MILLION DOLLARS ($1,000,000.00) per occurrence and TWO MILLION DOLLARS ($2,000,000.00) in the aggregate.
b. Automobile insurance providing coverage of no less than ONE MILLION DOLLARS ($1,000,000.00) per accident."

7.3.7.4 The Contractor shall either (a) Require each of its subcontractors to procure and to maintain during the life of its subcontract, subcontractor's comprehensive general liability, automobile liability and

property damage liability insurance of the type and in the same amounts specified herein; or (b) Insure the activities of its subcontractors in its own policy.

7.3.7.5 BUILDERS RISK INSURANCE. Unless excluded by the Special Conditions of this contract, the Contractor shall provide builder's risk insurance during the progress of the work and until final acceptance by the Department upon completion of the contract. It shall be "All Risk" (including but not limited to earthquake, windstorm and flood damage) completed value insurance coverage on all completed work and work in progress to the full replacement value thereof. Such insurance shall include the Department as an additional named insured. The Contractor shall submit to the Project Manager for its approval all items deemed to be uninsurable. The policy may provide for a deductible in an amount of up to twenty five percent (25%) of the amount insured by the policy. With respect to all losses up to any deductible amount, the relationship between the Contractor and the Department shall be that of insurer and the additional insured respectively as if no deductible existed. The Contractor is responsible for theft, if any item of the contract is stolen prior to, or after installation, until the work is accepted by the Department. Progress payment does not constitute acceptance.

7.4 PERMITS AND LICENSES

7.4.1 The Department or its representative may process Federal (e.g. Army Corps of Engineers), State and county permit applications. The Contractor shall pick up the preprocessed Permits at the appropriate governmental agency and pay the required fees. Other permits necessary for the proper execution of the work such as utility connection permits, elevator installation permits etc., unless processed by the Department and paid for by the Contractor, shall be obtained and paid for by the Contractor.

7.4.2 Until such time as the above permits are approved, the Contractor shall not be allowed to commence any operations without written approval of the Project Manager.

7.4.3 The Project Manager reserves the right to waive application and processing of the building permit.

7.5 NORMAL WORKING HOURS. Prior to beginning operations, unless otherwise established by the Department, the Contractor shall notify the Project Manager in writing of the time in hours and minutes, A.M. and P.M. respectively, at which it desires to begin and end the day's work. If the Contractor desires to change the working hours, it shall request the Project Manager's approval three (3) consecutive working days prior to the date of the change.

7.6 HOURS OF LABOR (§104-2 HRS)

7.6.1 No laborer or mechanic employed on the job site of any public work of the Department or any political sub-division thereof shall be permitted or required to work on Saturday, Sunday or a legal holiday of the State or in excess of eight (8) hours on any other day unless the laborer or mechanic receives overtime compensation for all hours worked on Saturday, Sunday and a legal holiday of the State or in excess of eight (8) hours on any other day. For the purposes of determining overtime compensation under this Section 7.6, HOURS OF LABOR (§104-2 HRS) the basic hourly rate of any laborer or mechanic shall not be less than the basic hourly rate determined by the Department of Labor and Industrial Relations to be the prevailing basic hourly rate for corresponding classes of laborers and mechanics on projects of similar character in the Department.

7.6.2 Overtime compensation means compensation based on one and one-half times the laborers or mechanics basic hourly rate of pay plus the cost to an employer of furnishing a laborer or mechanic with fringe benefits.

7.7 PREVAILING WAGES (State §104-2 HRS & Federal Davis-Bacon)

7.7.1 The Contractor shall at all time observe and comply with all provisions of Chapter 104, HRS, the significant requirements of which are emphasized in the Department of Labor and Industrial Relations Publication No. H104-3 entitled "Requirements of Chapter 104, Hawaii Revised Statutes, Wages and Hours of Employees on Public Works Law". The Contractor must also comply with all provisions of Federal Davis-Bacon Act (40 U.S.C. 276-276a-5 and Code of Federal Regulation (CFR) Title 29 and related Acts.

7.7.2 WAGE RATE SCHEDULE. The wage rate schedule may not be physically enclosed in the bid documents. However, the wage rate schedule is incorporated herein by reference and made a part of the Bid and Contract Documents. The bidder must obtain and use the latest minimum rates ten (10) days prior to the date set for the bid opening of bids. The wage rate schedule may be obtained from the DHHL, Labor Compliance Specialist, Hale Kalanianaole, 91-5420 Kapolei Parkway, Kapolei, Hawaii, 96707 or, State Department of Labor and Industrial Relations web site:

http://labor.hawaii.gov/rs/home/wages/72-2/

or the Federal Department of Labor (Davis- Bacon) wage rate schedule web site:

http://www.wdol.gov.

7.7.3 The Contractor or its subcontractor(s) shall pay all laborers and mechanics employed on the job site, unconditionally and not less often than once a week, and without deduction or rebate on any account except as allowed by law, the full amounts of their wages including overtime, accrued to not more than five (5) working days prior to the time of payment, at wage rates not less than those stated in the contract, regardless of any contractual relationship which may be alleged to exist between the Contractor and subcontractor and such laborers and mechanics. The wages stated in the contract shall not be less than the minimum prevailing wages (basic hourly rate plus fringe benefits), as determined by the of Labor and Industrial Relations and published in wage rate schedules. Any increase in wage rates, as determined by the of Labor and Industrial Relations and issued in the wage rate schedule, shall be applicable during the performance of the contract, in accordance with Section 104-2(a) and (b), Hawaii Revised Statutes. Notwithstanding the provisions of the original contract, if the of Labor and Industrial Relations determines that prevailing wages have increased during the performance of the contract, the rate of pay of laborers and mechanics shall be raised accordingly.

7.7.4 The applicable wage rate schedule shall be physically included in the Contract Documents executed by the successful Bidder.

7.7.5 POSTING WAGE RATE SCHEDULE. The rates of wages to be paid shall be posted by the Contractor in a prominent and easily accessible place at the job site and a copy of such wages required to be posted shall be given to each laborer and mechanic employed under the contract by the Contractor at the time the person is employed thereunder, provided that where there is a collective bargaining agreement, the Contractor does not have to provide its employees the wage rate schedules. Any revisions to the schedule of wages issued by the Department of Labor and Industrial Relations during the course of the Contract shall also be posted by the Contractor and a copy provided to each laborer and mechanic employed under the Contract as required above.

7.7.6 The Chairman may withhold from the Contractor so much of the accrued payments as the Chairman may consider necessary to pay to laborers and mechanics employed by the Contractor or any

subcontractor on the job site. The accrued payments withheld shall be the difference between the wages required by this Contract and the wages actually received by such laborers or mechanics.

7.8 FAILURE TO PAY REQUIRED WAGES (§104-4, HRS or Federal Davis-Bacon). If the Department finds that any laborer or mechanic employed on the job site by the Contractor or any subcontractor has been or is being paid wages at a rate less than the required rate by the Contract, or has not received their full overtime compensation, the Department may, by written notice to the Contractor, terminate its right, or the right of any subcontractor, to proceed with the work or with the part of the work on which the required wages or overtime compensation have not been paid and may complete such work or part by contract or otherwise, and the Contractor and its sureties shall be liable to the Department for any excess costs occasioned thereby.

7.9 PAYROLLS AND PAYROLL RECORDS (§104-3 HRS)

7.9.1 A certified copy of each weekly payroll shall be submitted to the Chairman within seven (7) calendar days after the end of each weekly payroll period. Failure to do so on a timely basis shall be cause for withholding of payments, termination of the contract, and/or debarment. The Contractor shall be responsible for the timely submission of certified copies of payrolls of all subcontractors. The certification shall affirm that payrolls are correct and complete, that the wage rates contained therein are not less than the applicable rates contained in the wage determination decision, any amendments thereto during the period of the contract, and that the classifications set forth for each laborer and mechanic conform with the work they performed.

7.9.2 Payroll records for all laborers and mechanics working at the site of the work shall be maintained by the General Contractor and its subcontractors, if any, during the course of the work and preserved for a period of four (4) years thereafter. Such records shall contain the name of each employee, their address, their correct classification, rate of pay, daily and weekly number of hours worked, itemized deductions made and actual wages paid. Such records shall be made available for inspection at a place designated by the Chairman, the U.S. Department of Labor and any authorized persons who may also interview employees during working hours on the job site.

7.9.3 Note that the falsification of certifications noted in this Section 7.9, PAYROLLS AND PAYROLL RECORDS (§104-3 HRS) may subject the Contractor or subcontractor to penalties and debarment under the laws referenced in Section 7.14, LAWS TO BE OBSERVED and / or criminal prosecution.

7.10 OVERTIME AND NIGHT WORK

7.10.1 Overtime work shall be considered as work performed in excess of eight (8) hours in any one (1) day or work performed on Saturday, Sunday or legal holiday of the State. Overtime and night work are permissible when approved by the Project Manager in writing, or as called for elsewhere within these Contract Documents.

7.10.2 OVERTIME NOTIFICATION. Contractor shall inform the Project Manager in writing at least two (2) working days in advance as to exactly what specific work is to be done during any overtime and night period to ensure that proper inspection will be available.

7.10.3 In the event that work other than that contained in the above notification is performed and for which the Project Manager determines Department inspection services were necessary but not available because of the lack of notification, the Contractor may be required to remove all such work and perform the work over again in the presence of Department inspection personnel.

7.10.4 Any hours worked in excess of the normal eight (8) working hours per day or on Saturdays, Sundays or legal State holidays will not be considered a working day.

7.10.5 The Department hereby reserves the right to cancel the overtime, night, Saturday, Sunday or legal State holiday work when it is found that work during these periods is detrimental to the public welfare or the user agency.

7.11 OVERTIME AND NIGHT PAYMENT FOR DEPARTMENT INSPECTION SERVICE

7.11.1 Whenever the Contractor's operations require the Department's inspection and staff personnel to work overtime or at night, the Contractor shall reimburse the Department for the cost of such services unless otherwise instructed in the Contract. The Project Manager will notify the Contractor of the minimum number of required Department employees and other personnel engaged by the Department prior to the start of any such work. The costs chargeable to the Contractor shall include but not be limited to the following:

7.11.1.1 The cost of salaries which are determined by the Department and includes overtime and night time differential for the Department's staff and inspection personnel. In addition to the cost of the salaries, the Contractor shall reimburse the Department's share of contributions to the employee's retirement, medical plan, social security, vacation, sick leave, worker's compensation funds, per diem, and other applicable fringe benefits and overhead expenses;

7.11.1.2 The transportation cost incurred by the Department's staff and inspection personnel which are based on established rental rates or mileage allowance in use by the Department for the particular equipment or vehicle; and/or

7.11.1.3 Fees and other costs billed the Department by Consultants engaged on the project for overtime and/or night time work.

7.11.2 PAYMENT FOR INSPECTION SERVICES. The monies due the Department for staff and inspection work and use of vehicles and equipment as determined in Subsection 7.11.1, OVERTIME AND NIGHT PAYMENT FOR DEPARTMENT INSPECTION SERVICE shall be deducted from the monies due or to become due the Contractor. In any and all events, the Contractor shall not pay the Department's employees directly.

7.12 LIMITATIONS OF OPERATIONS

7.12.1 Contractor shall at all times conduct the work in such manner and in such sequence as will ensure the least practicable interference with pedestrian and motor traffic passageways. The Contractor shall furnish convenient detours and provide and plan other appropriate signs, flashers, personnel, warnings, barricades and other devices for handling pedestrian and motor traffic.

7.12.2 In the event that other contractors are also employed on the job site, the Contractor shall arrange its work and dispose of materials so as not to interfere with the operations of the other contractors engaged upon adjacent work. The Contractor shall join its work to that of others and existing buildings in a proper manner, and in accordance with the drawings and specifications, and perform its work in the proper sequence in relation to that of others, all as may be directed by the Project Manager.

7.12.3 Each Contractor shall be responsible for any damage done by it to work performed by another contractor. Each Contractor shall conduct its operations and maintain the work in such condition that no fugitive dust shall be created and adequate drainage shall be in effect at all times.

7.12.4 In the event that the Contractor fails to prosecute its work as provided in this Section 7.12, LIMITATIONS OF OPERATIONS or disregards the directions of the Project Manager, the Project Manager may suspend the work until such time as the Contractor provides for the prosecution of the work with minimum interference to traffic and passageways or other contractors, dust control, adequate drainage, the repair of damage and complies with the direction of the Project Manager. No payment will be made to the Contractor for the costs of such suspension.

7.13 ASSIGNMENT OR CHANGE OF NAME (§3-125-14 HAR)

7.13.1 SUBCONTRACTS AND ASSIGNMENT. The CONTRACTOR shall not assign or subcontract any of the CONTRACTOR's duties, obligations, or interests under this Contract and no such assignment or subcontract shall be effective unless (i) the CONTRACTOR obtains the prior written consent of the STATE and (ii) the CONTRACTOR's assignee or subcontractor submits to the STATE a tax clearance certificate from the of Taxation, State of Hawaii, showing that all delinquent taxes, if any, levied or accrued under state law against the CONTRACTOR's assignee or subcontractor have been paid. Additionally, no assignment by the CONTRACTOR of the CONTRACTOR's right to compensation under this Contract shall be effective unless and until the assignment is approved by the Comptroller of the State of Hawaii, as provided in Section 40-58, HRS.

7.13.2 RECOGNITION OF A SUCCESSOR IN INTEREST. When in the best interest of the State, a successor in interest may be recognized in an assignment Contract in which the STATE, the CONTRACTOR and the assignee or transferee (hereinafter referred to as the "Assignee") agree that:

7.13.2.1 The Assignee assumes all of the CONTRACTOR's obligations;

7.13.2.2 The CONTRACTOR remains liable for all obligations under this Contract but waives all rights under this Contract as against the STATE; and

7.13.2.3 The CONTRACTOR shall continue to furnish, and the Assignee shall also furnish, all required bonds.

7.13.3 CHANGE OF NAME. When the CONTRACTOR asks to change the name in which it holds this Contract with the STATE, the procurement officer of the purchasing agency (hereinafter referred to as the "Agency procurement officer") shall, upon receipt of a document acceptable or satisfactory to the Agency procurement officer indicating change of name (for example, an amendment to the CONTRACTOR's articles of incorporation), enter into an amendment to this Contract with the CONTRACTOR to effect such a change of name. The amendment to this Contract changing the CONTRACTOR's name shall specifically indicate that no other terms and conditions of this Contract are thereby changed.

7.13.4 REPORTS. All assignment Contracts and amendments to this Contract effecting changes of the CONTRACTOR's name or novations hereunder shall be reported to the CPO within thirty days of the date that the assignment Contract or amendment becomes effective.

7.13.5 ACTIONS AFFECTING MORE THAN ONE PURCHASING AGENCY. Notwithstanding the provisions of Subsections 7.13.2 through 7.13.4 herein, when the CONTRACTOR holds Contracts

with more than one purchasing agency of the State, the assignment Contracts and the novation and change of name amendments herein authorized shall be processed only through the CPO's office.

7.14 LAWS TO BE OBSERVED. The CONTRACTOR shall comply with all federal, state, and county laws, ordinances, codes, rules, and regulations, as the same may be amended from time to time, that in any way affect the CONTRACTOR's performance of this Contract.

7.14.1 The Contractor at all times shall observe and comply with all Federal, State and local laws or ordinances, rules and regulations which in any manner affect those engaged or employed in the work, the materials used in the work, and the conduct of the work. The Contractor shall also comply with all such orders and decrees of bodies or tribunals having any jurisdiction or authority over the work. Any reference to such laws, ordinances, rules and regulations shall include any amendments thereto before and after the date of this Contract.

7.14.2 The Contractor shall defend, protect, hold harmless and indemnify the State and its departments and agencies and all their officers, representatives, employees or agents against any claim or liability arising from or based on the violation of any such laws, ordinances, rules and regulations, orders or decrees, whether such violation is committed by the Contractor or its Subcontractor(s) or any employee of either or both. If any discrepancy or inconsistency is discovered in the contract for the work in relation to any such laws, ordinances, rules and regulations, orders or decrees, the Contractor shall forthwith report the same to the Project Manager in writing.

7.14.3 While the Contractor must comply with all applicable laws, attention is directed to: Wage and Hours of Employees on Public Works, Chapter 104, Hawaii Revised Statutes (HRS); Hawaii Public Procurement Code, Authority to debar or suspend, Section 103D-702, HRS; Hawaii Employment Relations Act, Chapter 377, HRS; Hawaii Employment Security Law, Chapter 383, HRS; Worker's Compensation Law, Chapter 386, HRS; Wage and Hour Law, Chapter 387, HRS; Occupational Safety and Health, Chapter 396, HRS; and Authority to Debar or Suspend, Chapter 126, subchapter 2, Hawaii Administrative Rules (HAR).

7.14.4 CONFLICT BETWEEN GENERAL CONDITIONS AND PROCUREMENT RULES. In the event of a conflict between the General Conditions and the Procurement Rules, the Procurement Rules in effect on the date this Contract became effective shall control and are hereby incorporated by reference.

7.15 PATENTED DEVICES, MATERIALS AND PROCESSES. If the Contractor desires to use any design, device, material, or process covered by letters of patent or copyright, the right for such use shall be procured by the Contractor from the patentee or owner. The Contractor shall defend, protect, indemnify and hold harmless the State of Hawaii, the contracting agency, and their officers, employees, and agents from and against all liability, loss, damage, cost, and expense, including attorney' fees, and all claims, suits, and demands arising out of or resulting from any claims, demands, or actions by the patent holder for infringement or other improper or unauthorized use of any patented article, patented design, patented device, patented process, patented appliance or patented material in connection with this Contract. The Contractor shall be solely responsible for correcting or curing to the satisfaction of the DHHL any such infringement or improper or unauthorized use, including, without limitation: (a) furnishing at no cost to the DHHL a substitute article, design, device, process, appliance or material acceptable to the DHHL; (b) paying royalties or other required payments to the patent holder; (c) obtaining proper authorizations or releases from the patent holder; and (d) furnishing such security to or making such arrangement with the patent holder as may be necessary to correct or cure any such infringement or improper or unauthorized use. This

section shall not apply to any article, design, device, material, appliance or process covered by letters of patent or copyright, which the Contractor is required to use by the Drawings or Specifications.

7.16 SANITARY, HEALTH AND SAFETY PROVISIONS

7.16.1 The Contractor shall provide and maintain in a neat, sanitary condition such accommodations for the use of its employees as may be necessary to comply with the requirements of the State and local boards of health, or other bodies or tribunals having jurisdiction. Unless otherwise stated in the drawings or specifications, the Contractor shall install toilet facilities conveniently located at the job site and maintain same in a neat and sanitary condition for the use of the employees on the job site for the duration of the Contract. The toilet facilities shall conform to the requirements of the State Department of Health. The cost of installing, maintaining and removing the toilet facilities shall be considered incidental to and paid for under various contract pay items for work or under the lump sum bids as the case may be, and no additional compensation will be made therefor. These requirements shall not modify or abrogate in any way the requirements or regulations of the State Department of Health.

7.16.2 Attention is directed to Federal, State and local laws, rules and regulations concerning construction safety and health standards. The Contractor shall not require any worker to work in surroundings or under conditions which are unsanitary, hazardous or dangerous to their health or safety.

7.17 PROTECTION OF PERSONS AND PROPERTY

7.17.1 SAFETY PRECAUTIONS AND PROGRAMS. The Contractor shall be responsible for initiating, maintaining and supervising all safety precautions and programs in connection with the performance of the Contract. The Contractor shall take reasonable precautions for the safety of, and shall provide reasonable protection to prevent damage, injury or loss to:

7.17.1.1 All persons on the work site or who may be affected by the work;

7.17.1.2 All the work and materials and equipment to be incorporated therein, whether in storage on or off the site, under care, custody or control of the Contractor and its subcontractors; and

7.17.1.3 Other property at the site or adjacent thereto, including trees, shrubs, lawns, walks, pavement, roadways, structures and utilities not designated for removal, relocation or replacement in the course of construction.

7.17.2 Contractor shall give notices and comply with applicable laws, ordinances, regulations, rules, and lawful orders of any public body having jurisdiction for the safety of persons or property or their protection from damage, injury or loss; and the Contractor shall erect and maintain reasonable safeguards for safety and protection, including posting danger signs, or other warnings against hazards.

7.17.3 The Contractor shall notify owners of adjacent properties and of underground (or overhead) utilities when performing work which may affect the owners; and shall cooperate with the owners in the protection, removal and replacement of their property.

7.17.4 All damage, injury or loss to any property referred to in Subsections 7.17.1.2 and 7.17.1.3 caused by the fault or negligence or damage or loss attributable to acts or omissions directly or indirectly in whole or part by the Contractor a subcontractor or any one directly or indirectly employed by them, or by anyone for whose acts they might be liable, shall be remedied promptly by the Contractor.

7.17.5 The Contractor shall designate a responsible member of the Contractor's organization at the site whose duty shall be the protection of accidents. This person shall be the Contractor's superintendent unless otherwise designated by the Contractor.

7.17.6 The Contractor shall not load or permit any part of the construction to be loaded so as to endanger its safety. The Contractor shall not injure or destroy trees or shrubs nor remove or cut them without permission of the Project Manager. Contractor shall protect all land monuments and property marks until an authorized agent has witnessed or otherwise referenced their location and shall not remove them until directed.

7.17.7 In the event the Contractor encounters on the site, material reasonably believed to be asbestos or other hazard material that has not been rendered harmless, the Contractor shall stop work in the area and notify the Project Manager promptly. The work in the affected area shall be resumed in the absence of hazard materials or when the hazard has been rendered harmless.

7.17.8 EMERGENCIES. In an emergency affecting the safety and protection of persons or the work or property at the site or adjacent thereto, Contractor without special instructions or authorization from the Project Manager, shall act, at the Contractor's discretion, to prevent threatened damage, injury or loss. Contractor shall give the Project Manager prompt written notice of the emergency and actions taken. Additional compensation or extension of time claimed by the Contractor on account of an emergency shall be determined under the provisions of Section 7.25, DISPUTES AND CLAIMS.

7.18 ARCHAEOLOGICAL SITES

7.18.1 Should historic sites such as walls, platforms, pavements and mounds, or remains such as artifacts, burials, concentration of charcoal or shells be encountered during construction, work shall cease in the immediate vicinity of the find and the find shall be protected from further damage. The Contractor shall immediately notify the Project Manager and contact the State Historic Preservation Division which will assess the significance of the find and recommend the appropriate mitigation measures, if necessary.

7.18.2 When required, the Contractor shall provide and install any temporary fencing to protect archaeological sites within the project. The fencing shall be installed prior to any construction activity and shall be maintained by the Contractor for the duration of the project. Fence installation and maintenance shall be to the satisfaction of the Project Manager. The Contractor shall remove the fencing upon completion of construction, or as directed by the Project Manager.

7.18.3 No work shall be done within the temporary fencing area. If any construction work is done within the temporary fencing, the Contractor shall notify the Project Manager immediately; and if the Contractor entered the archaeological site area without permission, it shall stop work in this area immediately. The Project Manager shall notify the archaeologist to assess any damage to the area. The Contractor shall allow the archaeologist sufficient time to perform the field investigation.

7.18.4 Any site requiring data recovery within the project shall not be disturbed until data recovery is completed.

7.19 RESPONSIBILITY FOR DAMAGE CLAIMS; INDEMNITY

7.19.1 The CONTRACTOR shall defend, indemnify, and hold harmless the State of Hawaii, the contracting agency, and their officers, employees, and agents from and against all liability, loss, damage, cost,

and expense, including all attorneys' fees, and all claims, suits, and demands therefor, arising out of or resulting from the acts or omissions of the CONTRACTOR or the CONTRACTOR's employees, officers, agents, or subcontractors under this Contract. The provisions of this Subsection shall remain in full force and effect notwithstanding the expiration or early termination of this Contract.

7.19.2 The Contractor agrees that it will not attempt to hold the State and the Department, their officers, representatives, employees or agents, liable or responsible for any losses or damages to third parties from the action of the elements, the nature of the work to be done under these Contract Documents or from any unforeseen obstructions, acts of God, vandalism, fires or encumbrances which may be encountered in the prosecution of the work.

7.19.3 The Contractor shall pay all just claims for materials, supplies, tools, labor and other just claims against the Contractor or any subcontractor in connection with this contract and the surety bond will not be released by final acceptance and payment by the Department unless all such claims are paid or released. The Department may, but is not obligated to, withhold or retain as much of the monies due or to become due the Contractor under this contract considered necessary by the Project Manager to cover such just claims until satisfactory proof of payment or the establishment of a payment plan is presented.

7.19.4 The Contractor shall defend, indemnify and hold harmless the State and the Department, their officers, representatives, employees or agents from all suits, actions or claims of any character brought on account of any claims or amounts arising out of or recovered under the Workers' Compensation Laws or violation of any other law, by-law, ordinance, order or decree.

7.19.5 COST OF LITIGATION. In case the STATE shall, without any fault on its part, be made a party to any litigation commenced by or against the CONTRACTOR in connection with this Contract, the CONTRACTOR shall pay all costs and expenses incurred by or imposed on the STATE, including attorneys' fees.

7.20 CHARACTER OF WORKERS OR EQUIPMENT

7.20.1 The Contractor shall at all times provide adequate supervision and sufficient labor and equipment for prosecuting the work to full completion in the manner and within the time required by the contract.

7.20.2 Character and Proficiency of Workers - All workers shall possess the proper license and/or certification, job classification, skill and experience necessary to properly perform the work assigned to them. All workmen engaged in special work or skilled work, such as bituminous courses or mixtures, concrete pavement or structures, electrical installation, plumbing installation, or in any trade shall have sufficient experience in such work and in the operation of the equipment required to properly and satisfactorily perform all work. All workers shall make due and proper effort to execute the work in the manner prescribed in these Contract Documents, otherwise, the Project Manager may take action as prescribed herein.

7.20.2.1 Any worker employed on the project by the Contractor or by any subcontractor who, in the opinion of the Project Manager, is not careful and competent, does not perform its work in a proper and skillful manner or is disrespectful, intemperate, disorderly or neglects or refuses to comply with directions given, or is otherwise objectionable shall at the written request of the Project Manager, be removed forthwith by the Contractor or subcontractor employing such worker and shall not be employed again in any portion of the work without the written consent of the Project Manager. Should the Contractor or subcontractor continue to employ, or again employ such person or persons on the project, the

Project Manager may withhold all payments which are or may become due, or the Project Manager may suspend the work until the Project Manager's orders are followed, or both.

7.20.3 INSUFFICIENT WORKERS. A sufficient number of workers shall be present to ensure the work is accomplished at an acceptable rate. In addition, the proper ratio of apprentice to journey worker shall be maintained to ensure the work is properly supervised and performed. In the event that the Project Manager finds insufficient workers are present to accomplish the work at an acceptable rate of progress or if a adequate number of journey workers are not present and no corrective action is taken by the Contractor after being informed in writing, the Chairman may terminate the Contract as provided for under Section 7.27, TERMINATION OF CONTRACT FOR CAUSE.

7.20.4 EQUIPMENT REQUIREMENTS. All equipment furnished by the Contractor and used on the work shall be of such size and of such mechanical condition that the work can be performed in an acceptable manner at a satisfactory rate of progress and the quality of work produced will be satisfactory.

7.20.4.1 Equipment used on any portion of the project shall be such that no injury to the work, persons at or near the site, adjacent property or other objects will result from its use.

7.20.4.2 If the Contractor fails to provide adequate equipment for the work, the contract may be terminated as provided under Section 7.27, TERMINATION OF CONTRACT FOR CAUSE.

7.20.4.3 In the event that the Contractor furnishes and operates equipment on a force account basis, it shall be operated to obtain maximum production under the prevailing conditions.

7.21 CONTRACT TIME

7.21.1 Time is of the essence for this Contract.

7.21.2 CALCULATION OF CONTRACT TIME. When the contract time is on a working day basis, the total contract time allowed for the performance of the work shall be the number of working days shown in the contract plus any additional working days authorized in writing as provided hereinafter. Refer to ARTICLE 1, DEFINITIONS for the definition of Working Day. The count of elapsed working days to be charged against contract time shall begin from the date of the Notice to Proceed and shall continue consecutively to the date of Project Acceptance determined by the Project Manager. When the contract completion time is a fixed calendar date, it shall be the date on which all work on the project shall be completed. Maintenance periods are not included within the contract time unless specifically noted in the Contract Documents. Failure to complete the work by contract completion date shall not terminate the Contract.

7.21.3 MODIFICATIONS OF CONTRACT TIME (§3-125-4 HAR)

7.21.3.1 EXTENSIONS. For increases in the scope for work caused by alterations and additional work made under Section 4.2, CHANGES, the Contractor will be granted a time extension only if the changes increase the time of performance for the Contract. If the Contractor believes an extension of time is justified and is not adequately provided for in a Field Order, it must request the additional time sought in writing when the detailed cost breakdown required by Section 4.2, CHANGES, is submitted. The Contractor must show how the time of performance for the critical path will be affected and must also support the time extension request with schedules and statements from its subcontractors, suppliers, and/or manufacturers. Compensation for any altered or additional work will be paid as provided in Section 4.2, CHANGES.

7.21.3.2 The Department may direct changes to the work at any time until the work is finally accepted. The issuance of a Field Order at any time may alter or modify the contract duration only by the days specified therein; or if not specified therein, for the days the critical path must be extended for the change. Additional time to perform the extra work will be added to the time allowed in the contract without regard to the date the change directive was issued, even if the contract completion date has passed. A change requiring time will not constitute a waiver of pre-existing Contractor delay.

7.21.4 DELAY FOR PERMITS. For delays beyond the control of the Contractor in obtaining necessary permits, one day extension for each day delay may be granted by the Project Manager, provided the Contractor notifies the Project Manager that the permits are not available, as soon as the delay occurs. Time extensions shall be the exclusive relief granted on account of such delays. No additional compensation will be paid for these time extensions.

7.21.5 DELAYS BEYOND CONTRACTOR'S CONTROL. For delays affecting the critical path caused by acts of God, or the public enemy, fire, unusually severe weather, earthquakes, floods, epidemics, quarantine restrictions, labor disputes, freight embargoes and other reasons beyond the Contractor's control, the Contractor may be granted an extension of time provided that:

7.21.5.1 The Contractor notifies the Project Manager in writing within five (5) work days after the occurrence of the circumstances described above and states the possible effects on the completion date of the contract.

7.21.5.2 No time extension will be granted for weather conditions other than unusually severe weather occurrences, and floods.

7.21.5.3 The Contractor, if requested, submits to the Project Manager within ten (10) work days after the request, a written statement describing the delay to the project. The extent of delay must be substantiated as follows:

(a) State specifically the reason or reasons for the delay and fully explain in a detailed chronology the effect of this delay to the work and/or the completion date;
(b) Submit copies of purchase order, delivery tag, and any other pertinent documentation to support the time extension request;
(c) Cite the period of delay and the time extension requested; and
(d) A statement either that the above circumstances have been cleared and normal working conditions restored as of a certain day or that the above circumstances will continue to prevent completion of the project.

7.21.5.4 Time extensions shall be the exclusive relief granted and no additional compensation will be paid the Contractor for such delays.

7.21.6 DELAYS IN DELIVERY OF MATERIALS. For delays in delivery of materials and/or equipment which occur as a result of unforeseeable causes beyond the control and without fault or negligence of the Contractor, its subcontractor(s) or supplier(s), the Contractor may be granted an extension of time provided it complies with the following procedures:

7.21.6.1 The Contractor must notify the Project Manager in writing within five (5) consecutive working days after it first has any knowledge of delays or anticipated delays and state the effects such delays may have on the completion date of the Contract.

7.21.6.2 The Contractor, if requested, must submit to the Project Manager within ten (10) working days after a firm delivery date for the material and equipment is established, a written statement as to the delay to the progress of the project. The delay must be substantiated as follows:

(a) State specifically the reason or reasons for the delay. Explain in a detailed chronology the effect of this delay to the other work and / or the completion date;

(b) Submit copies of purchase order(s), factory invoice(s), bill(s) of lading, shipping manifest(s), delivery tag(s) and any other pertinent correspondence to support the time extension request; and

(c) Cite the start and end date of the delay and the days requested therefore. The delay shall not exceed the difference between the originally scheduled delivery date versus the actual delivery date.

7.21.6.3 Time extensions shall be the exclusive relief granted and no additional compensation will be paid the Contractor on account of such delay.

7.21.7 DELAYS FOR SUSPENSION OF WORK. Delay during periods of suspension of the work by the Project Manager shall be computed as follows:

7.21.7.1 When the performance of the work is totally suspended for one (1) or more days (calendar or working days, as appropriate) by order of the Project Manager in accordance with Subsections 7.24.1.1, 7.24.1.2, 7.24.1.4 or 7.24.1.6 the number of days from the effective date of the Project Manager's order to suspend operations to the effective date of the Project Manager's order to resume operations shall not be counted as contract time and the contract completion date will be adjusted. Should the Contractor claim for additional days in excess of the suspension period, Contractor shall provide evidence justifying the additional time. During periods of partial suspensions of the work, the Contractor will be granted a time extension only if the partial suspension affects the critical path. If the Contractor believes that an extension of time is justified for a partial suspension of work, it must request the extension in writing at least five (5) working days before the partial suspension will affect the critical operation(s) in progress. The Contractor must show how the critical path was increased based on the status of the work and must also support its claim, if requested, with statements from its subcontractors. A suspension of work will not constitute a waiver of pre-existing Contractor delay.

7.21.8 CONTRACTOR CAUSED DELAYS - No time extension will be considered for the following:

7.21.8.1 Delays in performing the work caused by the Contractor, subcontractor and/or supplier;

7.21.8.2 Delays in arrival of materials and equipment caused by the Contractor, subcontractor and / or supplier in ordering, fabricating, delivery, etc.;

7.21.8.3 Delays requested for changes which the Project Manager determines unjustifiable due to the lack of supporting evidence or because the change is not on the critical path;

7.21.8.4 Delays caused by the failure of the Contractor to submit for review and acceptance by the Project Manager, on a timely basis, pricing proposals, shop drawings, descriptive sheets, material samples, color samples, etc. except as covered in Subsection 7.21.5 and 7.21.6;

7.21.8.5 Failure to follow the procedure within the time allowed to qualify for a time extension; and

7.21.8.6 Days the Contractor is unable to work due to normal rainfall or other normal bad weather day conditions.

7.21.9 REDUCTION IN TIME - If the Department deletes any portion of the work, an appropriate reduction of contract time may be made in accordance with Section 4.2, CHANGES.

7.22 CONSTRUCTION SCHEDULE

7.22.1 The Contractor shall submit its detailed construction schedule to the Project Manager prior to the start of the work. The purpose of the schedule is to allow the Project Manager to monitor the Contractor's progress on the work. The schedule shall account for normal inclement weather, unusual soil or other conditions that may influence the progress of the work, schedules and coordination required by any utility, off or on site fabrications, and all other pertinent factors that relate to progress.

7.22.2 Submittal of and the Project Manager's receipt of the construction schedule shall not imply the Department's approval of the schedule's breakdown, its individual elements, and any critical path that may be shown. Any acceptance or approval of the schedule: (1) shall be for general format only and not for sequences or durations thereon; and (2) shall not be deemed an agreement by the Department that the construction means, methods and resources shown on the schedule will result in work that conforms to the contract requirements. The Contractor has the risk of all elements (whether or not shown) of the schedule and its execution.

7.22.3 In the event the Contractor submits and the Department receives an accelerated schedule (shorter than the contract time), such will not constitute an agreement to modify the contract time or completion date, nor will the receipt, acceptance or approval of such a schedule incur any obligation by the Department. The Contractor shall be solely responsible for and shall accept all risks and any delays that may materialize during the construction work until the contract completion date is reached. The contract time or completion date is established for the benefit of the Department and cannot be changed without an appropriate change order issued by the Department. All float on an accelerated schedule belongs exclusively to the Department. The Department will not be responsible for or obligated to accept the work before the completion date established by the Contract.

7.23 STATEMENT OF WORKING DAYS - For all contracts on a working day basis, the Contractor will submit a statement of the number of working days for each month together with the Monthly Payment Application. The Monthly Payment Application will not be processed without the statement of working days.

7.24 SUSPENSION OF WORK (§3-125-7 HAR)

7.24.1 PROCEDURE TO BE FOLLOWED. The Chairman may, by written order to the Contractor, at any time and without notice to any surety, suspend the performance of the work either in whole or in part for any cause, including but not limited to:

7.24.1.1 Weather or excess bad weather days, considered unsuitable by the Project Manager for prosecution of the work; or

7.24.1.2 Soil Conditions considered unsuitable by the Project Manager for prosecution of the work; or 7.24.1.3 Failure of the Contractor to:

(a) Correct conditions unsafe for the general public or for the workers;
(b) Carry out orders given by the Project Manager;
(c) Perform the work in strict compliance with the provisions of the contract; or
(d) Provide a qualified Superintendent on the jobsite as described under Subsection 5.9.2, SUPERINTENDENT.

7.24.1.4 When any redesign is deemed necessary by the Project Manager; or

7.24.1.5 Disturbance due to noise, odors or dust arising from the construction even if such disturbance does not violate the section on Environmental Protection contained in the Contract Documents; or

7.24.1.6 The convenience of the Department.

7.24.2 PARTIAL OR TOTAL SUSPENSION OF WORK. Suspension of work on some but not all items of work shall be considered a partial suspension. Suspension of work on the entire work at the job site shall be considered total suspension. The period of suspension shall be computed as set forth in Subsection 7.21.7, Delays for Suspension of Work.

7.24.3 PAYMENT

7.24.3.1 In the event that the Contractor is ordered by the Chairman in writing as provided herein to suspend all work under the contract in accordance with Subsections 7.24.1.4 or 7.24.1.6, the Contractor may be reimbursed for actual direct costs incurred on work at the jobsite, as authorized in writing by the Chairman, including costs expended for the protection of the work. Payment for equipment which must standby during such suspension of work shall be made as described in clause 8.3.4.5.(e). No payment will be made for profit on any suspension costs. An allowance of five percent (5%) will be paid on any reimbursed actual costs for indirect categories of delay costs, including extended branch and home-office overhead and delay impact costs.

7.24.3.2 However, no adjustment to the contract amount or time shall be made under this Section 7.24, SUSPENSION OF WORK (§3-125-7 HAR) for any suspension, delay, or interruption:

(a) To the extent that performance would have been so suspended, delayed, or interrupted by any other cause, including the fault or negligence of the Contractor; or

(b) For which an adjustment is provided for or excluded under any other provision of this Contract.

7.24.3.3 Any adjustment in contract price made pursuant to this subsection shall be determined in accordance with this Section 7.24, SUSPENSION OF WORK (§3-125-7 HAR) and Section 4.2, CHANGES.

7.24.3.4 Claims for such compensation shall be filed with the Project Manager within ten (10) calendar days after the date of the order to resume work or such claims will be waived by the Contractor. Together with the claim, the Contractor shall submit substantiating documents supporting the entire amount shown on the claim. The Chairman may make such investigations as are deemed necessary and shall be the sole judge of the claim and the Chairman's decision shall be final.

7.24.4 CLAIMS NOT ALLOWED. No claim under this Section 7.24, SUSPENSION OF WORK (§3-125-7 HAR) shall be allowed:

7.24.4.1 For any direct costs incurred more than twenty (20) days before the Contractor shall have notified the Project Manager in writing of any suspension that the Contractor considers compensable. This requirement shall not apply as to a claim resulting from a suspension order under Subsections 7.24.1.4 or 7.24.1.6; and 7.24.4.2 Unless the claim is asserted in writing within ten (10) calendar days after the termination of such suspension, delay, or interruption, but in no case not later than the date of final payment under the contract.

7.24.4.2 No provision of this Section 7.24, SUSPENSION OF WORK (§3-125-7 HAR) shall be construed as entitling the Contractor to compensation for delays due to failure of surety, for suspensions made at

the request of the Contractor, for any delay required under the Contract, for partial suspension of work or for suspensions made by the Project Manager under the provisions of Subsections 7.24.1.1, 7.24.1.2, 7.24.1.3 and 7.24.1.5.

7.25 DISPUTES AND CLAIMS (§3-126-31 HAR). Disputes shall be resolved in accordance with Section 103D-703, HRS, and chapter 126, Procurement Rules, as the same may be amended from time to time.

7.25.1 REQUIRED NOTIFICATION. As a condition precedent for any claim, the Contractor must give notice in writing to the Project Manager in the manner and within the time periods stated in Section 4.2, CHANGES for claims for extra compensation, damages, or an extension of time due for one or more of the following reasons:

7.25.1.1 Requirements not clearly covered in the Contract, or not ordered by the Project Manager as an extra;

7.25.1.2 Failure by the Department and Contractor to agree to an Oral Order or an adjustment in price or contract time for a Field Order or a Change Order (which was not previously agreed on by a Field Order), issued by the Department;

7.25.1.3 An action or omission by the Project Manager requiring performance changes beyond the scope of the Contract; and/or

7.25.1.4 Failure of the Department to issue a Field Order for controversies within the scope of Section 4.2, CHANGES.

7.25.1.5 For any other type of claim, the Contractor shall give notice within the time periods set forth in contract provisions pertaining to that event. If no specific contract provisions pertain to the claim, then the written notice of claim must be submitted within fifteen (15) days of the event giving rise to the claim.

7.25.2 CONTINUED PERFORMANCE OF WORK. The Contractor shall at all times continue with performance of the contract in full compliance with the directions of the Project Manager. Continued performance by the Contractor shall not be deemed a waiver of any claim for additional compensation, damages, or an extension of time for completion, provided that the written notice of claim is submitted in accordance with Subsection 7.25.1, REQUIRED NOTIFICATION.

7.25.3 The requirement for timely written notice shall be a condition precedent to the assertion of a claim.

7.25.4 REQUIREMENTS FOR NOTICE OF CLAIM. The notice of claim shall clearly state the Contractor's intention to make claim and the reasons why the Contractor believes that additional compensation, changes or an extension of time may be remedies to which it is entitled. At a minimum, it shall provide the following:

7.25.4.1 Date of the protested order, decision or action;

7.25.4.2 The nature and circumstances which caused the claim;

7.25.4.3 The contract provision(s) that support the claim;

7.25.4.4 The estimated dollar cost, if any, of the protested work and how that estimate was determined; and

7.25.4.5 An analysis of the progress schedule showing the schedule change or disruption if the Contractor is asserting a schedule change or disruption.

7.25.5 If the protest or claim is continuing, the information required in Subsection 7.25.4 REQUIREMENTS FOR NOTICE OF CLAIMS above shall be supplemented as requested by the Project Manager.

7.25.6 FINAL STATEMENT FOR CLAIM. The Contractor shall provide a final written statement of the actual adjustment in contract price and/or contract time requested for each notice of claim. Such statement shall clearly set forth that it is the final statement for that notice of claim. All such final statements shall be submitted within thirty (30) days after completion of the work that is the subject of the claim, but in no event no later than thirty (30) days after the Project Acceptance Date or the date of termination of the Contractor, whichever comes first.

7.25.7 All claims of any nature are barred if asserted after final payment under this Contract has been made.

7.25.8 Contractor may protest the assessment or determination by the Project Manager of amounts due the Department from the Contractor by providing a written notice to the Chairman within thirty (30) days of the date of the written assessment or determination. Said notice shall comply with all requirements of Subsections 7.25.4, REQUIREMENTS FOR NOTICE OF CLAIM and 7.25.6, FINAL STATEMENT FOR CLAIM above. The requirement of such notice cannot be waived and it is a condition precedent to any claim by the Contractor. Failure to comply with these notice provisions constitutes a waiver of any claim.

7.25.9 In addition to the requirements of Subsections 7.25.4, 7.25.6, and 7.25.8, all final written statements of claim shall be certified. This certification requirement applies to the Contractor without exception, including, but not limited to, situations involving claims of subcontractors or suppliers which meet the requirements of Subsection 5.13.4. The certification must be executed by a person duly authorized to bind the Contractor with respect to the claim. The certification shall state as follows:

> "I certify that the claim is made in good faith; that the supporting data are accurate and complete to the best of my knowledge and belief; that the amount requested accurately reflects the contract adjustment for which the Contractor believes the Department is liable; and that I am duly authorized to certify the claim on behalf of the Contractor."

7.25.10 DECISION ON CLAIM/APPEAL. The decision of the Chairman on the claim shall be final and conclusive, unless fraudulent, or unless the Contractor delivers to the Chairman a written appeal of the Chairman's decision. Said appeal shall be delivered to the Chairman no later than thirty (30) days after the date of the Chairman's decision.

7.25.10.1 In that event, the decision of the Chairman shall be final and conclusive, unless fraudulent or unless the Contractor brings an action seeking judicial review of the Chairman's decision in an appropriate circuit court of this State within six (6) months from the date of the Chairman's decision.

7.25.11 PAYMENT AND INTEREST. The amount determined payable pursuant to the decision, less any portion already paid, normally should be paid without awaiting Contractor action concerning appeal. Such payments shall be without prejudice to the rights of either party. Interest on amounts ultimately determined to be due to a Contractor shall be payable at the Statutory rate applicable to judgments against the State under Chapter 662, HRS from the date of receipt of a properly certified final written statement of actual adjustment required until the date of decision; except, however, that if an action is initiated in circuit court, interest under this Section 7.25, DISPUTES AND CLAIMS (§3-126-31 HAR) shall only be calculated until the time such action is initiated. Interest on amounts due the

Department from the Contractor shall be payable at the same rate from the date of issuance of the Project Manager's notice to the Contractor. Where such payments are required to be returned by a subsequent decision, interest on such payments shall be paid at the statutory rate from the date of payment.

7.25.12 Contractor shall comply with any decision of the Chairman and proceed diligently with performance of this contract pending final resolution by a circuit court of this State of any controversy arising under, or by virtue of, this Contract, except where there has been a material breach of contract by the Department; provided that in any event the Contractor shall proceed diligently with the performance of the Contract where the Project Manager has made a written determination that continuation of work under the Contract is essential to the public health and safety.

7.25.13 WAIVER OF ATTORNEY'S FEES. In the event of any litigation arising under, or by virtue of, this Contract, the Contractor and the Department agree to waive all claims against each other for attorney's fees and agree to refrain from seeking attorney's fees as part of any award or relief from any court.

7.26 FAILURE TO COMPLETE THE WORK ON TIME

7.26.1 Completion of the work within the required time is important because delay in the prosecution of the work will inconvenience the public and interfere with the Department's business. In addition, the Department will be damaged by the inability to obtain full use of the completed work and by increased engineering, inspection, superintendence, and administrative services in connection with the work. Furthermore, delay may detrimentally impact the financing, planning, or completion of other Department projects because of the need to devote Department resources to the project after the required completion date. The monetary amount of such public inconvenience, interference with Department business, and damages, is difficult, if not impossible, to accurately determine and precisely prove. Therefore, it is hereby agreed that the amount of such damages shall be the appropriate sum of liquidated damages.

7.26.1.1 When the Contractor fails to complete the work or any portion of the work within the time or times fixed in the contract or any extension thereof, it is agreed the Contractor shall pay liquidated damages to the Department in the amount of $1,000 (one thousand dollars) per calendar day, unless otherwise indicated in the Special Conditions.

7.26.1.2 If the Contractor fails to correct Punchlist deficiencies as required by Section 7.32, PROJECT ACCEPTANCE DATE, the Department will be inconvenienced and damaged, therefore, it is agreed that the Contractor shall pay liquidated damages to the Department based upon the amount stated inSection 7.26.1.1. Liquidated damages shall accrue for all days after the Contract Completion Date or any extension thereof, until the date the Punchlist items are corrected and accepted by the Project Manager.

7.26.1.3 If the Contractor fails to submit final documents as required by Section 7.33, FINAL SETTLEMENT OF CONTRACT, the Department will be inconvenienced and damaged, therefore, it is agreed that the Contractor shall pay liquidated damages to the Department in the amount stated in the Section 7.26.1.1. Liquidated damages shall accrue for all days after the Contract Completion Date or any extension thereof, until the date the final documents are received by the Project Manager.

7.26.1.4 The Project Manager shall assess the total amount of liquidated damages in accordance with the amount of $1,000 (one thousand dollars) per day, unless otherwise indicated in the Special Conditions, and provide written notice of such assessment to the Contractor.

7.26.2 ACCEPTANCE OF LIQUIDATED DAMAGES. The assessment of liquidated damages by the Project Manager shall be accepted by the parties hereto as final, unless the Contractor delivers a written appeal of the Project Manager's decision in accordance with Subsection 7.25.10, DECISION ON CLAIM/APPEAL REQUIREMENTS. Any allowance of time or remission of charges or liquidated damages shall in no other manner affect the rights or obligations of the parties under this contract nor be construed to prevent action under Section 7.27, TERMINATION OF CONTRACT FOR CAUSE. If the Department terminates the Contractor's right to proceed, the resulting damage will include such liquidated damages for such time as may be required for final completion of the work after the required contract completion date.

7.26.3 PAYMENTS FOR LIQUIDATED DAMAGES. Liquidated damages shall be deducted from monies due or that may become due to the Contractor under the contract or from other monies that may be due or become due to the Contractor from the Department.

7.26.4 If the Contractor contests the per diem liquidated charge, the Department may elect to recover the actual damages caused by the Contractor's delay. Should the Department claim liquidated damages for delay and if such liquidated damages are disallowed for any reason, the Department shall recover the actual damages to which it is legally entitled as a result of the Contractor's delay or other breach.

7.27 TERMINATION OF CONTRACT FOR CAUSE (§3-125-18 HAR)

7.27.1 DEFAULT. If the Contractor refuses or fails to perform the work, or any separable part thereof, with such diligence as will assure its completion within the time specified in this contract, or any extension thereof, fails to complete the work within such time, or commits any other material breach of this contract, and further fails within seven (7) days after receipt of written notice from the Project Manager to commence and continue correction of the refusal or failure with diligence and promptness, the Chairman may, by written notice to the Contractor, declare the Contractor in breach and terminate the Contractor's right to proceed with the work or the part of the work as to which there has been delay or other breach of contract. In such event, the Department may take over the work and perform the same to completion, by contract or otherwise, and may take possession of, and utilize in completing the work, the materials, appliances, and plant as may be on the site of the work and necessary therefor. Whether or not the Contractor's right to proceed with the work is terminated, the Contractor and the Contractor's sureties shall be liable for any damage to the Department resulting from the Contractor's refusal or failure to complete the work within the specified time.

7.27.2 ADDITIONAL RIGHTS AND REMEDIES. The rights and remedies of the Department provided in this contract are in addition to any other rights and remedies provided by law.

7.27.3 COSTS AND CHARGES

7.27.3.1 All costs and charges incurred by the Department, together with the cost of completing the work under contract, will be deducted from any monies due or which would or might have become due to the Contractor had it been allowed to complete the work under the contract. If such expense exceeds the sum which would have been payable under the contract, then the Contractor and the surety shall be liable and shall pay the Department the amount of the excess.

7.27.3.2 In case of termination, the Chairman shall limit any payment to the Contractor to the part of the contract satisfactorily completed at the time of termination. Payment will not be made until the work has satisfactorily been completed and the tax clearance required by Section 8.8, FINAL PAYMENT

is submitted by the Contractor. Termination shall not relieve the Contractor or Surety from liability for liquidated damages.

7.27.4 ERRONEOUS TERMINATION FOR CAUSE. If, after notice of termination of the Contractor's right to proceed under this Section 7.27, TERMINATION OF CONTRACT FOR CAUSE (§3-125-18 HAR) it is determined for any reason that good cause did not exist to allow the Department to terminate as provided herein, the rights and obligations of the parties shall be the same as, and the relief afforded the Contractor shall be limited to, the provisions contained in Section 7.28, TERMINATION FOR CONVENIENCE.

7.28 TERMINATION FOR CONVENIENCE (§3-125-22 HAR)

7.28.1 TERMINATION. The Chairman may, when the interests of the Department so require, terminate this contract in whole or in part, for the convenience of the Department. The Chairman shall give written notice of the termination to the Contractor specifying the part of the contract terminated and when termination becomes effective.

7.28.2 CONTRACTOR'S OBLIGATIONS. The Contractor shall incur no further obligations in connection with the terminated work and on the date set in the notice of termination the Contractor will stop work to the extent specified. The Contractor shall also terminate outstanding orders and subcontracts as they relate to the terminated work. The Contractor shall settle the liabilities and claims arising out of the termination of subcontracts and orders connected with the terminated work subject to the Department's approval. The Chairman may direct the Contractor to assign the Contractor's right, title, and interest under terminated orders or subcontracts to the Department. The Contractor must still complete the work not terminated by the notice of termination and may incur obligations as necessary to do so.

7.28.3 RIGHT TO CONSTRUCTION AND GOODS. The Chairman may require the Contractor to transfer title and delivery to the Department in the manner and to the extent directed by the Chairman, the following:

7.28.3.1 Any completed work; and

7.28.3.2 Any partially completed construction, goods, materials, parts, tools, dies, jigs, fixtures, drawings, information, and contract rights (hereinafter called "construction material") that the Contractor has specifically produced or specially acquired for the performance of the terminated part of this contract.

7.28.3.3 The Contractor shall protect and preserve all property in the possession of the Contractor in which the Department has an interest. If the Chairman does not elect to retain any such property, the Contractor shall use its best efforts to sell such property and construction material for the Department's account in accordance with the standards of Section 490:2-706, HRS.

7.28.4 COMPENSATION

7.28.4.1 Contractor shall submit a termination claim specifying the amounts due because of the termination for convenience together with cost or pricing data, submitted to the extent required by subchapter 15, chapter 3-122, HAR. If the Contractor fails to file a termination claim within one (1) year from the effective date of termination, the Chairman may pay the Contractor, if at all, an amount set in accordance with Subsection 7.28.4.3.

7.28.4.2 The Chairman and the Contractor may agree to a settlement provided the Contractor has filed a termination claim supported by cost or pricing data submitted as required and that the settlement does not exceed the total contract price plus settlement costs reduced by payments previously made by the Department, the proceeds of any sales of construction, supplies, and construction materials under Subsection 7.28.3.3 of this Section, and the contract price of the work not terminated.

7.28.4.3 Absent complete agreement, the Chairman shall pay the Contractor the following amounts, less any payments previously made under the Contract.

(a) The cost of all contract work performed prior to the effective date of the notice of termination work plus a five percent (5%) markup on the actual direct costs, including amounts paid to subcontractor(s), less amounts previously paid or to be paid for completed portions of such work; provided, however, that if it appears that the Contractor would have sustained a loss if the entire contract would have been completed, no markup shall be allowed or included and the amount of compensation shall be reduced to reflect the anticipated rate of loss. No anticipated profit or consequential damage will be due or paid.

(b) Subcontractors shall be paid a markup of ten percent (10%) on their direct job costs incurred to the date of termination. No anticipated profit or consequential damage will be due or paid to any subcontractor. These costs must not include payments made to the Contractor for subcontract work during the contract period.

(c) In any case, the total sum to be paid the Contractor shall not exceed the total contract price reduced by the amount of any sales of construction supplies, and construction materials.

7.28.4.4 Costs claimed, agreed to, or established by the Department shall be in accordance with chapter 3-123, HAR.

7.29 CORRECTING DEFECTS. If the Contractor fails to commence to correct any defects of any nature, within ten (10) working days after the correction thereof has been requested in writing by the Department, and thereafter to expeditiously complete the correction of said defects, the Project Manager may without further notice to the Contractor or surety and without termination of contract, correct the defects and deduct the cost thereof from the contract price.

7.30 FINAL CLEANING. Before final inspection of the work, the Contractor shall clean all ground occupied by the Contractor in connection with the work of all rubbish, excess materials, temporary structures and equipment, and all parts of the work must be left in a neat and presentable condition to the satisfaction of the Project Manager. However, the Contractor shall not remove any warning and directional signs prior to the formal acceptance by the Project Manager. Full compensation for final cleaning will be included in the prices paid for the various items of work or lump sum bid, as the case may be, and no separate payment will be made therefor.

7.31 SUBSTANTIAL COMPLETION AND FINAL INSPECTION. Before the Department accepts the project as being completed, unless otherwise stipulated by the Project Manager the following procedure shall be followed:

7.31.1 SUBSTANTIAL COMPLETION

7.31.1.1 The Contractor and its subcontractors shall inspect the project to confirm whether the Project is Substantially Complete. This inspection effort shall include the testing of all equipment and providing a Punchlist that identifies deficiencies which must be corrected. Contractor shall make the corrections and if required repeat the procedure. Also, the Contractor shall schedule final Building, Plumbing, Electrical, Elevator, Fire and other required inspections and obtain final approvals.

(a) When in compliance with the above requirements, the Contractor shall notify the Project Manager in writing that project is Substantially Complete and ready for a Final Inspection. Along with the Substantial Completion notification, the Contractor shall provide its Punchlist(s) with the status of the deficiencies and dates when the deficiencies were corrected. The Project Inspector and / or the Project Manager shall make a preliminary determination whether project is Substantially Complete.

(b) If the Project is not Substantially Complete, the Project Manager shall inform the Contractor. The Contractor shall identify deficiencies which must be corrected, update its Punchlist, make the necessary corrections and repeat the previous step. After completing the necessary work, the Contractor shall notify the Project Manager in writing that Punchlist deficiencies have been corrected and the project is ready for a Final Inspection.

(c) If the Project is Substantially Complete, the Project Manager shall schedule a Final Inspection within fifteen (15) days of the Contractor's notification letter or as otherwise determined by the Project Manager.

7.31.1.2 In addition, and to facilitate closing of the project, the Contractor shall also proceed to obtain the following closing documents (where applicable) prior to the Final Inspection:

(a) Field-Posted As-Built Drawings;
(b) Maintenance Service Contract and two (2) copies of a list of all equipment;
(c) Five (5) sets of operating and maintenance manuals;
(d) Air conditioning test and balance reports; and
(e) Any other final submittal required by the Contract.

7.31.2 FINAL INSPECTION. If at the Final Inspection the Project Manager determines that all work is completed, the Project Manager shall notify the Contractor in accordance with Section 7.32, PROJECT ACCEPTANCE DATE. Should there be remaining deficiencies which must be corrected the Contractor shall provide an updated Punchlist to the Project Manager, within five (5) days from the Final Inspection Date. The Contractor shall make the necessary corrections.

7.31.2.1 The Project Manager shall confirm the list of deficiencies noted by the Contractor's punchlist(s) and will notify the Contractor of any other deficiencies that must be corrected before final settlement.

7.31.3 The Project Manager may add to or otherwise modify the Punchlist from time to time. The Contractor shall take immediate action to correct the deficiencies.

7.31.4 REVOKING SUBSTANTIAL COMPLETION. At any time before final Project Acceptance is issued the Project Manager may revoke the determination of Substantial Completion if the Project Manager finds it was not warranted. The Project Manager shall notify the Contractor in writing with the reasons and outstanding deficiencies negating the declaration. Once notified, the Contractor shall make the necessary corrections and repeat the required steps noted in Subsections 7.31.1 and 7.31.2.

7.32 PROJECT ACCEPTANCE DATE

7.32.1 If upon Final Inspection, the Project Manager finds that the project has been satisfactorily completed in compliance with the contract, the Project Manager shall declare the project completed and accepted and will notify the Contractor in writing of the acceptance by way of the Project Acceptance Notice.

7.32.2 PROTECTION AND MAINTENANCE. After the Project Acceptance Date, the Contractor shall be relieved of maintaining and protecting the work except that this does not hold true for those portions of the work which have not been accepted, including Punchlist deficiencies. The Department shall be responsible for the protection and maintenance of the accepted facility.

7.32.3 The date of Project Acceptance shall determine:

7.32.3.1 End of Contract Time;

7.32.3.2 Commencement of all guaranty periods except as noted in Section 7.34, CONTRACTOR'S RESPONSIBILITY FOR WORK: RISK OF LOSS; and

7.32.3.3 Commencement of all maintenance services except as noted in Section 7.34, CONTRACTOR'S RESPONSIBILITY FOR WORK: RISK OF LOSS.

7.32.4 PUNCHLIST REQUIREMENTS. If a Punchlist is required under Section 7.31, SUBSTANTIAL COMPLETION AND FINAL INSPECTION, the Project Acceptance Notice will include the Project Manager's Punchlist and the date when correction of the deficiencies must be completed.

7.32.5 Upon receiving the Punchlist, the Contractor shall promptly devote the required time, labor, equipment, materials and incidentals necessary to correct the deficiencies expeditiously.

7.32.6 For those items of work that cannot be completed by the established date, the Contractor shall submit a schedule in writing to the Project Manager for approval along with documentation to justify the time required, no later than five (5) working days before the date stipulated for completion of the Punchlist work. A Proposed schedule submitted after the five (5) day period will not be considered.

7.32.7 FAILURE TO CORRECT DEFICIENCIES. After the Contract Completion Date, or any extension thereof, if the Contractor fails to correct the deficiencies within the established date or agreed to Punchlist completion date, the Project Manager shall assess liquidated damages as required by Section 7.26, FAILURE TO COMPLETE THE WORK ON TIME.

7.32.8 If the Contractor fails to correct the deficiencies and complete the work by the established or agreed to date, the Department also reserves the right to correct the deficiencies by whatever method it deems necessary and deduct the cost from the final payment due the Contractor.

7.32.9 The Contractor may further be prohibited from bidding in accordance with Section 2.12, DISQUALIFICATION OF BIDDERS. In addition, assessment of damages shall not prevent action under Section 7.27, TERMINATION OF CONTRACT FOR CAUSE.

7.33 FINAL SETTLEMENT OF CONTRACT

7.33.1 The contract will be considered settled after the project acceptance date and when the following items have been satisfactorily submitted, where applicable:

7.33.1.1 Necessary Submissions in addition to the items noted under Subsection 7.31.1.2.

7.33.1.2 All written guarantees required by the contract.

7.33.1.3 Complete and certified weekly payrolls for the Contractor and its Subcontractor(s).

7.33.1.4 Certificate of Plumbing and Electrical Inspection.

7.33.1.5 Certificate of Building Occupancy.

7.33.1.6 Certificate for Soil Treatment and Wood Treatment.

7.33.1.7 Certificate of Water System Chlorination.

7.33.1.8 Certificate of Elevator Inspection, Boiler and Pressure Pipe installation.

7.33.1.9 Certification of compliance with §103B-3 HRS, Employment of State Residents.

7.33.1.10 All other documents required by the Contract.

7.33.2 FAILURE TO SUBMIT CLOSING DOCUMENTS. The Contractor shall submit the final Payment Application and the above applicable closing documents within sixty (60) days from the date of Project Acceptance or the agreed to Punchlist completion date. Should the Contractor fail to comply with these requirements, the Chairman may terminate the Contract for cause. The pertinent provisions of Section 7.27, TERMINATION OF CONTRACT FOR CAUSE shall be applicable.

7.33.3 In addition, should the Contractor fail to furnish final closing documents within the required time period, the Project Manager shall assess liquidated damages as required by Section 7.26, FAILURE TO COMPLETE THE WORK ON TIME.

7.34 CONTRACTOR'S RESPONSIBILITY FOR WORK; RISK OF LOSS

7.34.1 Until the establishment of the Project Acceptance Date or Beneficial Occupancy, whichever is sooner, the Contractor shall take every necessary precaution against injury or damage to any part of the work caused by the perils insured by an All Risk policy, whether arising from the execution or from the non-execution of the work. The Contractor shall rebuild, repair, restore and make good all injuries or damage to any portion of the work occasioned by the perils insured by an All Risk policy before the date of final acceptance and shall bear the risk and expense thereof.

7.34.2 After the Project Acceptance Date or Beneficial Occupancy, whichever is sooner, the Contractor shall be relieved of maintaining and protecting the work except for those portions of the work which have not been accepted including Punchlist deficiencies.

7.34.3 The risk of damage to the work from any hazard or occurrence that may be covered by a required Property Insurance policy is that of the Contractor, unless such risk of loss is placed elsewhere by express language in the Contract Documents. No claims for any loss or damage shall be recognized by the Department, nor will any such loss or damage excuse the complete and satisfactory performance of the Contract by the Contractor.

7.35 GUARANTEE OF WORK

7.35.1 In addition to any required manufacturers warranties, all work and equipment shall be guaranteed by the Contractor against defects in materials, equipment or workmanship for one year from the Project Acceptance Date or as otherwise specified in the Contract Documents.

7.35.2 REPAIR OF WORK. If, within any guarantee period, repairs or changes are required in connection with the guaranteed work, which in the opinion of the Project Manager is necessary due to materials, equipment or workmanship which are inferior, defective or not in accordance with the terms of the Contract, the Contractor shall within five (5) working days and without expense to the Department commence to:

7.35.2.1 Place in satisfactory condition in every instance all such guaranteed work and correct all defects therein; and

7.35.2.2 Make good and repair or replace to new or pre-existing condition all damages to the building, facility, work or equipment or contents thereof, resulting from such defective materials, equipment or installation thereof.

7.35.3 MANUFACTURER'S AND INSTALLER'S GUARANTEE. Whenever a manufacturer's or installer's guarantee on any product specified in the respective Specification sections, exceeds one year, this guarantee shall become part of this contract in addition to the Contractor's guarantee. Contractor shall complete the guarantee forms in the name of the Department and submit such forms to the manufacturer within such time required to validate the guarantee. Contractor shall submit to the Department a photocopy of the completed guarantee form for the Department's record as evidence that such guarantee form was executed by the manufacturer.

7.35.4 If a defect is discovered during a guarantee period, all repairs and corrections to the defective items when corrected shall again be guaranteed for the original full guarantee period. The guarantee period shall be tolled and suspended for all work affected by the defect. The guarantee period for work affected by the defect shall restart for its remaining duration upon confirmation by the Project Manager that the deficiencies have been repaired or remedied.

7.36 WORK OF AND CHARGES BY UTILITIES

7.36.1 The Contractor shall be responsible for scheduling and coordinating the work with the utility companies and applicable governmental agencies for permanent service installation and connections or modifications to existing utilities. The Contractor shall make available all portions of the work necessary for the utility companies to do their work. The Department shall not bear the risk of any damage to the contract work caused by any utility company, and work of repairing such damage and delay costs must be resolved between the Contractor, the utility company, and their insurers.

7.36.2 Unless stated as an allowance item to be paid by the Contractor, the Department will pay the utility companies and applicable governmental agencies directly for necessary modifications and connections. Contractor charges for overhead, supervision, coordination, profit, insurance and any other incidental expenses shall be included in the Contractor's Bid whether the utility is paid directly by the Department or by an allowance item in the Contract.

7.37 RIGHT TO AUDIT RECORDS

7.37.1 The STATE may, at reasonable times and places, audit the books and records of the CONTRACTOR, prospective contractor, subcontractor or prospective subcontractor which are related to the cost or pricing data, and a State contract, including subcontracts, other than a firm fixed-price contract. The Contractor and subcontractor(s) shall maintain the books and records for a period of four (4) years from the date of final payment under the Contract.

7.37.2 The Contractor shall ensure that its subcontractors comply with this requirement and shall bear all costs (including attorney's fees) of enforcement in the event of its subcontractor's failure or refusal to fully cooperate.

7.37.3 Additionally, Sections 231-7, 235-108, 237-39 and other HRS chapters through reference, authorize the Department of Taxation to audit all taxpayers conducting business within the State. Contractors

must make available to the Department of Taxation all books and records necessary to verify compliance with the tax laws.

7.38 RECORDS MAINTENANCE, RETENTION AND ACCESS

7.38.1 The Contractor and any subcontractor whose contract for services is valued at $25,000 (twenty five thousand) or more shall, in accordance with generally acceptable accounting practices, maintain fiscal records and supporting documents and related files, papers, and reports that adequately reflect all direct and indirect expenditures and management and fiscal practices related to the Contractor and subcontractor's performance of services under this Contract.

7.38.2 The representative of the Department, the Chairman, the Attorney General, (the Federal granting agency, the Comptroller General of the United States, and any of their authorized representatives when federal funds are utilized), and the Legislative Auditor of the State of Hawaii shall have the right of access to any book, document, paper, file, or other record of the Contractor and any subcontractor that is related to the performance of services under this Contract in order to conduct an audit or other examination and /or to make copies, excerpts and transcripts for the purposes of monitoring and evaluating the Contractor and subcontractor's performance of services and the Contractor and subcontractor's program, management, and fiscal practices to assure the proper and effective expenditure of funds and to verify all costs associated with any claims made under this Contract.

7.38.3 The right of access shall not be limited to the required retention period but shall last as long as the records are retained. The Contractor and subcontractor shall maintain and retain all books and records related to the Contractor and subcontractor's performance of services under this Contract, including any cost or pricing data for three (3) years from the date of final payment, except that if any litigation, claim, negotiation, investigation, audit or other action involving the books and records has been started before the expiration of the three (3) year period, the Contractor and subcontractors shall retain the books and records until completion of the action and resolution of all issues that arise from it, or until the end of the three (3) year retention period, whichever occurs later. Furthermore, it shall be the Contractor's responsibility to enforce compliance with this provision by any subcontractor.

7.39 COST OR PRICING DATA. Cost or pricing data must be submitted to the Agency purchasing officer and timely certified as accurate for contracts over $100,000 unless the contract is for a multiple-term or as otherwise specified by the procurement officer. Unless otherwise required by the Agency procurement officer, cost or pricing data submission is not required for Contracts awarded pursuant to competitive sealed bid procedures. If certified cost or pricing data are subsequently found to have been inaccurate, incomplete, or noncurrent as of the date stated in the certificate, the STATE is entitled to an adjustment of the contract price, including profit or fee, to exclude any significant sum by which the price, including profit or fee, was increased because of the defective data. It is presumed that overstated cost or pricing data increased the contract price in the amount of the defect plus related overhead and profit or fee. Therefore, unless there is a clear indication that the defective data was not used or relied upon, the price will be reduced in such amount.

7.39.1 AUDIT OF COST OR PRICING DATA. When cost or pricing principles are applicable, the STATE may require an audit of cost or pricing data.

7.40 CONFIDENTIALITY OF MATERIAL

7.40.1 All material given to or made available to the CONTRACTOR by virtue of this Contract, which is identified as proprietary or confidential information, will be safeguarded by the CONTRACTOR and

shall not be disclosed to any individual or organization without the prior written approval of the STATE.

7.40.2 All information, data, or other material provided by the CONTRACTOR to the STATE shall be subject to the Uniform Information Practices Act, chapter 92F, HRS.

7.41 PUBLICITY. The CONTRACTOR shall not refer to the STATE, or any office, agency, or officer thereof, or any State employee, including the head of the purchasing agency, the Chief Procurement Officer, the Director, the Agency procurement officer, or to the services or goods, or both, provided under this Contract, in any of the CONTRACTOR's brochures, advertisements, or other publicity of the CONTRACTOR. All media contacts with the CONTRACTOR about the subject matter of this Contract shall be referred to the Agency procurement officer.

7.42 OWNERSHIP RIGHTS AND COPYRIGHT. The STATE shall have complete ownership of all material, both finished and unfinished which is developed, prepared, assembled, or conceived by the CONTRACTOR pursuant to this Contract, and all such material shall be considered "works made for hire." All such material shall be delivered to the STATE upon expiration or termination of this Contract. The STATE, in its sole discretion, shall have the exclusive right to copyright any product, concept, or material developed, prepared, assembled, or conceived by the CONTRACTOR pursuant to this Contract.

7.43 GOVERNING LAW. The validity of this Contract and any of its terms or provisions, as well as the rights and duties of the parties to this Contract, shall be governed by the laws of the State of Hawaii. Any action at law or in equity to enforce or interpret the provisions of this Contract shall be brought in a state court of competent jurisdiction in Honolulu, Hawaii.

7.44 SEVERABILITY. In the event that a court declares any provision of this Contract invalid or unenforceable, such invalidity or unenforceability shall not affect the validity or enforceability of the remaining terms of this Contract.

7.45 WAIVER. The failure of the STATE to insist upon the strict compliance with any term, provision, or condition of this Contract, shall not constitute or be deemed to constitute a waiver or relinquishment of the STATE's right to enforce the same in accordance with this Contract. The fact that the STATE specifically refers to one provision of the Procurement Rules or one section of the Hawaii Revised Statutes, and does not include other provisions or statutory sections in this Contract shall not constitute a waiver or relinquishment of the STATE's rights or the CONTRACTOR's obligations under the Procurement Rules or statutes.

7.46 UTILITIES AND SERVICES

7.46.1 Where its operations are next to or near properties of utility companies or other property, the CONTRACTOR shall not start work until the CONTRACTOR makes arrangements necessary for the protection of said property.

7.46.2 The CONTRACTOR shall cooperate, coordinate and schedule its work to suit the owners of underground or overhead utility lines or other property in removing or altering such lines or providing new services in order for the work to progress according to the contract. Cooperation includes rearranging the CONTRACTOR's operations and normal work schedules and realignment of work as approved by the Department in order to accommodate the operations and work of the utilities and/or other property in and around the work site at no additional cost to the Department.

7.46.3 The CONTRACTOR shall contact all the various utility companies before the start of the work to ascertain any existing utilities and to develop a full understanding of the utility requirements with respect to this project. The CONTRACTOR shall furnish the Project Manager with evidence that the CONTRACTOR has contacted the utility companies.

7.46.4 If the CONTRACTOR discovers that the existence and location of utilities in the contract plans are not correct, the CONTRACTOR shall not disturb the utilities and immediately notify the Project Manager. The Project Manager will advise the CONTRACTOR regarding actions to take.

7.46.5 The CONTRACTOR shall ascertain the exact location and depth of utilities within the project area. The CONTRACTOR shall mark such locations to warn workers or equipment operators of their existence and location. The CONTRACTOR shall be responsible to acquaint personnel working near utilities with the type, size, location and depth of the utilities and the consequences that might result from disturbances. The CONTRACTOR shall not start trenching or start similar operations until the CONTRACTOR has taken reasonable and appropriate precautions to protect the utilities.

7.46.6 Any utilities or other property that the CONTRACTOR encounters during the progress of the work, such as telephone ducts, electric ducts, water lines, sewer lines, electric lines and drainage pipes, whether shown or not on the contract plans, shall not be disturbed or damaged unless otherwise instructed in the plans and specifications.

7.46.7 In the event the utilities or other property are damaged or disturbed by the CONTRACTOR, the CONTRACTOR shall be liable for all such damage where the utilities or other property are:

(a) Shown on the plan in its actual or approximate location; or
(b) Exposed on the job as it progresses; or
(c) Pointed out to the CONTRACTOR in the field.

7.46.8 Such utilities or other property as described above shall be "known utilities or other property." If the CONTRACTOR encounters an unknown utility or other property, it shall not proceed until it has notified the Project Manager and receives instructions. If the Project Manager directs additional work, it shall be paid for under Section 4.2, CHANGES.

7.46.9 The CONTRACTOR shall repair and restore to pre-damaged condition any utilities or any other property it may damage, and it shall be liable for any and all resulting damage at no cost to the Department, the work or utility owner or property owner. Any damage claim due to the disruption of service caused by the utilities being damaged shall be paid by the CONTRACTOR who shall defend, indemnify and hold harmless the Department from all suits, actions or claims of any character brought on account of such damages, whether or not the Department may have been partially at fault. Public liability and property damage insurance to be obtained by the CONTRACTOR pursuant to Section 7.3 INSURANCE REQUIREMENTS shall cover such risk of damage.

7.46.10 In the event the CONTRACTOR simultaneously with the discovery of an unknown utility or other property damages that utility or other property, the CONTRACTOR shall not be held liable beyond the extent of the CONTRACTOR's liability insurance but shall immediately notify the Project Manager. Upon instruction from the Project Manager, the CONTRACTOR shall repair all damages and execute a plan for dealing with the damaged utility or other property. This repair work shall be considered additional work as covered in Section 4.2, CHANGES.

~END OF ARTICLE 7~

ARTICLE 8: MEASUREMENT AND PAYMENT

8.1 MEASUREMENT OF QUANTITIES

8.1.1 All work completed under the Contract shall be measured by the Project Manager according to United States standard measures, or as stated in this Contract. The method of measurement and computations to be used in determination of quantities of material furnished and of work performed under the contract shall conform to good Managing practice. These measurements shall be considered correct and final unless the Contractor has protested same to the Project Manager and has demonstrated the existence of an error by actual physical measurement before the work has progressed in a manner, which would prohibit a proper check.

8.1.2 All measurements of the area of the various surfaces, pavement and base courses will be made in the horizontal projection of the actual surface and no deductions will be made for fixtures or structures having an area of nine (9) square feet or less. All measurements of headers, curbs, fences and any other type of construction which is to be paid for by its length will be made in the horizontal projection of the actual driven length from toe to top of cutoff, and for piles, which will be by actual length. All materials which are specified for measurement by the cubic yard "Loose Measurement" or "Measured in the Vehicle" shall be hauled in approved vehicles and measured therein at the point of delivery. Approved vehicles for this purpose may be of any type or size satisfactory to the Project Manager, provided that the body is of such type that the actual contents may be readily and accurately determined. Unless all approved vehicles on a job are of a uniform capacity each approved vehicle must bear a plainly legible identification mark indicating the specific approved capacity. The Inspector may reject all loads not hauled in such approved vehicles.

8.2 NO WAIVER OF LEGAL RIGHTS. The Project Manager shall not be precluded or estopped by any measurements, estimate or certificate made either before or after the completion and acceptance of the work and payment therefor, from showing the true amount and character of the work performed and materials furnished by the Contractor, or from showing that any such measurement estimate or certificate is untrue or incorrectly made, or rejecting the work or materials that do not conform in fact to the contract. The Project Manager shall not be precluded or estopped, notwithstanding any such measurement, estimate, or certificate and payment in accordance therewith, from recovering from the Contractor and its sureties such damages as the Department may sustain by reason of the Contractor's failure to comply with the terms of the Contract. Neither the acceptance by the Project Manager or any representative of the Project Manager, nor any payment for or acceptance of the whole or any part of the work, nor any extension of time, or any possession taken by the Project Manager, shall operate as a waiver of any portion of the contract, or of any power herein reserved, or any right to damage herein provided. A waiver of any notice requirement or breach of the contract shall not be held to be a waiver of any other notice requirement or subsequent breach.

8.3 PAYMENT FOR ADDITIONAL WORK

8.3.1 Additional work as defined in Section 4.2, CHANGES, when ordered, shall be paid for as defined in Section 4.4, PRICE ADJUSTMENT by a duly issued change order in accordance with the terms provided therein.

8.3.2 On credit proposals and proposals covering both increases and decreases, the application of overhead and profit shall be on the net change in direct costs for the performance of the work.

8.3.3 When payment is to be made for additional work directed by a Field Order, the total price adjustment as specified in the Field Order or if not specified therein for the work contained in the related change

order shall be considered full compensation for all materials, labor, insurance, taxes, equipment use or rental and overheads, both field and home office including extended home and branch office overhead and other related delay impact costs.

8.3.4 FORCE ACCOUNT METHOD. When, for the convenience of the Department, payment is to be made by the Force Account method, all work performed or labor and materials and equipment furnished shall be paid for as described below. Payment by the Force Account method will not alter any rights, duties and obligations under the contract.

8.3.4.1 LABOR. For all hourly workers, the Contractor will receive the rate of wage including fringe benefits when such amounts are required by collective bargaining agreement or other employment contract generally applicable to the classes of labor employed on the work, which shall be agreed upon in writing before beginning work for each and every hour that said labor is actually engaged in said work.

(a) All markups for overhead and profit shall be added subject to limitations established in Section 4.5, ALLOWANCES FOR OVERHEAD AND PROFIT.

(b) No allowance for overtime compensation will be given without the written approval of the Project Manager prior to performance of such work.

8.3.4.2 INSURANCE AND TAXES. The Contractor and subcontractor(s) will also receive the actual additional costs paid for property damage, liability, worker's compensation insurance premiums, State unemployment contributions, Federal unemployment taxes, social security and Medicare taxes.

8.3.4.3 MATERIALS. For materials accepted by the Project Manager and used, the Contractor and subcontractor(s) shall receive the actual cost of such materials delivered and incorporated into work, plus a markup allowed under Section 4.5, ALLOWANCES FOR OVERHEAD AND PROFIT.

8.3.4.4 SUBCONTRACTORS. Subcontractor costs shall be the actual costs of the subcontractor marked up as defined in this Section 8.3, PAYMENT FOR ADDITIONAL WORK plus a markup allowed under Section 4.5, ALLOWANCES FOR OVERHEAD AND PROFIT.

8.3.4.5 EQUIPMENT

(a) For machinery or special equipment (other than small tools as herein defined in Subsection 8.3.4.5.(h) owned or leased by the Contractor or a related entity, the use of which has been authorized by the Project Manager:

(1) The Contractor will be paid at the per-hour rental rates based on the monthly rate established for said machinery or equipment in the then-current edition of the Rental Rate Blue Book for Construction Equipment including the estimated operating cost per hour and regional correction provided therein.

(2) If no rate is listed for a particular kind, type or size of machinery or equipment, then the monthly, hourly rates shall be as agreed upon in writing by the Contractor and the Project Manager prior to the use of said machinery or equipment. If there is no agreement, the Project Manager will set a rate. The Contractor may contest the rate pursuant to Section 7.25, DISPUTES AND CLAIMS.

(3) Rental rates which are higher than those specified in the aforesaid Rental Rate Blue Book publication may be allowed where such higher rates can be justified by job conditions such as work in water and work on lava, etc. Request for such higher rates shall be submitted in writing to the Project Manager for approval prior to the use of the machinery or equipment in question.

(b) For machinery or special equipment [other than small tools as herein defined in clause 8.3.4.5 (h)] rented by the Contractor or a related entity specifically for the Force Account work, the use of which has been authorized by the Project Manager, the Contractor will be paid the actual rental cost for the machinery or equipment, including mobilization and demobilization costs. A receipt from the equipment supplier shall be submitted to the Project Manager.

(c) For machinery or special equipment [other than small tools as herein defined in clause 8.3.4.5 (h)] rented by the Contractor or a related entity for use in the project, but which will also be used for the Force Account work, the use of which has been authorized by the Project Manager, the Contractor will be paid the actual rental cost for the machinery or equipment. No additional mobilization and demobilization costs will be paid. A receipt from the equipment supplier shall be submitted to the Project Manager.

(d) The rental rate for trucks not owned by the Contractor shall be those as established under the Hawaii State Public Utilities Commission, which will be paid for as an equipment item pursuant to Subsection 8.3.4.5, EQUIPMENT. Rental rates for Contractor owned trucks not listed in the Rental Rate Blue Book shall be agreed upon in writing by the Contractor and Project Manager prior to the use of said trucks. If there is no agreement, the Project Manager shall set the rate. The Contractor may contest the rate pursuant to Section 7.25, DISPUTES AND CLAIMS.

(e) The rental period shall begin at the time equipment reaches the site of work, shall include each day that the machinery or equipment is at the site of the work and shall terminate at the end of the day on which the equipment is no longer needed. In the event the equipment must standby due to work being delayed or halted by reason of design, traffic, or other related problems uncontrollable by the Contractor, excluding Saturdays, Sundays and Legal Holidays, unless the equipment is used to perform work on such days, the rental shall be two (2) hours per day until the equipment is no longer needed.

(1) The rental time to be paid will be for the time actually used. The Project Manager prior to the performance of such work must approve any hours or operation in excess of eight (8) hours in any one (1) day.
(2) Rental time will not be allowed or credited for any day on which machinery or equipment is inoperative due to its breakdown. On such days, the Contractor will be paid only for the actual hours, if any, that the machinery or equipment was in operation.
(3) In the event the Force Account work is completed in less than eight (8) hours, equipment rental shall nevertheless be paid for a minimum eight (8) hours.
(4) For the purpose of determining the rental period the continuous and consecutive days shall be the normal eight (8) hour shift work day, Monday through Friday excluding legal holidays. Any work day to be paid less than eight (8) hours shall not be considered as continuous, except for equipment removed from rental for fuel and lubrication.
(5) No additional premium beyond the normal rates used will be paid for equipment over eight (8) hours per day or forty (40) hours per week.

(f) All rental rates for machinery and equipment shall include the cost of fuel, oil, lubricants, supplies, small tools, necessary attachments, repairs, maintenance, tire wear, depreciation, storage, and all other incidentals.

(g) All machinery and equipment shall be in good working condition and suitable for the purpose for which the machinery and equipment is to be used.

(h) Individual pieces of equipment or tools having a replacement value of $2,000 (two thousand dollars) or less, whether or not consumed by use, shall be considered to be small tools and included in the allowed markup for overhead and profit and no separate payment will be made therefor.

(i) The total of all Force Account rental charges accrued over the duration of the contract for a specific item of equipment shall not exceed the replacement cost of that equipment.

(1) The Contractor shall provide the cost of replacement to the Project Manager prior to using the equipment. If the Project Manager does not agree with the replacement cost, the Project Manager shall set the replacement cost. The Contractor may contest the replacement cost pursuant to Section 7.25, DISPUTES AND CLAIMS.

(j) Should the item of equipment be rented from an unrelated entity, the rental cost will be treated as equipment cost under Subsection 8.3.4.5, EQUIPMENT.

(k) Transportation and/or Mobilization: The following provisions shall govern in determining the compensation to be paid to the Contractor for use of equipment or machinery on the Force Account method:

(1) The Project Manager shall approve the location from which the equipment is to be moved or transported.

(2) Where the equipment must be transported to the site of the Force Account work, the Department will pay the reasonable cost of mobilizing and transporting the equipment, including its loading and unloading, from its original location to the site of Force Account work. Upon completion of the work the Department will pay the reasonable cost of mobilizing and transporting the equipment back to its original location or to another location, whichever cost is less.

(3) The cost of transporting the equipment shall not exceed the rates established by the Hawaii State Public Utilities Commission. If such rates are nonexistent, then the rates will be determined by the Project Manager based upon the prevailing rates charged by established haulers within the locale.

(4) Where the equipment is self-propelled, the Department will pay the cost of moving the equipment by its own power from its original location to the site of the Force Account work. Upon completion of the work the Department will pay the reasonable cost of moving of the Equipment back to its original or another location, whichever cost is less.

(5) At the discretion of the Project Manager, when the Contractor desires to use such equipment for other than Force Account work, the costs of mobilization and transportation shall be prorated between the Force Account and non- Force Account work.

(l) Pickup trucks, vans, storage trailers, unless specifically rented for the Force Account work, shall be considered incidental to the Force Account work and the costs therefor are included in the markup allowed under Section 4.5, ALLOWANCES FOR OVERHEAD AND PROFIT.

8.3.4.6 STATE EXCISE (GROSS INCOME) TAX AND BOND. A sum equal to the current percentage rate for the State excise (Gross Income) tax on the total sum determined in Subsections 8.3.4.1, 8.3.4.2, 8.3.4.3 and 8.3.4.4 above, and the bond premium shall be added as compensation to the Contractor. The actual bond premium not to exceed one percent (1%) shall be added to items covered by Subsections 8.3.4.1, 8.3.4.2, 8.3.4.3 and 8.3.4.4 when applicable.

(a) The compensation as determined in Subsections 8.3.4.1, 8.3.4.2, 8.3.4.3, 8.3.4.4 and 8.3.4.5 above shall be deemed to be payment in full for work paid on a Force Account basis.

8.3.4.7 RECORDS. The Contractor and the Project Manager shall compare records of the labor, materials and equipment rentals paid by the Force Account basis at the end of each day. These daily records, if signed by both parties, shall thereafter be the basis for the quantities to be paid for by the Force Account method. The Contractor shall not be entitled to payment for Force Account records not signed by the Project Manager.

8.3.4.8 STATEMENTS. No payment will be made for work on a Force Account basis until the Contractor has submitted to the Project Manager, duplicate itemized statements of the cost of such Force Account work detailed as follows:

(a) Laborers. Name, classification, date, daily hours, total hours, rate, and extension for each laborer and foreman and also the amount of fringe benefits payable if any.

(b) Equipment. Designation, dates, daily hours, total hours, rental rate, and extension for each unit of machinery and equipment.

(c) Materials:

(1) Quantities of materials, prices and extensions.

(2) Costs of transporting materials, if such cost is not reflected in the prices of the materials.

(3) Statements shall be accompanied and supported by receipted invoices for all materials used and transportation charges. However, if materials used on the Force Account work are not specifically purchased for such work but are taken from the Contractor's stock, then in lieu of the invoices the Contractors shall submit an affidavit certifying that such materials were taken from stock and that the amount claimed represents the actual cost to the Contractor.

(d) Insurance. Cost of property damage, liability and worker's compensation insurance premiums, unemployment insurance contributions, and social security tax.

8.4 PROGRESS AND/OR PARTIAL PAYMENTS

8.4.1 PROGRESS PAYMENTS. The Contractor will be allowed progress payments on a monthly basis upon preparing the Monthly Payment Application forms and submitting the originals to the Project Manager. The monthly payment shall be based on the items of work satisfactorily completed and the value thereof at unit prices and/or lump sum prices set forth in the contract as determined by the Project Manager and will be subject to compliance with Section 7.9, PAYROLLS AND PAYROLL RECORDS.

8.4.1.1 ORIGINAL INVOICES REQUIRED. All payments under this Contract shall be made only upon submission by the CONTRACTOR of original invoices specifying the amount due and certifying that services requested under the Contract have been performed by the CONTRACTOR according to the Contract.

8.4.1.2 SUBJECT TO AVAILABLE FUNDS. Such payments are subject to availability of funds and allotment by the Director of Finance in accordance with chapter 37, HRS. Further, all payments shall be made in accordance with and subject to chapter 40, HRS.

8.4.2 In the event the Contractor or any Subcontractor fails to submit certified copies of payrolls in accordance with the requirements of Section 7.9, PAYROLLS AND PAYROLL RECORDS, the Project Manager may retain the amount due for items of work for which payroll affidavits have not been submitted on a timely basis notwithstanding satisfactory completion of the work until such records have been duly submitted. The Contractor shall not be due any interest payment for any amount thus withheld.

8.4.3 PARTIAL PAYMENT FOR MATERIALS. The Contractor will also be allowed partial payments to the extent of ninety percent (90%) of the manufacturer's, supplier's, distributor's or fabricator's invoice cost of accepted materials to be incorporated in the work on the following conditions:

8.4.3.1 The materials are delivered and properly stored at the site of the work; or

8.4.3.2 For special items of materials accepted by the Project Manager, the materials are delivered to the Contractor or subcontractor(s) and properly stored in an acceptable location within a reasonable distance to the site of the work.

8.4.4 Partial payments shall be made only if the Project Manager finds that:

8.4.4.1 The Contractor has submitted bills of sale for the materials or otherwise demonstrates clear title to such materials.

8.4.4.2 The materials are insured for their full replacement value to the benefit of the Department against theft, fire, damages incurred in transportation to the site, and other hazards.

8.4.4.3 The materials are not subject to deterioration.

8.4.4.4 In case of materials stored off the project site, the materials are not commingled with other materials not to be incorporated into the project.

8.4.5 FEDERAL FUNDS. If this Contract is payable in whole or in part from federal funds, Contractor agrees that, as to the portion of the compensation under this Contract to be payable from federal funds, the Contractor shall be paid only from such funds received from the federal government, and shall not be paid from any other funds.

8.4.6 Final Payment Requirements (§3-122-112, HAR). Upon receipt of the Contractor's invoice for final payment, the Department shall verify compliance with Section 103D-328 HRS via Hawaii Compliance Express (HCE).

8.5 PROMPT PAYMENT (§3-125-23 HAR)

8.5.1 Any money, other than retainage, paid to the CONTRACTOR shall be dispersed to subcontractors within ten days after receipt of the money in accordance with the terms of the subcontract; provided that the subcontractor has met all the terms and conditions of the subcontract and there are no bona fide disputes; and

8.5.2 BONA FIDE DISPUTES. The existence of a bona fide dispute with a subcontractor or material supplier shall not release the Contractor of its prompt payment obligations as to all sums due that are not directly affected by such dispute.

8.5.3 FILING NON-PAYMENT COMPLAINT. Subcontractors and material suppliers may file in writing a complaint with the Chairman regarding non-payment by the Contractor. Such complaint shall include:

8.5.3.1 The amount past due for work performed and already paid for by the Department;

8.5.3.2 That all the terms, conditions or requirements of its subcontract have been met; and

8.5.3.3 That no bona fide dispute over its performance exists. The Department will investigate the validity of the complaint.

8.5.4 The Department may withhold from future progress payments amounts to cover any sums paid to the Contractor for work performed by a subcontractor if the Department finds that the subcontractor complaint regarding non-payment by the Contractor has merit.

8.5.5 If the Project Manager determines that the Contractor failed to make prompt payment required to a subcontractor or material supplier with whom it has no bona fide dispute, the Project Manager shall inform the Contractor of the findings and request the Contractor make payment accordingly. If the Contractor does not act promptly, the Project Manager shall take appropriate action as allowed under this Contract and/or refer the matter to the Contractor Licensing Board for appropriate action under Section 444-17, Hawaii Revised Statutes regarding the Revocation, Suspension and Renewal of (Contractor) Licenses and/or initiate a petition for debarment of the Contractor from bidding on other Department jobs.

8.6 RETAINAGE

8.6.1 The Department will retain five percent (5%) of the total amount of progress and / or partial payments until after completion of the entire Contract in an acceptable manner at which time this balance, less any previous payments, will be certified and paid to the Contractor. After fifty percent (50%) of the work is completed and progress is satisfactory, no additional sum will be withheld. If progress is not satisfactory, the Department may continue to withhold retainage sums not exceeding five percent (5%) of the amount due the Contractor.

8.6.1.1 Contractor may withhold from amounts due its subcontractors, only the same percentage of retainage as that of the Contractor, and only if its subcontractors have provided valid performance and payments bonds or other bond or collateral acceptable to the Contractor.

8.6.1.2 Contractor or Subcontractor may negotiate with, and retain from its respective subcontractors, a different retainage percentage which cannot exceed ten percent (10%).

8.6.2 The retainage shall not include sums deducted as liquidated damages from monies due or that may become due the Contractor under the Contract.

8.7 WARRANTY OF CLEAR TITLE. The Contractor warrants and guarantees that all work and materials covered by progress or partial payments made thereon shall be free and clear of all liens, claims, security interests or encumbrances, and shall become the sole property of the Department. This provision shall not, however, be construed as an acceptance of the work nor shall it be construed as relieving the Contractor from the sole responsibility for all materials and work upon which payments have been made or the restoration of any damaged work, or as waiving the right of the Department to require the fulfillment of all the items of the Contract.

8.7.1 LIENS AND WARRANTIES. Goods provided under this Contract shall be provided free of all liens and provided together with all applicable warranties, or with the warranties described in the Contract documents, whichever are greater.

8.8 FINAL PAYMENT

8.8.1 Upon final payment to the CONTRACTOR, full payment to the subcontractor, including retainage, shall be made within ten days after receipt of the money; provided that there are no bona fine disputes over the subcontractor's performance under the subcontract.

8.8.2 Sums necessary to meet any claims of any kind by the Department may be retained from the sums due the Contractor until said claims have been fully and completely discharged or otherwise satisfied.

8.9 STATE'S RIGHT TO OFFSET. The STATE may offset against any monies or other obligations the STATE owes to the CONTRACTOR under this Contract, any amounts owed to the State of Hawaii by the CONTRACTOR under this Contract or any other Contracts or pursuant to any law or other obligation owed to the State of Hawaii by the CONTRACTOR, including, without limitation, the payment of any taxes or levies of any kind or nature. The STATE will notify the CONTRACTOR in writing of any offset and the nature of such offset. For purposes of this Subsection, amounts owed to the State of Hawaii shall not include debts or obligations which have been liquidated, agreed to by the CONTRACTOR, and are covered by an installment payment or other settlement plan approved by the State of Hawaii, provided, however, that the CONTRACTOR shall be entitled to such exclusion only to the extent that the CONTRACTOR is current with, and not delinquent on, any payments or obligations owed to the State of Hawaii under such payment or other settlement plan.

~END OF ARTICLE 8~

STATE OF HAWAII

SPECIAL CONDITIONS

Project: **Scattered Lot Improvements for Five (5) Keaukaha Lots in Tract 1**
Location: **Waiakea, South Hilo, County of Hawaii, State of Hawaii**
Contractor: **TBD**

SC-01 INTERCHANGEABLE TERMS

The following terms are one and the same:

a. "Contract" and "Agreement".
b. "Department of Hawaiian Home Lands" "Department" "DHHL" and "STATE".

SC-02 INSURANCE COVERAGE

The CONTRACTOR shall obtain separate insurance coverage for this project that complies with the requirements set forth in the DHHL Construction General Conditions, Article 7, Section 7.3, as amended. Payment for all work required to comply with this item will not be paid for separately but shall be considered incidental to the various contract items.

CONTRACTOR shall maintain insurance acceptable to the STATE in full force and effect throughout the term of this Contract. The policies of insurance maintained by CONTRACTOR shall provide the following minimum coverage:

Coverage	Limit
General Liability Insurance (occurrence form)	Bodily Injury and Property Damage (combined single limit): $1,000,000 per occurrence and $2,000,000 aggregate Personal Injury: $1,000,000 per occurrence and $2,000,000 aggregate
Automobile Insurance (covering all owned, non-owned and hired automobiles)	Bodily Injury: $1,000,000 per person and $1,000,000 per occurrence. Property Damage: $1,000,000 per accident or combined single limit of $2,000,000.
Workers Compensation (statutory limit is required by laws of the State of Hawaii)	Insurance to include Employer's Liability. Both such coverages shall apply to all employees of the CONTRACTOR and, in case any sub-contractor fails to provide adequate similar protection for all his employees, to all employees of subcontractors.
Builder's Risk covering the CONTRACTOR and all subcontractors	100% Replacement Value
Fire and extended coverage	100% Replacement Value
Malicious Mischief	100% Replacement Value

STATE OF HAWAII

SPECIAL CONDITIONS

Flood Insurance, if applicable Maximum Coverage available

a. The State of Hawaii, Department of Hawaiian Home Lands, its elected and appointed officials, officers, employees, and agents shall be named as additional insured with respect to operations, services or products provided to the State of Hawaii. CONTRACTOR agrees to provide to the DHHL, before the effective date of the Contract, certificate(s) of insurance necessary to evidence compliance with insurance provisions of this Contract. CONTRACTOR shall keep such insurance in effect and the certificate(s) on deposit with DHHL during the entire term of this Contract. Upon request by the STATE, CONTRACTOR shall furnish a copy of the policy or policies.

b. Failure of CONTRACTOR to provide and keep in force such insurance shall be regarded as a material default under this Contract. The STATE shall be entitled to exercise any or all of the remedies provided in this Contract for default of CONTRACTOR.

c. The procuring of such required policy or policies of insurance shall not be construed to limit CONTRACTOR's liability under this Contract or to fulfill the indemnification provisions and requirements of this Contract. Notwithstanding said policy or policies of insurance, CONTRACTOR shall be obliged for the full and total amount of any damage, injury, or loss caused by negligence or neglect connected with this Contract.

d. CONTRACTOR shall immediately provide written notice to the contracting department or agency should any of the insurance policies evidenced on its Certificate of Insurance form be cancelled, limited in scope, or not renewed upon expiration.

e. DHHL is a self insured State agency. CONTRACTOR's insurance shall be primary. Any insurance maintained by the State of Hawaii shall apply in excess of, and shall not contribute with, insurance provided by CONTRACTOR.

f. The CONTRACTOR shall require all subcontractors to have in full force and effect the same insurance coverage as required of the CONTRACTOR. Such insurance shall name the State of Hawaii, Department of Hawaiian Home Lands, its elected and appointed officials, officers, employees, and agents as additional insured with respect to operations, services or products provided to the State of Hawaii. The CONTRACTOR shall be responsible to enforce its subcontractors' compliance with these insurance requirements and CONTRACTOR shall, upon request, provide the STATE a copy of the policy or policies of insurance for any subcontractor.

SC-03 COMPLETION SCHEDULE AND LIQUIDATED DAMAGES

The CONTRACTOR shall complete all work as specified or indicated in the Contract Documents on or before ONE HUNDRED TWENTY (120) consecutive calendar days after receiving written Notice to Proceed, subject to extensions, as may be granted.

In case of failure on the part of the CONTRACTOR to complete the work within the time specified, the CONTRACTOR shall pay to DHHL as liquidated damages, and not as a

penalty, $200.00 per calendar day for each day that the project, in its entirety, remains incomplete.

SC-04 PROCESS THROUGH DHHL

Any and all submittals, reports, requests, claims and notices under the contract shall be processed through Land Development Division Project Manager, at Hale Kalanianaole, 91-5420 Kapolei Parkway, Kapolei, Hawaii 96707.

SC-05 SURVEYING SERVICES

Any surveying services required shall be the responsibility of the contractor and considered incidental to the scope of work under this contract and therefore covered under the terms of this contract. No separate payment shall be made.

Upon completion, the Contractor shall prepare an as-built plan for the project site in which the finished grades are certified by a Registered Land Surveyor. Six (6) copies of the as-built plan shall be submitted to the Construction Manager and Engineer. The cost of the as-built plan shall be incidental to the contract. No separate payment shall be made.

SC-06 ALLOWANCES

The proposal may contain payment items designated as allowances. Funds listed in allowance items are to be spent at the direction of DHHL. The allowance is an estimate only and is subject to increase or decrease depending on the actual cost of the item. The funds are for the direct costs of an item and all pricing, submittal and review, overhead, installation, profit, insurance, surety, processing of the issuance of checks for payment to other parties, and all other costs will be included. No payment will be made for incidental costs.

Allowances specifically set aside for construction work and materials will be negotiated when the scope of work is determined. Any unspent allowance costs will be deducted from the contract by change order prior to final payment.

SC-07 PERMITS AND FEES

Contractor shall apply and pay for all permits and inspection fees as required by all governmental agencies having jurisdiction over this project.

SC-08 COORDINATION WITH OTHER PARTIES

The CONTRACTOR shall coordinate all the necessary work for temporary utility services, permanent service and appurtenances with the appropriate agencies, including but not limited to the County of Hawaii, Department of Planning and Permitting.

SC-09 CONTRACTOR'S LICENSING

STATE OF HAWAII

SPECIAL CONDITIONS

It is the CONTRACTOR's sole responsibility to review the requirements of this project and determine the appropriate contractor's licenses that are required to complete the project. If the CONTRACTOR does not hold all of the licenses required to perform a particular item of work on this project with its own workers, when bidding, he must list subcontractors that hold the appropriate licenses in its proposal.

SC-10 WATER CHARGES AND REQUIREMENTS

The CONTRACTOR shall be solely responsible for obtaining water to meet any requirements of the contract. Unless otherwise indicated or provided for, any work, costs, charges and fees necessary to obtain water for this contract shall not be paid for separately but shall be considered incidental to the various contract items; no separate or additional payment will be made therefore.

SC-11 SOIL AND DUST CONTROL

To control the dust during construction, the CONTRACTOR shall have an adequate supply of water for dust control and if necessary, moisture conditioning of fill material at all times. The CONTRACTOR shall institute an erosion control program and dust control program to minimize soil erosion and wind erosion and airborne fugitive dust nuisance, respectively for the entire duration of this project.

SC-12 FINAL INSPECTION

Throughout the construction period, the work may be subject to periodic inspection by the Department, designated Construction Inspector, the County of Hawaii, Department of Planning and Permitting, and other applicable government agencies. Once work has been satisfactorily completed, the County, accompanied by the Department and Construction Inspector, will make the final inspection of the work to determine whether all work has been done in complete compliance with the requirements of the plans and these specifications.

The CONTRACTOR shall therefore schedule the final inspection with the County of Hawaii, Department of Planning and Permitting and notify the Department's Project Manager one week prior to said inspection.

Neither the scheduling nor the conduct of the aforementioned final inspection shall be deemed a waiver of the Department's right to subsequently require CONTRACTOR to complete all unfinished or defective work to the satisfaction of the Department.

SC-13 GENERAL CONDITIONS

In the event of conflicts and/or discrepancies, the DHHL Construction General Conditions shall govern over Form AG-008, 103D General Conditions (eff. 10/17/13)

STATE OF HAWAII

SPECIAL CONDITIONS

SC-14 CAMPAIGN CONTRIBUTIONS BY STATE AND COUNTY CONTRACTORS

Contractors are hereby notified of the applicability of Section 11-355, HRS, which states that campaign contributions from specified State or County government contractors during the term of the contract if the contractors are paid with funds appropriated by a legislative body.

SC-15 EXTRA AND FORCE ACCOUNT WORK

109.04 Extra and Force Account Work (Hawaii Standard Specifications for Road and Bridges Construction 2005, Also see Addendum)

Force Account Provisions and Compensation. The contract documents may provide that certain work be compensated by force account method, or the Contractor may be directed to provide changes compensable under the price adjustment provision of paragraph (5) of Subsection 104.09 – Methods of Price Adjustment. When performing force account work, the Contractor and its subcontractor(s) shall comply with the provisions of this section. Compensation by force account will not alter any rights, duties, and obligations under the contract. The Contractor shall follow these procedures:

(A) The Contractor's Duties; Engineer's Authority. The Contractor has the duty to perform the work payable under this provision efficiently and economically. When the Engineer determines the Contractor is working inefficiently or uneconomically, the Engineer may direct the Contractor to stop, modify its means and methods, or the Engineer may specifically direct means and methods of doing the force account work. The Engineer will not pay for work that is unacceptable or for the cost of correcting work that fails to conform to contract requirements.

(B) Records. The Contractor shall maintain accurate daily records of all allowable costs. The records, as well as all work and costs are subject to review, audit, and approval by the Engineer.

The Contractor shall use the State's Force Account Form and obtain the Inspector's signature thereon each day the Contractor performs force account work. As the condition of payment of the force account work, the Contractor shall submit any original and two copies of the force account records, together with invoices, receipts and other backup data to the Engineer.

(C) Allowable Costs. Allowable cost include labor, equipment and machinery, trucks, insurance, taxes and bonds, overhead, profit, and reimbursable expenses all as described herein. Other costs or items not covered under this section are subject to the Engineer's written approval.

(D) Labor. Allowable cost include Contractor and subcontractor(s) costs for hourly worker wages, and fringe benefits required by employment contracts, plus overhead and profit markup. The Contractor shall provide the information on the force account form regarding each worker and supervisor.

Overtime compensation, per diem costs and other reimbursable costs are not allowed unless approved in writing by the Engineer prior to incurring the expense. Overhead and profit markup will not be allowed for such cost. Cost and time for employees' to travel to and from the project site are not allowed unless approved in writing by the Engineer prior to performing the work.

(E) Materials. Contractor and subcontractor(s) are allowed the actual cost of materials (excluding financing cost) delivered and incorporated into the work plus overhead and markup. The Contractor shall provide descriptions and quantities of materials, prices and extensions, and costs to transport materials if not included in the prices for the materials.
The Contractor shall provide legible receipts and invoices for all materials used and transportation charges. The Contractor shall promptly inform the Engineer of any early payment discounts that are available, as well as scheduled or anticipated price increases.

If materials used are not specifically purchased for the force account work but are taken from the Contractor's stock, then in lieu of the invoices, the Contractor shall certify that the material were taken from the stock and that the amount claimed represents the actual cost to the Contractor.

(F) Equipment and Machinery. For equipment and machinery necessary and actually used (other than small tools defined under Subsection 109.04(I) – Small Tools) that are owned or leased or rented, the Contractor is allowed costs for use of equipment or machinery at a per hour rate.

Hourly rates shall include costs for fuel, oil lubricants, supplies, necessary attachments, repairs, maintenance, tire wear, depreciation, storage, and other incidentals. The allowable hourly rates shall be the Contractor's actual customary chargers e.g., shop rates or yard rates, or rental cost as verified by Contractor's records or invoices, provided that the maximum rate shall not exceed the current rates published in the Blue Book, effective at the time of equipment use. Blue Book hourly rates are calculated based upon the following formula:

Hourly Rates = [(Blue Book Monthly Rate ÷ 176) x (Regional Adjustment Factor) x (Rate Adjustment Table Factor) + Hourly Operation Cost

Equipment and machinery costs are not subject to any additional overhead and profit markup.

Equipment and machinery shall be in good condition and suitable for the purpose for which the equipment and machinery are to be used.

For equipment and machinery that is not listed in the Blue Book the Contractor shall obtain he Engineer's written approval of the monthly and hourly rates prior

to using the equipment or machinery. If there is no agreement on the rates, the Engineer will set the rate. Engineer may, prior the use of rental equipment, approve in writing rates that are higher than the published rates, if justified by special circumstance.

(G) Equipment Charges. The rental period for equipment and machinery brought to the work site specifically for the force account work, begins when the equipment or machinery reaches the work site, and continues each day the equipment or machinery is at the site and terminates at the end of the day when the equipment or machinery is no longer needed for the forced account work, or when the equipment or machinery leaves the project site, whichever comes first.

Rental times for all other equipment and machinery used for force account are paid for the time actually used. Prior to the performance of work, the Engineer must approve any hours or operation in excess of 8 hours in any one day. No additional premium beyond the normal rates used will be paid for equipment or machinery over 8 hours per day or 40 hours per week.

The total of all force account rental charges minus the operating cost accrued over the duration of the contract for a specific item of equipment or machinery (same make, model or kind of equipment or machinery doing the same kind of force account work) shall not exceed the replacement cost of that equipment. The Contractor shall provide the cost of replacement to the Engineer prior to using the equipment or machinery. If the Engineer does not agree with the replacement cost provided by the Contractor or if the Contractor does not provide the replacement cost, the Engineer shall set the replacement cost by the Engineer in t accordance with Subsection 105.18 – Disputes and Claims. The Engineer will pay only the hourly operating cost should the replacement cost be reached. This provision shall not apply to the accrued rental charges by barricades and other traffic control devises, or while undergoing maintenance.

Rental times are not allowed or credited for any time during which equipment or machinery is inoperative due to its breakdown.

SC-16 APPRENTICESHIP AGREEMENT PREFERENCE – CONTRACTOR'S RESPONSIBILITY

1. For the duration of the contract awarded utilizing the Hawai‘i Apprenticeship Preference, the CONTRACTOR shall certify each month that work is being conducted on the project, that it continues to be a participant in the relevant apprenticeship program for each trade it employs.

2. Monthly certification shall be made on *MONTHLY REPORT OF CONTRACTOR'S PARTICIPATION IN APPROVED APPRENTICESHIP PROGRAM UNDER ACT 17*

(Monthly Certification Form 2) prepared and made available by the DLIR. *Monthly Certification Form 2* shall be a signed original by the respective apprenticeship program sponsor's authorized official, and submitted by the Contractor with its monthly payment requests. *Monthly Certification Form 2* is available on the DLIR website at: http://hawaii.gov/labor/wdd

3. Should the Contractor fail or refuse to submit its monthly certification forms, or at any time during the construction of the project, cease to be a party to a registered apprenticeship agreement for each apprenticeable trade the Contractor employs, the Contractor will be subject to the following sanctions:

   a. Withholding of the requested payment until the required form(s) are submitted;

   b. Temporary or permanent cessation of work on the project, without recourse to breach of contract claims by the Contractor; provided the DHHL shall be entitled to restitution for nonperformance or liquidated damages claims; or

   c. Proceed to debar pursuant to HRS §103D-702.

4. If events such as "acts of God," acts of a public enemy, acts of the State or any other governmental body in its sovereign or contractual capacity, fires, floods, epidemics, freight embargoes, unusually severe weather, or strikes or other labor disputes prevent the Contractor from submitting the certification forms, the Contractor shall not be penalized as provided herein, provided the Contractor completely and expeditiously complies with the certification process when the event is over.

SC-17 INADVERTENT DISCOVERY OF HUMAN BURIALS

Although not expected, in the event human burials are inadvertently discovered, the CONTRACTOR shall immediately stop work in the vicinity of the burial and contact the following parties and agencies immediately: State Historic Preservation Division, DHHL, Office of Hawaiian Affairs and the Maui - Lanai Islands Burial Council.

DHHL shall provide the CONTRACTOR with a Supplemental Agreement for additional time added to the CONTRACTOR's performance schedule for the mitigation of any inadvertent discovery of human remains.

Depending upon the site and soil conditions, and other factors, the Project Manager may decide to delete the contingent items in its entirety. A Change Order may be issued to delete the work and the contract amount shall be reduced by subtracting the entire corresponding bid amount. If part of the work is done, or if the work exceeds the estimated quantities, payment shall be made on the actual number of units incorporated in the work at the unit price bid.

SC-18 EARTHWORK QUANTITIES

STATE OF HAWAII

SPECIAL CONDITIONS

Prior to any grading operations, the CONTRACTOR shall submit to the Engineer a list of estimated quantities for excavation to complete the drainage grading work. The CONTRACTOR is responsible to dispose of all excavated material offsite. Borrow material shall not be imported until all excavation work is completed and authorized by the Project Manager.

SC-19 STATE GENERAL EXCISE TAX

This project is not exempt from the State of Hawaii General Excise Tax. The CONTRACTOR's prices shall include the General Excise Tax for all work.

SC-20 FINAL SETTLEMENT OF CONTRACT

The following shall be made additional conditions of compliance with DHHL Construction General Condition 7.33:

1. The contractor shall coordinate with all government agencies and utility companies on behalf of DHHL to obtain letter(s) from each respective government agency or utility company indicating that acceptance of the contract work for the project has been granted to DHHL. Copies of the letters shall be submitted to DHHL.

2. Signature, execution, and return of the "Record Drawing" Title tracings.

Payment for all work required to comply with the above items will not be paid for separately but shall be considered incidental to the various contract items.

State of Hawai‘i
DEPARTMENT OF LABOR AND INDUSTRIAL RELATIONS
Princess Ruth Ke‘elikolani Building
830 Punchbowl Street
Honolulu, Hawai‘i 96813

February 15, 2016
WAGE RATE SCHEDULE BULLETIN NO. 487

This schedule of wage rates contained herein is recognized by the Director of Labor and Industrial Relations to be prevailing on public construction work for the purposes of Chapter 104, Hawai‘i Revised Statutes. The schedule of wage rates determines the applicable wage determination for each classification and does not impose any staffing requirements for any classification. The schedule of wage rates is applicable only to those laborers and mechanics employed at the site of work.

As required by law, future wage rates for laborers and mechanics are incorporated into this bulletin based on available information and are subject to change. Whenever the Director determines that the prevailing wage has increased as shown in the wage rate schedule, the contractor must increase the wages accordingly during the performance of the contract. For addenda or additional wage rate schedules, please consult the Internet at http://labor.hawaii.gov/rs.

The Apprentice Schedule is available on the Internet or upon request from the Research and Statistics Office. Pursuant to Section 12-22-6 (1), Hawai‘i Administrative Rules, the Apprentice Schedule is applicable only to apprentices who are parties to apprenticeship agreements registered with or recognized by the Department of Labor and Industrial Relations.

Questions on the schedule should be referred to the Research and Statistics Office at (808) 586-9005.

The next regular schedule will be issued on or about September 15, 2016.

LINDA CHU TAKAYAMA
Director

STATE OF HAWAI‘I
DAVID Y. IGE, Governor

DEPARTMENT OF LABOR AND INDUSTRIAL RELATIONS
LINDA CHU TAKAYAMA, Director

RESEARCH AND STATISTICS OFFICE
PHYLLIS DAYAO, Research & Statistics Officer

OPERATIONS MANAGEMENT INFORMATION STAFF
Janet Kaya, Supervisor

In cooperation with:
WAGE STANDARDS DIVISION
PAMELA MARTIN, Administrator

Classification	Current			2016			2017			2018			Remarks See Pg 6-8
	Prevailing Wage Total	Basic Hourly Rate	Fringe Hourly Rate	Prevailing Wage Total	Basic Hourly Rate	Fringe Hourly Rate	Prevailing Wage Total	Basic Hourly Rate	Fringe Hourly Rate	Prevailing Wage Total	Basic Hourly Rate	Fringe Hourly Rate	
ASPHALT PAVING GROUP:	**9/21/15**												
Asphalt Concrete Material Transfer	$69.34	$39.42	$29.92	-	-	-	-	-	-	-	-	-	13
Asphalt Raker	$68.38	$38.46	$29.92	-	-	-	-	-	-	-	-	-	13
Asphalt Spreader Operator	$69.86	$39.94	$29.92	-	-	-	-	-	-	-	-	-	13
Laborer, Hand Roller	$65.61	$35.69	$29.92	-	-	-	-	-	-	-	-	-	13
Roller Operator (5 tons and under)	$68.11	$38.19	$29.92	-	-	-	-	-	-	-	-	-	13
Roller Operator (over 5 tons)	$69.54	$39.62	$29.92	-	-	-	-	-	-	-	-	-	13
Screed Person	$69.34	$39.42	$29.92	-	-	-	-	-	-	-	-	-	13
EQUIPMENT OPERATOR:													
Combination Loader/Backhoe (over 3/4 cu. yd.)	$68.38	$38.46	$29.92	-	-	-	-	-	-	-	-	-	13
Combination Loader/Backhoe (up to 3/4 cu. yd.)	$67.40	$37.48	$29.92	-	-	-	-	-	-	-	-	-	13
Concrete saws and/or Grinder (self-propelled unit on streets, highways, airports and canals)	$69.34	$39.42	$29.92	-	-	-	-	-	-	-	-	-	13
Grader, Soil Stabilizer, Cold Planer	$70.17	$40.25	$29.92	-	-	-	-	-	-	-	-	-	13
Loader (2-1/2 cu. yds. and under)	$69.34	$39.42	$29.92	-	-	-	-	-	-	-	-	-	13
Loader (over 2-1/2 cu. yds. to and including 5 cu. yds.)	$69.66	$39.74	$29.92	-	-	-	-	-	-	-	-	-	13
TRUCK DRIVER:													
Assistant to Engineer	$68.11	$38.19	$29.92	-	-	-	-	-	-	-	-	-	13
Oil Tanker (double), Hot Liquid Asphalt Tanker	$69.66	$39.74	$29.92	-	-	-	-	-	-	-	-	-	13
Semi-Trailer, Semi-Dump, Asphalt Distributor	$69.34	$39.42	$29.92	-	-	-	-	-	-	-	-	-	13
Slip-in or Pup	$69.66	$39.74	$29.92	-	-	-	-	-	-	-	-	-	13
Single or Rock Cans Tandem Dump Truck (8 cu. yds. & under, water level)	$68.38	$38.46	$29.92	-	-	-	-	-	-	-	-	-	13
Single or Rock Cans Tandem Dump Truck (over 8 cu. yds., water level)	$68.69	$38.77	$29.92	-	-	-	-	-	-	-	-	-	13
Tractor Trailer (hauling equipment)	$69.77	$39.85	$29.92	-	-	-	-	-	-	-	-	-	13
Utility, Flatbed	$68.11	$38.19	$29.92	-	-	-	-	-	-	-	-	-	13
BOILERMAKER	**2/16/15**												
	$63.63	$34.18	$29.45	-	-	-	-	-	-	-	-	-	13
CARPENTER:	**9/21/15**			**8/29/16**			**9/4/17**			**9/3/18**			
Carpenter; Patent Scaffold Erector (Over 14 feet); Piledriver; Pneumatic Nailer	$64.86	$43.90	$20.96	$66.86	$45.65	$21.21	$68.91	$47.45	$21.46	$71.16	$49.45	$21.71	1,12,13
Millwright	$65.11	$44.15	$20.96	$67.11	$45.90	$21.21	$69.16	$47.70	$21.46	$71.41	$49.70	$21.71	1,12,13
Power Saw Operator (2 h.p. & above)	$65.01	$44.05	$20.96	$67.01	$45.80	$21.21	$69.06	$47.60	$21.46	$71.31	$49.60	$21.71	1,12,13
CEMENT FINISHER:	**9/21/15**			**8/29/16**			**9/4/17**			**9/3/18**			
Cement Finisher; Curb Setter; Precast Panel Setter; Manhole Builder	$63.73	$37.90	$25.83	$65.34	$38.50	$26.84	$66.98	$39.10	$27.88	$68.53	$39.80	$28.73	2,12,13
Trowel Machine Operator	$63.88	$38.05	$25.83	$65.49	$38.65	$26.84	$67.13	$39.25	$27.88	$68.68	$39.95	$28.73	2,12,13
CHAIN-LINK FENCE ERECTOR	**10/5/15**			**10/3/16**			**10/2/17**			**10/1/18**			
	$32.40	$20.10	$12.30	$34.45	$21.30	$13.15	$36.55	$22.60	$13.95	$38.75	$24.00	$14.75	10,13
CHLORINATOR	**9/21/15**												
	$23.00	$23.00	$0.00	-	-	-	-	-	-	-	-	-	

Classification	Current			2016			2017			2018			
	Prevailing Wage Total	Basic Hourly Rate	Fringe Hourly Rate	Prevailing Wage Total	Basic Hourly Rate	Fringe Hourly Rate	Prevailing Wage Total	Basic Hourly Rate	Fringe Hourly Rate	Prevailing Wage Total	Basic Hourly Rate	Fringe Hourly Rate	Remarks See Pg 6-8
DIVER:	**9/21/15**												
Diver (Aqua Lung) (Scuba) - Up to a depth of 30 feet	$82.49	$53.13	$29.36	-	-	-	-	-	-	-	-	-	13
Diver (Aqua Lung) (Scuba) - Over a depth of 30 feet	$91.86	$62.50	$29.36	-	-	-	-	-	-	-	-	-	13
Stand-By Diver (Aqua Lung) (Scuba)	$73.11	$43.75	$29.36	-	-	-	-	-	-	-	-	-	13
Diver (Other than Aqua Lung)	$91.86	$62.50	$29.36	-	-	-	-	-	-	-	-	-	3,13
Stand-By Diver (Other than Aqua Lung)	$73.11	$43.75	$29.36	-	-	-	-	-	-	-	-	-	3,13
Tender (Other than Aqua Lung)	$70.08	$40.72	$29.36	-	-	-	-	-	-	-	-	-	13
DRAPERY INSTALLER	**9/21/15**												
	$19.68	$16.82	$2.86	-	-	-	-	-	-	-	-	-	
DRYWALL INSTALLER	**9/21/15**			**8/29/16**			**9/4/17**			**9/3/18**			
	$65.11	$44.15	$20.96	$67.11	$45.90	$21.21	$69.16	$47.70	$21.46	$71.41	$49.70	$21.71	12,13
* **ELECTRICIAN**	**8/23/15**			**2/21/16**									
Cable Splicer (inside/outside)	$75.89	$47.36	$28.53	$76.76	$48.02	$28.74	-	-	-	-	-	-	4,13
Ground Worker (outside)	$56.22	$32.29	$23.93	$56.81	$32.74	$24.07	-	-	-	-	-	-	4,13
Heavy Equipment Operator (outside)	$64.66	$38.75	$25.91	$65.36	$39.29	$26.07	-	-	-	-	-	-	4,13
Line Installer (outside); Wire Installer (inside)	$70.27	$43.05	$27.22	$71.06	$43.65	$27.41	-	-	-	-	-	-	4,13
Technician (inside/outside)	$71.95	$44.34	$27.61	$72.78	$44.96	$27.82	-	-	-	-	-	-	4,13
Telecommunication Worker	**9/21/15**			**8/28/16**			**9/3/17**						
Licensed Technician	$39.49	$27.68	$11.81	$40.78	$28.79	$11.99	$42.13	$29.94	$12.19	-	-	-	13
Technician I / Splicer	$37.87	$26.30	$11.57	$39.09	$27.35	$11.74	$40.38	$28.44	$11.94	-	-	-	13
* **ELEVATOR CONSTRUCTOR MECHANIC**	**2/15/16**												
	$84.275	$54.29	$29.985	-	-	-	-	-	-	-	-	-	13
EQUIPMENT OPERATOR:	**9/21/15**												
Group 1	$67.80	$38.44	$29.36	-	-	-	-	-	-	-	-	-	5,13
Group 2	$67.91	$38.55	$29.36	-	-	-	-	-	-	-	-	-	5,13
Group 3	$68.08	$38.72	$29.36	-	-	-	-	-	-	-	-	-	5,13
Group 4	$68.35	$38.99	$29.36	-	-	-	-	-	-	-	-	-	5,13
Group 5	$68.66	$39.30	$29.36	-	-	-	-	-	-	-	-	-	5,13
Group 6	$69.31	$39.95	$29.36	-	-	-	-	-	-	-	-	-	5,13
Group 7	$69.63	$40.27	$29.36	-	-	-	-	-	-	-	-	-	5,13
Group 8	$69.74	$40.38	$29.36	-	-	-	-	-	-	-	-	-	5,13
Group 9	$69.85	$40.49	$29.36	-	-	-	-	-	-	-	-	-	5,13
Group 9A	$70.08	$40.72	$29.36	-	-	-	-	-	-	-	-	-	5,13
Group 10	$70.14	$40.78	$29.36	-	-	-	-	-	-	-	-	-	5,13
Group 10A	$70.29	$40.93	$29.36	-	-	-	-	-	-	-	-	-	5,13
Group 11	$70.44	$41.08	$29.36	-	-	-	-	-	-	-	-	-	5,13
Group 12	$70.80	$41.44	$29.36	-	-	-	-	-	-	-	-	-	5,13
Group 12A	$71.16	$41.80	$29.36	-	-	-	-	-	-	-	-	-	5,13
FENCE ERECTOR (CHAIN-LINK TYPE)													
See Chain-Link Fence Erector	-	-	-	-	-	-	-	-	-	-	-	-	
FLOOR LAYER (CARPET, LINOLEUM & SOFT TILE)	**3/1/15**												
	$56.90	$31.15	$25.75	-	-	-	-	-	-	-	-	-	13

	Classification	Current Prevailing Wage Total	Current Basic Hourly Rate	Current Fringe Hourly Rate	2016 Prevailing Wage Total	2016 Basic Hourly Rate	2016 Fringe Hourly Rate	2017 Prevailing Wage Total	2017 Basic Hourly Rate	2017 Fringe Hourly Rate	2018 Prevailing Wage Total	2018 Basic Hourly Rate	2018 Fringe Hourly Rate	Remarks See Pg 6-8
	GLAZIER	**9/21/15**												
		$63.15	$34.78	$28.37	-	-	-	-	-	-	-	-	-	6,13
	HELICOPTER WORK:	**9/21/15**												
	Airborne Hoist Operator	$71.66	$42.30	$29.36	-	-	-	-	-	-	-	-	-	13
	Co-Pilot	$71.80	$42.44	$29.36	-	-	-	-	-	-	-	-	-	13
	Pilot	$71.97	$42.61	$29.36	-	-	-	-	-	-	-	-	-	13
	INSULATOR	**9/21/15**						**9/3/17**			**9/2/18**			
		$63.15	$39.65	$23.50	-	-	-	$64.40	$40.50	$23.90	$65.10	$41.00	$24.10	7,13
	IRONWORKER:	**9/21/15**			**9/1/16**									
	Reinforcing, Structural	$66.66	$36.75	$29.91	$67.66	$37.75	$29.91	-	-	-	-	-	-	8,12,13
	LABORER:	**8/31/15**			**8/29/16**			**9/4/17**			**9/3/18**			
	Driller	$52.86	$35.35	$17.51	$54.76	$36.35	$18.41	$56.66	$37.40	$19.26	$58.66	$38.40	$20.26	1,13
	Gunite Operator or Shotcrete Operator	$52.36	$34.85	$17.51	$54.26	$35.85	$18.41	$56.16	$36.90	$19.26	$58.16	$37.90	$20.26	1,13
	High Scaler (Working Suspended)	$52.36	$34.85	$17.51	$54.26	$35.85	$18.41	$56.16	$36.90	$19.26	$58.16	$37.90	$20.26	13
	Laborer I	$51.86	$34.35	$17.51	$53.76	$35.35	$18.41	$55.66	$36.40	$19.26	$57.66	$37.40	$20.26	1,13
	Laborer II	$49.26	$31.75	$17.51	$51.16	$32.75	$18.41	$53.06	$33.80	$19.26	$55.06	$34.80	$20.26	1,13
	Light/Final Clean-up (Janitorial) Laborer	$39.09	$25.75	$13.34	$41.04	$26.75	$14.29	$42.94	$27.80	$15.14	$44.92	$28.80	$16.12	1,13
	Mason Tender/Hod Carrier	$52.36	$34.85	$17.51	$54.26	$35.85	$18.41	$56.16	$36.90	$19.26	$58.16	$37.90	$20.26	1,13
	Powder Blaster	$52.86	$35.35	$17.51	$54.76	$36.35	$18.41	$56.66	$37.40	$19.26	$58.66	$38.40	$20.26	1,13
	Window Washer (Outside) (On bosun's chair, cable-suspended scaffold or work platform)	$51.36	$33.85	$17.51	$53.26	$34.85	$18.41	$55.16	$35.90	$19.26	$57.16	$36.90	$20.26	13
*	**LANDSCAPER:**	**2/15/16**			**8/29/16**			**9/4/17**			**9/3/18**			
	Landscape & Irrigation Laborer A	$34.37	$23.70	$10.67	$35.52	$24.25	$11.27	$36.82	$24.85	$11.97	$38.18	25.50	$12.68	
	Landscape & Irrigation Laborer B	$34.97	$24.30	$10.67	$36.22	$24.95	$11.27	$37.62	$25.65	$11.97	$39.08	$26.40	$12.68	
	Landscape & Irrigation Maintenance Laborer	$30.62	$19.95	$10.67	$31.52	$20.25	$11.27	$32.62	$20.65	$11.97	$33.78	$21.10	$12.68	
	LATHER	**9/21/15**			**8/29/16**			**9/4/17**			**9/3/18**			
		$65.11	$44.15	$20.96	$67.11	$45.90	$21.21	$69.16	$47.70	$21.46	$71.41	$49.70	$21.71	12,13
	MASON; Bricklayer;	**9/16/13**												
	Cement Blocklayer; Stone Mason; Precast Sill Setter	$60.32	$36.85	$23.47	-	-	-	-	-	-	-	-	-	2,13
	Pointer-Caulker-Weatherproofer	$60.57	$37.10	$23.47	-	-	-	-	-	-	-	-	-	2,13
*	**PAINTER:**	**2/15/16**												
	Painter; Spray Painter; Sandblaster or Waterblaster	$62.77	$34.85	$27.92	-	-	-	-	-	-	-	-	-	
	PLASTERER:	**9/21/15**			**8/29/16**			**9/4/17**			**9/3/18**			
		$64.87	$39.04	$25.83	$66.63	$39.79	$26.84	$68.42	$40.54	$27.88	$70.07	$41.34	$28.73	2,12,13
	PLUMBER: (Note: 2 increases per year starting in 2016)	**1/3/16**			**7/3/16**			**1/1/17**			**1/7/18**			
	Plumber; Pipefitter; Refrigeration Fitter; Heating & Air Conditioning Fitter; Sprinkler Fitter; Steamfitter	$65.08	$40.35	$24.73	$65.83	$40.85	$24.98	$66.60	$41.35	$25.25	$68.12	$42.35	$25.77	9,13
								7/2/17			**7/1/18**			
	Plumber; Pipefitter; Refrigeration Fitter; Heating & Air Conditioning Fitter; Sprinkler Fitter; Steamfitter	-	-	-	-	-	-	$67.35	$41.85	$25.50	$68.87	$42.85	$26.02	9,13

Classification	Current			2016			2017			2018			Remarks See Pg 6-8
	Prevailing Wage Total	Basic Hourly Rate	Fringe Hourly Rate	Prevailing Wage Total	Basic Hourly Rate	Fringe Hourly Rate	Prevailing Wage Total	Basic Hourly Rate	Fringe Hourly Rate	Prevailing Wage Total	Basic Hourly Rate	Fringe Hourly Rate	
ROOFER:	**9/21/15**			**9/4/16**									
Shingle, Tile, Built-up Roofing	$56.38	$38.85	$17.53	$57.38	$39.85	$17.53	-	-	-	-	-	-	12
Coal Tar Pitch	$95.23	$77.70	$17.53	$97.23	$79.70	$17.53	-	-	-	-	-	-	12
SANDBLASTER OR WATERBLASTER:													
Use wages of craft to which sand or water blasting is incidental.													
SHEETMETAL WORKER (Note: 2 increases per year)	**9/21/15**			**2/28/16**			**2/26/17**			**3/4/18**			
	$63.54	$39.40	$24.14	$64.68	$39.99	$24.69	$67.20	$41.29	$25.91	$69.23	$42.20	$27.03	13
				8/28/16			**9/3/17**			**9/2/18**			
				$65.91	$40.59	$25.32	$68.33	$41.80	$26.53	$69.99	$42.55	$27.44	13
TAPER	**1/1/16**						**1/1/17**						
	$63.80	$41.50	$22.30	-	-	-	$65.90	$42.00	$23.90	-	-	-	
TERMITE TREATER	**9/21/15**												
	$18.99	$14.74	$4.25	-	-	-	-	-	-	-	-	-	
TERRAZZO:	**9/16/13**												
Terrazzo Setter	$60.57	$37.10	$23.47	-	-	-	-	-	-	-	-	-	2,13
Terrazzo Base Grinder	$58.76	$35.29	$23.47	-	-	-	-	-	-	-	-	-	2,13
Certified Terrazzo Floor Grinder and Tender	$57.21	$33.74	$23.47	-	-	-	-	-	-	-	-	-	2,13
Terrazzo Floor Grinder	$55.71	$32.24	$23.47	-	-	-	-	-	-	-	-	-	2,13
TILE SETTER:	**9/16/13**												
Ceramic Hard Tile; Marble Setter	$60.57	$37.10	$23.47	-	-	-	-	-	-	-	-	-	2,13
Certified Ceramic Tile & Marble Helper	$57.21	$33.74	$23.47	-	-	-	-	-	-	-	-	-	2,13
TRUCK DRIVER:	**9/21/15**												
Concrete Mixer	$36.12	$32.50	$3.62	-	-	-	-	-	-	-	-	-	
Concrete Mixer/Booster	$45.76	$31.93	$13.83	-	-	-	-	-	-	-	-	-	
Dump Truck, 8 cu. yds. & under (water level); Water Truck (up to & including 2,000 gallons)	$68.35	$38.99	$29.36	-	-	-	-	-	-	-	-	-	13
Flatbed, Utility, etc.	$68.08	$38.72	$29.36	-	-	-	-	-	-	-	-	-	13
End Dump, Unlicensed (Euclid, Mack, Caterpillar, or similar); Tractor Trailer (hauling equipment)	$69.74	$40.38	$29.36	-	-	-	-	-	-	-	-	-	13
Semi-Trailer, Rock Cans, or Semi-Dump	$69.31	$39.95	$29.36	-	-	-	-	-	-	-	-	-	13
Slip-in or Pup	$69.63	$40.27	$29.36	-	-	-	-	-	-	-	-	-	13
Tandem Dump Truck, over 8 cu. yds. (water level); Water Truck (over 2,000 gallons)	$68.66	$39.30	$29.36	-	-	-	-	-	-	-	-	-	13

Classification	Current Prevailing Wage Total	Current Basic Hourly Rate	Current Fringe Hourly Rate	2016 Prevailing Wage Total	2016 Basic Hourly Rate	2016 Fringe Hourly Rate	2017 Prevailing Wage Total	2017 Basic Hourly Rate	2017 Fringe Hourly Rate	2018 Prevailing Wage Total	2018 Basic Hourly Rate	2018 Fringe Hourly Rate	Remarks See Pg 6-8
UNDERGROUND LABORER:	**8/31/15**			**8/29/16**			**9/4/17**			**9/3/18**			
Worker in a raise, shaft, or tunnel.													
Group 1	$52.46	$34.95	$17.51	$54.36	$35.95	$18.41	$56.26	$37.00	$19.26	$58.26	$38.00	$20.26	13
Group 2	$53.96	$36.45	$17.51	$55.86	$37.45	$18.41	$57.76	$38.50	$19.26	$59.76	$39.50	$20.26	13
Group 3	$54.46	$36.95	$17.51	$56.36	$37.95	$18.41	$58.26	$39.00	$19.26	$60.26	$40.00	$20.26	13
Group 4	$55.46	$37.95	$17.51	$57.36	$38.95	$18.41	$59.26	$40.00	$19.26	$61.26	$41.00	$20.26	13
Group 5	$55.71	$38.20	$17.51	$57.61	$39.20	$18.41	$59.51	$40.25	$19.26	$61.51	$41.25	$20.26	13
Group 6	$55.81	$38.30	$17.51	$57.71	$39.30	$18.41	$59.61	$40.35	$19.26	$61.61	$41.35	$20.26	13
Group 7	$56.06	$38.55	$17.51	$57.96	$39.55	$18.41	$59.86	$40.60	$19.26	$61.86	$41.60	$20.26	13
Group 8	$56.51	$39.00	$17.51	$58.41	$40.00	$18.41	$60.31	$41.05	$19.26	$62.31	$42.05	$20.26	13
WATER FRONT CONSTRUCTION (DREDGING):	**9/21/15**												
CLAMSHELL OR DIPPER DREDGES:													
Clamshell or Dipper Operator	$70.80	$41.44	$29.36	-	-	-	-	-	-	-	-	-	11,13
Mechanic; Welder; Watch Engineer	$70.14	$40.78	$29.36	-	-	-	-	-	-	-	-	-	13
Deckmate; Bargemate	$69.74	$40.38	$29.36	-	-	-	-	-	-	-	-	-	13
Fire Person; Oiler; Deckhand; Barge Worker	$68.08	$38.72	$29.36	-	-	-	-	-	-	-	-	-	13
HYDRAULIC SUCTION DREDGES:													
Lever Operator	$70.44	$41.08	$29.36	-	-	-	-	-	-	-	-	-	13
Mechanic; Welder	$70.14	$40.78	$29.36	-	-	-	-	-	-	-	-	-	13
Watch Engineer (steam or electric)	$70.29	$40.93	$29.36	-	-	-	-	-	-	-	-	-	13
Dozer Operator	$70.08	$40.72	$29.36	-	-	-	-	-	-	-	-	-	13
Deckmate	$69.74	$40.38	$29.36	-	-	-	-	-	-	-	-	-	13
Winch Operator (stern winch on dredge)	$69.63	$40.27	$29.36	-	-	-	-	-	-	-	-	-	13
Fire Person; Oiler; Deckhand (can operate anchor scow under direction of deckmate); Levee Operator	$68.08	$38.72	$29.36	-	-	-	-	-	-	-	-	-	13
DERRICKS:													
Operator: Derrick, Piledriver, Crane	$70.80	$41.44	$29.36	-	-	-	-	-	-	-	-	-	13
Deckmate; Saurman Type Dragline (up to & including 5 yds.)	$69.74	$40.38	$29.36	-	-	-	-	-	-	-	-	-	13
Saurman Type Dragline (over 5 cu. yds.)	$70.14	$40.78	$29.36	-	-	-	-	-	-	-	-	-	13
Fire Person; Oiler; Deckhand	$68.08	$38.72	$29.36	-	-	-	-	-	-	-	-	-	13
BOAT OPERATORS:													
Master Boat Operator	$70.44	$41.08	$29.36	-	-	-	-	-	-	-	-	-	13
Boat Operator	$70.29	$40.93	$29.36	-	-	-	-	-	-	-	-	-	13
Boat Deckhand	$68.08	$38.72	$29.36	-	-	-	-	-	-	-	-	-	13
WATER WELL DRILLER:	**9/21/15**												
Water Well Driller	$38.47	$31.00	$7.47	-	-	-	-	-	-	-	-	-	
Water Well Driller Helper	$24.37	$18.00	$6.37	-	-	-	-	-	-	-	-	-	
WELDER:													
Use wages of craft to which welding is incidental, except for Chain-Link Fence Erector. See remark.													10

Comments: Overtime must be paid at one and one-half times the basic hourly rate plus the hourly cost of required fringe benefits.

*** Indicates a wage, fringe benefit, remark, or title change from the previous bulletin.**

REMARKS

1. Carpenter, Laborer (excluding High Scaler, Window Washer): $.50 per hour shall be added to the regular straight-time rate for height pay for each hour while working from a bosun's chair and/or from a cable-suspended scaffold or work platform which is free swinging (not attached to building) for each hour worked on said rig.

2. Cement Finisher, Mason, Plasterer, Terrazzo, Tile Setter: $1.00 per hour shall be added to the regular straight-time rate for height pay for each hour while working from a bosun's chair and/or from a cable-suspended scaffold or work platform which is free swinging (not attached to building) for each hour worked on said rig.

3. Diver (Other than Aqua Lung), Stand-By Diver (Other than Aqua Lung):

   A. On any dive exceeding 50 feet, the diver shall, in addition, be paid the following amount of "depth money":

50 feet to 100 feet	$1.50 per foot in excess of 50 feet
100 feet to 150 feet	$100.00 plus $2.00 per foot in excess of 100 feet
150 feet to 200 feet	$200.00 plus $3.00 per foot in excess of 150 feet

   B. When it is necessary for a Diver to enter any pipe, tunnel or other enclosure, the said Diver shall, in addition to the hourly rate, receive a premium in accordance with the following schedule for distance traveled from the entrance of the pipe, tunnel or other enclosure:

      1) When able to stand erect, but in which there is no vertical ascent:

5 feet to 50 feet	$5.00 per day
50 feet to 100 feet	$7.50 per day
100 feet to 150 feet	$12.50 per day
Greater than 150 feet	The premium shall be increased an additional $7.50 for each succeeding 50 feet.

      2) When unable to stand erect and in which there is no vertical ascent:

5 feet to 50 feet	$5.00 per day
50 feet to 100 feet	$7.50 per day
100 feet to 150 feet	$12.50 per day
150 feet to 200 feet	$36.75 per day
200 feet to 300 feet	$1.00 per foot
300 feet to 450 feet	$1.50 per foot
450 feet to 600 feet	$2.50 per foot

4. Electrician:

   A. One and one-half times the straight-time rate while working in a tunnel under construction; under water with aqualung equipment; in a completed tunnel which has only one entrance or exit providing access to safety and where no other personnel are working; or in an underground structure having no access to safety or where no other personnel are working.

   B. Double the straight-time rate shall be paid for the following types of hazardous work regardless if fall prevention devices are used:

      1) While working from poles, trusses, stacks, towers, tanks, bosun's chairs, swinging or rolling scaffolds, supporting structures, and open platforms, over 70 feet from the ground where the employee is subject to a free fall; provided, however, that when work is performed on stacks, towers or permanent platforms where the employees are on a firm footing within an enclosure, a hazardous condition does not exist regardless of height;
      2) While working outside of a railing or enclosure, or temporary platforms extending outside of a building, or from scaffolding or ladder within an enclosure where an employee's footing is within one foot of the top of such railing, and the employee is subject to a free fall of over 70 feet;
      3) Working on buildings while leaning over the railing or edge of the building, and is subject to a free fall of 70 feet; or
      4) Two hours minimum hazardous pay per day shall be paid while climbing to a stack, tower or permanent platform which exceeds 70 feet from the ground but where the employee is on a firm footing within an enclosure.

   C. Five percent per hour shall be added to the hourly wage for height pay while working above 9,000 feet elevation.

REMARKS

5. Equipment Operator:

   A. Operators and Assistants to Engineer (climbing a boom) of cranes (under 50 tons) with booms of eighty feet or more (including jib) or of cranes (under 50 tons) with leads of one hundred feet or more, shall receive additional premium according to the following schedule:

	Per Hour
Booms of 80 feet up to, or leads of 100 feet up to, but not including 130 feet	$0.50
Booms and/or leads of 130 feet up to, but not including 180 feet	$0.75
Booms and/or leads of 180 feet up to and including 250 feet	$1.15
Booms and/or leads over 250 feet	$1.50

   Operators and Assistants to Engineer (climbing a boom) of cranes (50 tons and over) with booms of 180 feet or more (including jib) shall receive additional premium according to the following schedule:

	Per Hour
Booms of 180 feet up to and including 250 feet	$1.25
Booms over 250 feet	$1.75

   Note: The boom shall be measured from the center of the heel pin to the center of the boom or jib point sheave.

   B. $1.25 per hour shall be added to the hourly wage while operating a rig suspended by ropes or cables or to perform work on a Yo-Yo Cat.

   C. In a raise or shaft, a premium of $.40 per hour will be paid in addition to the regular straight time wage.
   A raise is defined to be an underground excavation (lined or unlined) whose length exceeds its width and the inclination of the grade from the excavation is greater than 20 degrees from the horizontal.
   A shaft is defined to be an excavation (lined or unlined) made from the surface of the earth, generally vertical in nature, but may decline up to 75 degrees from the vertical, and whose depth is greater than 15 feet and its largest horizontal dimension. Includes an underground silo.

   D. In a tunnel, a premium of $.30 per hour will be paid in addition to the regular straight time wages.
   A tunnel is defined to be an underground excavation (lined or unlined) whose length exceeds its width and the inclination of the grade from the excavation is no greater than 20 degrees from the horizontal.

6. Glazier: Effective 9/16/13 - $1.00 per hour shall be added to the hourly wage for height pay for exterior glazing work performed in a walking/working surface with an unprotected side or edge 10 feet or more above a lower level which requires protection from fall hazards by guardrail systems, safety net systems, personal fall arrest systems, position devise systems, fall restraint systems, perimeter safety cables or controlled decking zones.

7. Insulator: Six percent per hour shall be added to the hourly wage for hazardous pay while working from a boatswain chair, staging or free standing scaffolding erected from the ground up or mezzanine floor subject to a free fall and skyclimber suspended from a permanent structure and when working above 40 feet.

8. Ironworker: $.50 per hour shall be added to the hourly wage while working in tunnels or coffer dams. $1.00 per hour shall be added to the hourly wage while working under or covered with water (submerged), or on the summits of Mauna Kea, Mauna Loa or Haleakala.

9. Plumber: One and one-half times the straight-time rate for height pay while working from OSHA approved trusses, stacks, towers, tanks, bosun's chair, swinging or rolling scaffolding, supporting structures or on open platforms where the employee is subject to a direct fall of 40 feet or more. Provided, however, that when said work is performed where the employee is on a firm footing within an enclosure, a hazardous condition does not exist regardless of height. $1.00 per hour shall be added to the straight-time rate while working with flame cutting or any type of welding equipment on any galvanized material or product for at least an hour.

10. Chain-Link Fence Erector: $1.00 per hour shall be added to the hourly wage while performing welding services.

11. Water Front Construction: Clamshell or Dipper Operator: $.50 per hour shall be added to the straight-time rate while working with boom (including jib) over 130 feet.

12. Possible wage/fringe option increases:
   Carpenter, Drywall and Lather: Effective 9/4/17 - $0.20; 9/3/18 - $0.25
   Cement Finisher, Plasterer: Effective WRS 488 - $0.30; 9/4/17 - $0.30; 9/3/18 - $0.30
   Ironworker: Effective WRS 488 - $1.00
   Roofer: Effective WRS 488 - $0.40

REMARKS

13. Overtime/Holiday must be paid at one and one-half times the basic hourly rate plus the hourly cost of required fringe, with the following exceptions:

A. ***Two times*** *the basic hourly rate plus the hourly cost of required fringe.*

Asphalt Paving: Sunday, New Year's Day, Martin Luther King Day, President's Day, Memorial Day, Kamehameha Day, Fourth of July, Labor Day, Veterans' Day, Thanksgiving Day and Christmas Day.

Boilermaker: Sunday, New Year's Day, President's Day, Memorial Day, Kamehameha Day, July 4th, Labor Day, Veteran's Day, Thanksgiving Day and Christmas Day.

Diver: Sunday, New Year's Day, Martin Luther King Day, Presidents' Day, Memorial Day, Kamehameha Day, Fourth of July, Labor Day, Veterans' Day, Thanksgiving Day and Christmas Day.

Electrician: Sunday, New Year's Day, Presidents' Day, Memorial Day, Kamehameha Day, Fourth of July, Labor Day, Thanksgiving Day and Christmas Day.

Elevator Constructor: Saturday, Sunday, New Year's Day, Memorial Day, Independence Day, Labor Day, Veterans' Day, Thanksgiving Day and Christmas Day.

Equipment Operator: Sunday, New Year's Day, Martin Luther King Day, Presidents' Day, Memorial Day, Kamehameha Day, Fourth of July, Labor Day, Veterans' Day, Thanksgiving Day and Christmas Day.

Floor Layer: Labor Day.

Glazier: Sunday.

Helicopter Worker: Sunday, New Year's Day, Martin Luther King Day, Presidents' Day, Memorial Day, Kamehameha Day, Fourth of July, Labor Day, Veterans' Day, Thanksgiving Day and Christmas Day.

Ironworker: Sunday, New Year's Day, Presidents' Day, Memorial Day, Kamehameha Day, Fourth of July, Labor Day, Veteran's Day, Thanksgiving Day and Christmas Day.

Plumber: Sunday, New Year's Day, Martin Luther King Day, President's Day, Memorial Day, Kamehameha Day, Independence Day, Labor Day, Veteran's Day, Thanksgiving Day and Christmas Day.

Sheetmetal Worker: Sunday, New Year's Day, Martin Luther King Day, President's Day, Memorial Day, Kamehameha Day, Independence Day, Labor Day, Veteran's Day, Thanksgiving Day and Christmas Day.

Telecommunication: Sunday, New Year's Day, Presidents' Day, Memorial Day, Independence Day, Labor Day, Thanksgiving Day and Christmas Day.

Truck Driver, except Concrete Mixer & Concrete Mixer/Booster: Sunday, New Year's Day, Martin Luther King Day, Presidents' Day Memorial Day, Kamehameha Day, Fourth of July, Labor Day, Veterans' Day, Thanksgiving Day and Christmas Day.

Water Front Construction (Dredging): Sunday, New Year's Day, Martin Luther King Day, Presidents' Day, Memorial Day, Kamehameha Day, Fourth of July, Labor Day, Veterans' Day, Thanksgiving Day and Christmas Day.

B. ***Three times*** *the basic hourly wage plus the hourly cost of required fringe* ***on Labor Day****.*

Carpenter
Cement Finisher
Chain Link Fence Erector
Drywall
Insulator
Laborer
Lather
Mason
Plasterer
Terrazzo
Tile Setter
Underground Laborer

APPRENTICE SCHEDULE BULLETIN NO. 487 February 15, 2016

Rates are applicable only to apprentices who are parties to agreements registered with the Department of Labor and where the journeyworker to apprentice ratio is met.

Apprentice Classifications	Interval Hrs	BASIC HOURLY RATE 1st	2nd	3rd	4th	5th	6th	7th	8th	9th	10th	FRINGE BENEFIT HOURLY RATE Total	Remarks See Pg 10-11
BOILERMAKER	1000	$23.93	$25.64	$27.34	$29.05	$30.76	$32.47					$29.45	10
CARPENTER													
Indentured Prior to 9/1/02	1000	$17.56										$12.27	1,10
"	1000		$19.76	$21.95	$26.34	$30.73	$35.12	$39.51	$41.71			$20.96	1,10
Indentured After 9/1/02	1000	$17.56										$8.27	1,10
"	1000		$19.76									$12.26	1,10
"	1000			$21.95	$26.34							$14.76	1,10
"	1000					$30.73	$35.12					$16.76	1,10
"	1000							$39.51	$41.71			$18.76	1,10
(Effective 8/29/16)													
* CARPENTER													
Indentured Prior to 9/1/02	1000	$18.26										$12.52	1,10
"	1000		$20.54	$22.83	$27.39	$31.96	$36.52	$41.09	$43.37			$21.21	1,10
Indentured After 9/1/02	1000	$18.26										$8.52	1,10
"	1000		$20.54									$12.51	1,10
"	1000			$22.83	$27.39							$15.01	1,10
"	1000					$31.96	$36.52					$17.01	1,10
"	1000							$41.09	$43.37			$19.01	1,10
CEMENT FINISHER													
Indentured Prior to 9/1/03	1000	$18.95										$8.37	2,10
"	1000		$20.85	$22.74	$26.53	$28.43	$30.32	$32.22	$34.11			$25.83	2,10
Indentured On or After 9/1/03	1000	$18.95	$20.85	$22.74	$26.53	$28.43	$30.32	$32.22	$34.11			$13.02	2,10
(Effective 8/29/16)													
* CEMENT FINISHER													
Indentured Prior to 9/1/03	1000	$19.25										$8.92	2,10
"	1000		$21.18	$23.10	$26.95	$28.88	$30.80	$32.73	$34.65			$26.84	2,10
Indentured On or After 9/1/03	1000	$19.25	$21.18	$23.10	$26.95	$28.88	$30.80	$32.73	$34.65			$13.97	2,10

APPRENTICE SCHEDULE BULLETIN NO. 487 February 15, 2016

Rates are applicable only to apprentices who are parties to agreements registered with the Department of Labor and where the journeyworker to apprentice ratio is met.

Apprentice Classifications	Interval Hrs	BASIC HOURLY RATE 1st	2nd	3rd	4th	5th	6th	7th	8th	9th	10th	FRINGE BENEFIT HOURLY RATE Total	Remarks See Pg 10-11
CONSTRUCTION CRAFT LABORER (LABORER I)													
Indentured On or After 9/3/02	1000	$17.18										$6.55	1,10
"	1000		$20.61	$24.05	$27.48							$12.95	1,10
*** (Effective 8/29/16)**													
CONSTRUCTION CRAFT LABORER (LABORER I)													
Indentured On or After 9/3/02	1000	$17.68										$7.05	1,10
"	1000		$21.21	$24.75	$28.28							$13.60	1,10
CONSTRUCTION EQUIPMENT OPERATOR													
Indentured On or After 9/1/02	1000	$20.36										$7.05	3,10
"	1000		$22.40									$17.37	3,10
"	1000			$24.43								$18.31	3,10
"	1000				$28.50							$20.19	3,10
"	1000					$32.58						$22.06	3,10
"	1000						$36.65					$23.94	3,10
DRYWALL INSTALLER													
Indentured Prior to 9/1/02	1000	$17.66										$12.27	10
"	1000		$19.87	$22.08	$26.49	$30.91	$35.32	$39.74	$41.94			$20.96	10
Indentured After 9/1/02	1000	$17.66										$8.27	10
"	1000		$19.87									$12.26	10
"	1000			$22.08	$26.49							$14.76	10
"	1000					$30.91	$35.32					$16.76	10
"	1000							$39.74	$41.94			$18.76	10
(Effective 8/29/16)													
***** DRYWALL INSTALLER													
Indentured Prior to 9/1/02	1000	$18.36										$12.52	10
"	1000		$20.66	$22.95	$27.54	$32.13	$36.72	$41.31	$43.61			$21.21	10
Indentured After 9/1/02	1000	$18.36										$8.52	10
"	1000		$20.66									$12.51	10
"	1000			$22.95	$27.54							$15.01	10
"	1000					$32.13	$36.72					$17.01	10
"	1000							$41.31	$43.61			$19.01	10

APPRENTICE SCHEDULE BULLETIN NO. 487 February 15, 2016

Rates are applicable only to apprentices who are parties to agreements registered with the Department of Labor and where the journeyworker to apprentice ratio is met.

Apprentice Classifications	Interval Hrs	BASIC HOURLY RATE 1st	2nd	3rd	4th	5th	6th	7th	8th	9th	10th	FRINGE BENEFIT HOURLY RATE Total	Remarks See Pg 10-11
ELECTRICIAN (WIRE & LINE INSTALLER)	1000	$15.07										$10.10	10
" "	1000		$17.22									$10.42	10
" "	1000			$19.37								$16.59	4,10
" "	1000				$21.53							$17.57	4,10
" "	1000					$23.68						$18.53	4,10
" "	1000						$25.83					$19.49	4,10
" "	1000							$27.98				$20.47	4,10
" "	1000								$30.14			$21.44	4,10
" "	1000									$34.44		$23.36	4,10
" "	1000										$38.75	$25.30	4,10
(Effective 2/21/16)													
* ELECTRICIAN (WIRE & LINE INSTALLER)	1000	$15.28										$9.38	10
" "	1000		$17.46									$9.70	10
" "	1000			$19.64								$16.28	4,10
" "	1000				$21.83							$17.27	4,10
" "	1000					$24.01						$18.30	4,10
" "	1000						$26.19					$19.31	4,10
" "	1000							$28.37				$20.31	4,10
" "	1000								$30.56			$21.33	4,10
" "	1000									$34.92		$23.36	4,10
" "	1000										$39.29	$25.38	4,10
* ELEVATOR CONSTRUCTOR	850	$27.145										-	10
"	850		$29.86									$29.985	10
"	1700			$35.29	$38.00	$43.43						$29.985	10
FLOOR LAYER													
Indentured After 2/27/94	1000	$12.46	$14.02									$16.75	10
" "	1000			$15.58	$17.13							$21.75	10
" "	1000					$18.69	$20.25	$23.36	$26.48			$25.75	10

APPRENTICE SCHEDULE BULLETIN NO. 487 February 15, 2016

Rates are applicable only to apprentices who are parties to agreements registered with the Department of Labor and where the journeyworker to apprentice ratio is met.

Apprentice Classifications	Interval Hrs	BASIC HOURLY RATE 1st	2nd	3rd	4th	5th	6th	7th	8th	9th	10th	FRINGE BENEFIT HOURLY RATE Total	Remarks See Pg 10-11
GLAZIER													
Indentured On or After 7/1/99	1000	$15.65										$25.73	5,10
"	1000		$17.39									$25.97	5,10
"	1000			$19.13								$26.21	5,10
"	1000				$20.87							$26.45	5,10
"	1000					$24.35						$26.93	5,10
"	1000						$26.09					$27.17	5,10
"	1000							$27.82				$27.41	5,10
"	1000								$29.56			$27.65	5,10
"	1000									$31.30		$27.89	5,10
"	1000										$33.04	$28.13	5,10
HEAVY DUTY REPAIRER & WELDER (EQUIP. OPR 9A)													
Indentured On or After 9/1/02	1000	$20.36										$7.05	3,10
"	1000		$22.40									$17.37	3,10
"	1000			$24.43								$18.31	3,10
"	1000				$28.50							$20.19	3,10
"	1000					$32.58						$22.06	3,10
"	1000						$34.61					$23.01	3,10
"	1000							$36.65				$23.94	3,10
"	1000								$38.68			$24.89	3,10
INSULATOR													
Hired After 5/3/95	2000	$19.83										$7.70	6,10
"	2000		$19.83									$17.31	6,10
"	2000			$23.79								$17.59	6,10
"	2000				$27.76							$17.88	6,10
"	2000					$31.72						$18.16	6,10

APPRENTICE SCHEDULE BULLETIN NO. 487 February 15, 2016

Rates are applicable only to apprentices who are parties to agreements registered with the Department of Labor and where the journeyworker to apprentice ratio is met.

Apprentice Classifications	Interval Hrs	BASIC HOURLY RATE 1st	2nd	3rd	4th	5th	6th	7th	8th	9th	10th	FRINGE BENEFIT HOURLY RATE Total	Remarks See Pg 10-11
IRONWORKER (REINFORCING & STRUCTURAL)													
Indentured After 10/31/93	1000	$18.38										$24.67	7,10
"	1000		$20.21									$25.19	7,10
"	1000			$22.05								$25.71	7,10
"	1000				$25.73							$26.76	7,10
"	1000					$29.40						$27.81	7,10
"	1000						$33.08					$28.86	7,10
(Effective 9/1/16)													
* IRONWORKER (REINFORCING & STRUCTURAL)													
Indentured After 10/31/93	1000	$18.88										$24.67	7,10
"	1000		$20.76									$25.19	7,10
"	1000			$22.65								$25.71	7,10
"	1000				$26.43							$26.76	7,10
"	1000					$30.20						$27.81	7,10
"	1000						$33.98					$28.86	7,10
MASON													
BRICKLAYER													
Indentured On or After 9/1/03	1000	$18.43	$20.27	$22.11	$25.80	$27.64	$29.48	$31.32	$33.17			$10.87	2,10
STONE MASON													
Indentured On or After 9/1/03	1000	$20.27	$22.11	$23.95	$25.80	$27.64	$29.48	$31.32	$33.17			$10.87	2,10
POINTER-CAULKER-WEATHERPROOFER													
Indentured On or After 9/1/03	1000	$18.55	$20.41	$22.26	$25.97	$29.68	$33.39					$10.87	2,10
* PAINTER	1000	$15.68										$8.72	
"	1000		$17.43	$19.17	$20.91	$22.65						$12.22	
"	1000						$24.40					$13.22	
"	1000							$27.88	$31.37			$13.97	
* PAVING EQUIPMENT OPERATOR	1000	$21.68										$7.05	10
"	1000		$27.59									$17.83	10
"	1000			$31.54								$20.76	10
"	1000				$35.48							$24.68	10

Rates are applicable only to apprentices who are parties to agreements registered with the Department of Labor and where the journeyworker to apprentice ratio is met.

Apprentice Classifications	Interval Hrs	BASIC HOURLY RATE 1st	2nd	3rd	4th	5th	6th	7th	8th	9th	10th	FRINGE BENEFIT HOURLY RATE Total	Remarks See Pg 10-11
PLASTERER													
Indentured On or After 9/1/03	1000	$15.62	$17.57	$19.52	$21.47	$23.42	$27.33	$31.23	$35.14			$13.02	2,10
(Effective 8/29/16)													
* PLASTERER													
Indentured On or After 9/1/03	1000	$15.92	$17.91	$19.90	$21.88	$23.87	$27.85	$31.83	$35.81			$14.03	2,10
PLUMBER:													
PLUMBER; FIRE SPRINKLER FITTER; REFRIGERATION AIR CONDITIONING; STEAMFITTER-WELDER													
Indentured Prior to 9/2/85	1000	$14.12										$18.63	8,10
"	1000		$16.14									$19.10	8,10
"	1000			$18.16								$19.57	8,10
"	1000				$20.18							$20.04	8,10
"	1000					$22.19						$20.51	8,10
"	1000						$24.21					$20.98	8,10
"	1000							$26.23				$21.45	8,10
"	1000								$28.25			$21.92	8,10
"	1000									$30.26		$22.39	8,10
"	1000										$32.28	$22.85	8,10
PLUMBER:													
PLUMBER; FIRE SPRINKLER FITTER; REFRIGERATION AIR CONDITIONING; STEAMFITTER-WELDER													
Indentured On or After 9/2/85	1000	$16.22										$5.00	8,10
"	1000		$16.22									$5.05	8,10
"	1000			$19.17								$6.61	8,10
"	1000				$19.17							$6.61	8,10
"	1000					$22.19						$7.30	8,10
"	1000						$22.19					$7.30	8,10
"	1000							$26.23				$8.13	8,10
"	1000								$26.23			$8.13	8,10
"	1000									$30.26		$8.76	8,10
"	1000										$30.26	$8.76	8,10

PLUMBER: Continued on Next Page

Rates are applicable only to apprentices who are parties to agreements registered with the Department of Labor and where the journeyworker to apprentice ratio is met.

Apprentice Classifications	Interval Hrs	BASIC HOURLY RATE 1st	2nd	3rd	4th	5th	6th	7th	8th	9th	10th	FRINGE BENEFIT HOURLY RATE Total	Remarks See Pg 10-11
(Effective 7/3/16)													
* PLUMBER:													
PLUMBER; FIRE SPRINKLER FITTER; REFRIGERATION AIR CONDITIONING; STEAMFITTER-WELDER													
Indentured Prior to 9/2/85	1000	$14.30										$18.88	8,10
"	1000		$16.34									$19.35	8,10
"	1000			$18.38								$19.82	8,10
"	1000				$20.43							$20.29	8,10
"	1000					$22.47						$20.76	8,10
"	1000						$24.51					$21.23	8,10
"	1000							$26.55				$21.70	8,10
"	1000								$28.60			$22.17	8,10
"	1000									$30.64		$22.64	8,10
"	1000										$32.68	$23.10	8,10
Indentured On or After 9/2/85	1000	$16.42										$5.00	8,10
"	1000		$16.42									$5.05	8,10
"	1000			$19.40								$7.12	8,10
"	1000				$19.40							$7.12	8,10
"	1000					$22.47						$7.83	8,10
"	1000						$22.47					$7.83	8,10
"	1000							$26.55				$8.68	8,10
"	1000								$26.55			$8.68	8,10
"	1000									$30.64		$9.32	8,10
"	1000										$30.64	$9.32	8,10
ROOFER													
Indentured Prior to 11/1/98	1000	$17.48	$19.43	$23.31								$13.28	9
"	1000				$27.20	$31.08	$34.97	$36.91				$17.53	
Indentured On or After 11/1/98 and Prior to 11/4/12	1000	$17.48	$19.43	$23.31								$13.28	9
"	1000				$27.20	$31.08	$33.02	$34.97	$36.91			$17.53	
Indentured On or After 11/4/12	2000	$17.48	$23.31									$13.28	9
"	2000			$31.08	$34.97							$17.53	9

ROOFERS: Continued on Next Page

APPRENTICE SCHEDULE BULLETIN NO. 487 February 15, 2016

Rates are applicable only to apprentices who are parties to agreements registered with the Department of Labor and where the journeyworker to apprentice ratio is met.

Apprentice Classifications	Interval Hrs	BASIC HOURLY RATE 1st	2nd	3rd	4th	5th	6th	7th	8th	9th	10th	FRINGE BENEFIT HOURLY RATE Total	Remarks See Pg 10-11
(Effective 9/4/16)													
* ROOFER													
Indentured Prior to 11/1/98	1000	$17.93	$19.93	$23.91								$13.28	9
"	1000				$27.90	$31.88	$35.87	$37.86				$17.53	
Indentured On or After 11/1/98 and Prior to 11/4/12	1000	$17.93	$19.93	$23.91								$13.28	9
"	1000				$27.90	$31.88	$33.87	$35.87	$37.86			$17.53	
Indentured On or After 11/4/12	2000	$17.93	$23.91									$13.28	9
	2000			$31.88	$35.87							$17.53	9
SHEETMETAL WORKER	1000	$15.76										$11.40	10
"	1000		$17.73									$11.58	10
"	1000			$19.70								$19.29	10
"	1000				$21.67							$19.78	10
"	1000					$23.64						$20.26	10
"	1000						$25.61					$20.75	10
"	1000							$27.58				$21.23	10
"	1000								$29.55			$21.72	10
"	1000									$31.52		$22.20	10
"	1000										$33.49	$22.69	10
(Effective 2/28/16)													
* SHEETMETAL WORKER	1000	$16.00										$11.52	10
"	1000		$18.00									$11.70	10
"	1000			$20.00								$19.78	10
"	1000				$21.99							$20.26	10
"	1000					$23.99						$20.75	10
"	1000						$25.99					$21.26	10
"	1000							$27.99				$21.75	10
"	1000								$29.99			$22.23	10
"	1000									$31.99		$22.72	10
"	1000										$33.99	$23.22	10

SHEETMETAL WORKER: Continued on the next page

APPRENTICE SCHEDULE BULLETIN NO. 487 February 15, 2016

Rates are applicable only to apprentices who are parties to agreements registered with the Department of Labor and where the journeyworker to apprentice ratio is met.

Apprentice Classifications	Interval Hrs	BASIC HOURLY RATE 1st	2nd	3rd	4th	5th	6th	7th	8th	9th	10th	FRINGE BENEFIT HOURLY RATE Total	Remarks See Pg 10-11
(Effective 8/28/16)													
* SHEETMETAL WORKER	1000	$16.24										$11.65	10
"	1000		$18.27									$11.83	10
"	1000			$20.30								$20.30	10
"	1000				$22.32							$20.80	10
"	1000					$24.35						$21.30	10
"	1000						$26.38					$21.80	10
"	1000							$28.41				$22.30	10
"	1000								$30.44			$22.82	10
"	1000									$32.47		$23.31	10
"	1000										$34.50	$23.81	10
TAPER	1000	$16.60	$18.68	$20.75	$22.83	$24.90						$8.25	
	1000						$26.98					$8.75	
	1000							$31.13	$35.28			$11.80	
TELECOMMUNICATION WORKER													
(TECHNICIAN I / SPLICER)	1000	$15.78										$9.78	10
" "	1000		$17.10									$10.00	10
" "	1000			$18.41								$10.24	10
" "	1000				$19.73							$10.46	10
" "	1000					$21.04						$10.67	10
" "	1000						$23.67					$11.13	10
(Effective 8/28/16)													
* TELECOMMUNICATION WORKER													
(TECHNICIAN I / SPLICER)	1000	$16.41										$9.90	10
" "	1000		$17.78									$10.12	10
" "	1000			$19.15								$10.36	10
" "	1000				$20.51							$10.59	10
" "	1000					$21.88						$10.83	10
" "	1000						$24.62					$11.28	10
* TILE SETTER													
CERAMIC & HARD TILE													
Indentured Prior to 9/1/03	1000	$18.55										$7.12	2,10
"	1000		$20.41	$22.26	$25.97	$27.83	$29.68	$31.54	$33.39			$23.47	2,10
Indentured On or After 9/1/03	1000	$18.55	$20.41	$22.26	$25.97	$27.83	$29.68	$31.54	$33.39			$10.87	2,10

*** Indicates a wage, fringe benefit, remark, or title change from the previous bulletin.**

REMARKS:

1. Carpenter, Construction Craft Laborer: $.50 per hour shall be added to the regular straight-time rate for height pay for each hour while working from a bosun's chair and/or from a cable-suspended scaffold or work platform which is free swinging (not attached to building) for each hour worked on said rig.

2. Cement Finisher, Mason, Plasterer, Tile Setter: $1.00 per hour shall be added to the regular straight-time rate for height pay for each hour while working from a bosun's chair and/or from a cable-suspended scaffold or work platform which is free swinging (not attached to building) for each hour worked on said rig.

3. Construction Equipment Operator, Heavy Duty Repairer & Welder: $1.25 per hour shall be added to the hourly wage while operating a rig suspended by ropes or cables or to perform work on a Yo-Yo Cat.

4. Electrician:
   A. One and one-half times the straight-time rate while working in a tunnel under construction; under water with aqualung equipment; in a completed tunnel which has only one entrance or exit providing access to safety and where no other personnel are working; or in an underground structure having no access to safety or where no other personnel are working.
   B. Double the straight-time rate shall be paid for the following types of hazardous work regardless if fall prevention devices are used:
      1) While working from poles, trusses, stacks, towers, tanks, bosun's chairs, swinging or rolling scaffolds, supporting structures, and open platforms, over 70 feet from the ground where the employee is subject to a free fall; provided, however, that when work is performed on stacks, towers or permanent platforms where the employees are on a firm footing within an enclosure, a hazardous condition does not exist regardless of height;
      2) While working outside of a railing or enclosure, or temporary platforms extending outside of a building, or from scaffolding or ladder within an enclosure where an employee's footing is within one foot of the top of such railing, and the employee is subject to a free fall of over 70 feet;
      3) Working on buildings while leaning over the railing or edge of the building, and is subject to a free fall of 70 feet; or
      4) Two hours minimum hazardous pay per day shall be paid while climbing to a stack, tower or permanent platform which exceeds 70 feet from the ground but where the employee is on a firm footing within an enclosure.
   C. Five percent per hour shall be added to the hourly wage for height pay while working above 9,000 feet elevation.

5. Glazier: Effective 9/16/13 - $1.00 per hour shall be added to the hourly wage for height pay for exterior glazing work performed in a walking/working surface with an unprotected side or edge 10 feet or more above a lower level which requires protection from fall hazards by guardrail systems, safety net systems, personal fall arrest systems, position devise systems, fall restraint systems, perimeter safety cables or controlled decking zones.

6. Insulator: Six percent per hour shall be added to the hourly wage for hazardous pay while working from a boatswain chair, staging or free standing scaffolding erected from ground up or mezzanine floor subject to a free fall and skyclimber suspended from a permanent structure and when working above 40 feet.

7. Ironworker: $.50 per hour shall be added to the hourly wage while working in tunnels or coffer dams. $1.00 per hour shall be added to the hourly wage while working under or covered with water (submerged), or on the summits of Mauna Kea, Mauna Loa or Haleakala.

8. Plumber: One and one-half times the straight-time rate for height pay while working from OSHA approved trusses, stacks, towers, tanks, bosun's chair, swinging or rolling scaffolding, supporting structures or on open platforms where the employee is subject to a direct fall of 40 feet or more. Provided, however, that when said work is performed where the employee is on a firm footing within an enclosure, a hazardous condition does not exist regardless of height. $1.00 per hour shall be added to the straight-time rate while working with flame cutting or any type of welding equipment on any galvanized material or product for at least an hour.

9. Roofer: When an apprentice has accumulated 2500 hours, $4.25 will be added to his/her pension/annuity plan.
   The apprenticeship program for apprentices indentured on or after November 4, 2012, consists of four steps with 2,000 hours for each step.

REMARKS:

10. Overtime/Holiday must be paid at one and one-half times the basic hourly rate plus the hourly cost of required fringe, with the following exceptions:

A. ***Two times*** *the basic hourly rate plus the hourly cost of required fringe.*

Boilermaker: Sunday, New Year's Day, President's Day, Memorial Day, Kamehameha Day, July 4th, Labor Day, Veteran's Day, Thanksgiving Day and Christmas Day.

Construction Equipment Operator: Sunday, New Year's Day, Martin Luther King Day, Presidents' Day, Memorial Day, Kamehameha Day, Fourth of July, Labor Day, Veterans' Day, Thanksgiving Day and Christmas Day.

Electrician: Sunday, New Year's Day, Presidents' Day, Memorial Day, Kamehameha Day, Fourth of July, Labor Day, Thanksgiving Day and Christmas Day.

Elevator Constructor: Saturday, Sunday, New Year's Day, Memorial Day, Independence Day, Labor Day, Veterans' Day, Thanksgiving Day and Christmas Day.

Floor Layer: Labor Day.

Glazier: Sunday.

Heavy Duty Repairer & Welder: Sunday, New Year's Day, Martin Luther King Day, Presidents' Day, Memorial Day, Kamehameha Day, Fourth of July, Labor Day, Veterans' Day, Thanksgiving Day and Christmas Day.

Ironworker: Sunday, New Year's Day, Presidents' Day, Memorial Day, Kamehameha Day, Fourth of July, Labor Day, Veteran's Day, Thanksgiving Day and Christmas Day.

Paving Equipment Operator: Sunday, New Year's Day, Martin Luther King Day, Presidents' Day, Memorial Day, Kamehameha Day, Fourth of July, Labor Day, Veterans' Day, Thanksgiving Day and Christmas Day.

Plumber: Sunday, New Year's Day, Martin Luther King Day, President's Day, Memorial Day, Kamehameha Day, Independence Day, Labor Day, Veteran's Day, Thanksgiving Day and Christmas Day.

Sheetmetal Worker: Sunday, New Year's Day, Martin Luther King Day, President's Day, Memorial Day, Kamehameha Day, Independence Day, Labor Day, Veteran's Day, Thanksgiving Day and Christmas Day.

Telecommunication Worker: Sunday, New Year's Day, Presidents' Day, Memorial Day, Independence Day, Labor Day, Thanksgiving Day and Christmas Day.

B. ***Three times*** *the basic hourly wage plus the hourly cost of required fringe* ***on Labor Day****.*

Carpenter
Cement Finisher
Drywall Installer
Insulator
Construction Craft Laborer
Mason
Plasterer
Tile Setter

STATE OF HAWAII
DEPARTMENT OF LABOR AND INDUSTRIAL RELATIONS

List of Construction Trades in Registered Apprenticeship Programs

Apprenticeship programs for the following construction trades were approved and registered by the State Department of Labor and Industrial Relations in accordance with Chapter 372, Hawaii Revised Statutes, and Title 12, Chapter 30, Hawaii Administrative Rules. Union and non-union programs are listed separately. The minimum requirements are not exclusive as a program sponsor may add other requirements in their selection procedures.

Trade	Sponsor	Union	Non-Union	Date of Approval/ Registration	No. of Hours of On-the-Job Training	Minimum Requirements	Contact Information
Boilermaker	**Western State Area Joint Apprenticeship Committee** **(International Brotherhood of Boilermakers, Iron Ship Builders, Blacksmith, Forgers, and Helpers and Subordinate, Lodge No. 627, AFL-CIO, and the Western States Joint Apprenticeship Committee, and Association of Boilermaker Employers)**	**x**		**03/18/1991**	**6,000**	• **At least 18 years old** • **High school graduate or GED equivalent**	Business Manager Address: 1414 Dillingham Blvd, Room 205 Honolulu, HI 96817 Phone: (808) 848-7744 Fax: (808) 848-0311
Bricklayer-Mason	**Joint Apprenticeship Committee for Bricklayer-Mason** **(Masonry Contractors Association of Hawaii and Other Signatory Employers and Local 1 of Hawaii of the Bricklayers and Allied Craftsmen International Union, AFL-CIO)**	**x**		**02/10/64**	**8,000**	• **At least 16 years old** • **Physically able to perform duties of the trade**	Director of Training or Training Coordinator Address: 2251 N. School Street Honolulu, HI 96819 Phone: (808) 845-5949 Fax: (808) 847-7068 Website: http://www.opcmia.org/

Trade	Sponsor	Union	Non-Union	Date of Approval/ Registration	No. of Hours of On-the-Job Training	Minimum Requirements	Contact Information
Carpenter	**Carpenters Joint Apprenticeship Committee *aka* Hawaii Carpenters Apprenticeship and Training Program** **(General Contractors Association of Hawaii and Building Industry Labor Association and Other Signatory Contractors and the United Brotherhood of Carpenters and Joiners of America, Local 745 AFL-CIO)**	**x**		**04/01/64**	**8,000**	• **At least 17 years old** • **High school diploma or equivalent education, or equivalent work experience** • **Pass basic math test** • **Complete questionnaire** • **Able to lift 75 lbs.**	Director of Training Address: 1311 Houghtailing Street Room 201 Honolulu, HI 96817 Phone: (808) 848-0794 Ext. 5 Fax: (808) 841-5961 (808) 841-0300 Website: http://www.carpenters.org/
Carpenter	**Associated Builders and Contractors Apprenticeship Committee**		**x**	**02/08/90**	**8,000**	• **At least 18 years old** • **High school diploma or GED** • **Full-time employee of a member company for a period of not less than six continuous weeks** • **Legally able to work** • **Physically able to perform duties of the trade**	Director of Training Address: 1375 Dillingham Blvd. Suite 200 Honolulu, HI 96817 Phone: (808) 845-4887 Fax: (808) 847-7876 Website: http://www.abchawaii.org/
Cement Finisher	**Joint Apprenticeship Committee for Cement Finishers** **(Operative Plasterers and Cement Finishers International Association, Local 630, AFL-CIO, and Local 1 of the International Union of Bricklayers and Allied Craftsmen, AFL-CIO)**	**x**		**04/01/61**	**8,000**	• **At least 16 years old** • **Physically able to perform duties of the trade**	Director of Training or Training Coordinator Address: 2251 N. School Street Honolulu, HI 96819 Phone: (808) 845-5949 Fax: (808) 847-7068 Website: http://www.opcmia.org/
Construction Craft Laborer	**Hawaii Laborers' Joint Apprenticeship Committee** **(International Union of North America, Local 368, and Signatory Contractors Association)**	**x**		**02/11/00**	**4,000**	• **At least 18 years old** • **High school diploma or GED** • **Driver's license** • **Successfully complete Pre-Construction Apprentice Evaluation Course**	Apprenticeship Coordinator Address: 96-138 Farrington Hwy. Pearl City, HI 96782 Phone: (808) 455-7979 Fax: (808) 456-8689 Website: http://www.liuna.org/

Trade	Sponsor	Union	Non-Union	Date of Approval/ Registration	No. of Hours of On-the-Job Training	Minimum Requirements	Contact Information
Construction Equipment Operator	**Hawaii Joint Apprenticeship Committee for Operating Engineers** **(General Contractors Labor Association and the Building Industry Labor Association and International Union of Operating Engineers, Local Union #3, AFL-CIO)**	**x**		**11/14/67**	**6,000**	• **At least 18 years old** • **High school diploma or GED or C-based test** • **Physically able to perform duties of the trade** • **School transcripts** • **Driver's license** • **Current State DOT PUC physical** • **Pass industry or general knowledge test** • **Have reliable transportation**	State Administrator Address: P.O. Box 428 Kahuku, HI 96731-0428 Phone: (808) 232-2001 Fax: (808) 232-2217 Website: http://oe3.org/training/
Drywall	**Carpenters Joint Apprenticeship Committee *aka* Hawaii Carpenters Apprenticeship and Training Program** **(General Contractors Association of Hawaii and Building Industry Labor Association and Other Signatory Contractors and the United Brotherhood of Carpenters and Joiners of America, Local 745, AFL-CIO)**	**x**		**04/06/88**	**8,000**	• **At least 17 years old** • **High school diploma or GED** • **Complete questionnaire** • **Pass industry test (8th grade math)** • **Able to lift 100 lbs.**	Director of Training Address: 1311 Houghtailing Street Room 201 Honolulu, HI 96817 Phone: (808) 848-0794 Ext. 5 Fax: (808) 848-5961 (808) 841-0300 Website: http://www.carpenters.org/
Electrical Wireperson	**PECA-HEW Joint Apprenticeship Committee** **(Pacific Electrical Contractors Association and the Hawaii Electrical Workers Division of Laborers International, Local 368)**	**x**		**11/20/91**	**10,000**	• **At least 16 years old** • **High school diploma or GED** • **Pass color code test** • **Transcript of high school or post high school courses** • **Pass one-year high school Algebra 1 (not pre-Algebra) or higher**	Training Coordinator Address: 1130 Nimitz Highway Suite 204 Honolulu, HI 96817 Phone: (808) 845-1986 Fax: (808) 847-7829 Website: N/A

Trade	Sponsor	Union	Non-Union	Date of Approval/ Registration	No. of Hours of On-the-Job Training	Minimum Requirements	Contact Information
Electrician	**Associated Builders and Contractors Apprenticeship Committee**		**x**	**02/08/90**	**10,000**	• **At least 18 years old** • **High school diploma or GED** • **Full-time employee of a member company for a period of not less than six continuous weeks** • **Legally able to work** • **Physically able to perform duties of the trade** • **Pass eye examination for color blindness** • **Completed one-year high school algebra (not pre-algebra)**	Director of Training Address: 1375 Dillingham Blvd. Suite 200 Honolulu, HI 96817 Phone: (808) 845-4887 Fax: (808) 847-7876 Website: http://www.abchawaii.org/
(Electrician) Wireperson	**Hawaii Electricians Joint Apprenticeship Committee** **(International Brotherhood of Electrical Workers (IBEW) Local 1186, AFL-CIO, and Signatory Employers)**	**x**		**04/08/47**	**10,000**	• **At least 18 years old** • **High school diploma or GED** • **Complete the National Joint Apprenticeship and Training Committee Math Course or one-year high school Algebra 1** • **Transcript of high school or post high school courses** • **Pass industry aptitude test to qualify for oral interview** • **Application fee (non-refundable)**	Apprenticeship or Training Coordinator Address: 1935 Hau Street Room 301 Honolulu, HI 96819 Phone: (808) 847-0629 Fax: (808) 843-8818 Website: http://www.njatc.org/
Elevator Constructor	**International Union of Elevator Constructors Local 126 Joint Apprenticeship Committee** **(International Union of Elevator Constructors, Local 126 and Signatory Employers)**	**x**		**03/27/03**	**6,800**	• **At least 18 years old** • **High school diploma or GED** • **School transcripts** • **Pass aptitude test (math, reading)** • **Pass medical exam** • **Physically able to perform duties of the trade**	Business Representative Address: 707 Alakea Street Room 314 Honolulu, HI 96813 Phone: (808) 536-8653 Fax: (808) 537-3779 Website: http://iuec.org/

Trade	Sponsor	Union	Non-Union	Date of Approval/ Registration	No. of Hours of On-the-Job Training	Minimum Requirements	Contact Information
Fire Sprinkler Fitter	**Honolulu Joint Apprenticeship and Training Committee for the Plumbing and Pipefitting Industry *aka* JATC of UA Plumbers and Fitters, Local 675, AFL-CIO, and PAMCAH** **(Plumbing and Mechanical Contractors Association of Hawaii and United Association of Plumbers and Pipefitters Local 675, AFL-CIO)**	**x**		**10/19/92**	**10,000**	• **At least 17 years old** • **High school diploma or GED** • **School transcripts** • **Pass placement evaluation with minimum score of 70%** • **Driver's license**	Training Coordinator Address: 97-731 B Kamehameha Hwy. Pearl City, HI 96782 Phone: (808) 456-0585 Fax: (808) 456-7131 Website: http://www.ua.org/
Floor Layer	**Joint Apprenticeship and Training Committee for Floor Layers** **(Hawaii Floor Covering Association and Carpet, Linoleum, and Soft Tile Union Local 1926, AFL-CIO)**	**x**		**02/17/66**	**8,000**	• **At least 17 years old** • **Driver's license** • **Pass color vision test**	Training Coordinator Address: 2240 Young Street Honolulu, HI 96826 Phone: (808) 942-3988 Fax: (808) 946-6667 Website: http://www.iupat.org/
Glazier	**Joint Apprenticeship Committee for Glaziers, Architectural Metal and Glassworkers Industry *aka* Glaziers, Architectural Metal and Glassworkers JATC** **(Glass/Metal Contractors Association of Hawaii and Other Signatory Contractors and the Glaziers, Architectural Metal and Glassworkers Union Local 1889, AFL-CIO)**	**x**		**04/01/01**	**10,000**	• **At least 16 years old** • **High school diploma or GED** • **Driver's license** • **Physically able to perform duties of the trade**	Training Coordinator Address: 2240 Young Street Honolulu, HI 96826 Phone: (808) 946-3329 (808) 943-0757 Fax: (808) 946-8736 Website: http://www.iupat.org/
Heat and Frost Asbestos Insulator	**Honolulu Joint Apprenticeship Committee for the Heat and Frost Asbestos Insulator Trade** **(Heat and Frost Insulators and Asbestos Workers, Local 132, and Signatory Participating Employers)**	**x**		**07/23/71**	**10,000**	• **At least 16 years old** • **High school diploma or GED** • **Physically able to perform duties of the trade**	Training Coordinator Address: 1019 Lauia Street Bay #4 Kapolei, HI 96707 Phone: (808) 521-6405 Fax: (808) 523-9861 Website: http://www.insulators.org/

Trade	Sponsor	Union	Non-Union	Date of Approval/ Registration	No. of Hours of On-the-Job Training	Minimum Requirements	Contact Information
Heavy Duty Repairman and Welder	**Hawaii Joint Apprenticeship Committee for Operating Engineers** **(General Contractors Labor Association and the Building Industry Labor Association and International Union of Operating Engineers, Local Union #3, AFL-CIO)**	**x**		**11/14/67**	**8,000**	• **At least 18 years old** • **High school diploma or GED or C-based test** • **Physically able to perform duties of the trade** • **School transcripts** • **Driver's license** • **Current State DOT PUC physical** • **Pass industry or general knowledge test** • **Have reliable transportation**	State Administrator Address: P.O. Box 428 Kahuku, HI 96731-0428 Phone: (808) 232-2001 Fax: (808) 232-2217 Website: http://oe3.org/training/
Ironworker Shop Fabricator / Welder	**Hawaii Shopmen's Local 803 Joint Apprenticeship and Training Committee** **(International Association of Bridge, Structural and Ornamental Ironworkers, Local 803, AFL-CIO, and Participating Employers)**	**x**		**12/31/63**	**8,000**	• **At least 18 years old** • **High school diploma or GED** • **Physically able to perform duties of the trade** • **Must be sponsored by employer who is signatory to the Shopmen's Local 803 collective bargaining agreement**	Training Coordinator Address: 94-497 Ukee Street Waipahu, HI 96797 Phone: (808) 671-4344 Fax: (808) 676-1144 Website: http://www.ironworkers.org/
Ironworker (Reinforcing)	**Joint Apprenticeship Committee for Ironworker (Reinforcing) *aka* Ironworkers Joint Apprenticeship Committee (Reinforcing)** **(International Association of Bridge, Structural and Ornamental Ironworkers, Local 625, AFL-CIO and Participating Employers)**	**x**		**06/26/53**	**6,000**	• **At least 16 years old** • **Physically able to perform duties of the trade**	Training Coordinator Address: 94-497 Ukee Street Waipahu, HI 96797 Phone: (808) 671-8225 Fax: (808) 676-1144 Website: http://www.ironworkers.org/

Trade	Sponsor	Union	Non-Union	Date of Approval/ Registration	No. of Hours of On-the-Job Training	Minimum Requirements	Contact Information
Ironworker (Structural)	**Joint Apprenticeship Committee for Ironworker (Structural) *aka* Ironworkers Joint Apprenticeship Committee (Structural)** **(International Association of Bridge, Structural and Ornamental Ironworkers, Local 625, AFL-CIO and Participating Employers)**	**x**		**03/01/61**	**6,000**	• **At least 16 years old** • **Physically able to perform duties of the trade**	Training Coordinator Address: 94-497 Ukee Street Waipahu, HI 96797 Phone: (808) 671-8225 Fax: (808) 676-1144 Website: http://www.ironworkers.org/
Painter	**Joint Apprenticeship and Training Committee for Painters** **(Painting and Decorating Contractors of Hawaii (PDCA) and the International Union of Painters and Allied Trades (IUPAT) Local 1791, AFL-CIO)**	**x**		**09/01/61**	**8,000**	• **At least 16 years old** • **High school diploma or GED** • **Driver's license** • **Physically able to perform the duties of the trade** • **Pass color code vision test**	Training Coordinator Address: 2240 Young Street Honolulu, HI 96826 Phone: (808) 947-6606 Fax: (808) 942-0195 Websites: http://www.dc50.org/ http://www.iupat.org/
Painter	**Associated Builders and Contractors Apprenticeship Committee**		**x**	**05/02/90**	**8,000**	• **At least 18 years old** • **Full-time employee of a member company for a period of not less than six continuous weeks** • **Legally able to work** • **Physically able to perform duties of the trade** • **Pass physical examination if required by Committee**	Director of Training Address: 1375 Dillingham Blvd. Suite 200 Honolulu, HI 96817 Phone: (808) 845-4887 Fax: (808) 847-7876 Website: http://www.abchawaii.org/
Painter	**Color Dynamics, Inc.**		**x**	**12/01/89**	**8,000**	• **At least 16 years old** • **Physically fit to perform duties of the trade** • **Must not be color blind**	President Address: 816 Gulick Avenue Honolulu, HI 96819 Phone: (808) 848-7000 Fax: (808) 842-0800 Website: http://www.colordynamics.com

Trade	Sponsor	Union	Non-Union	Date of Approval/ Registration	No. of Hours of On-the-Job Training	Minimum Requirements	Contact Information
Painter	**Kawika's Painting**		**x**	**10/01/84**	**8,000**	• **At least 16 years old** • **Physically fit to perform duties of the trade** • **Must not be color blind**	President Address: 2147 Eluwene Street Honolulu, HI 96819 Phone: (808) 848-0003 Fax: (808) 842-1908 Website: http://www.kawikaspainting.com
Paving Equipment Operator	**Hawaii Joint Apprenticeship Committee for Operating Engineers** **(General Contractors Labor Association and the Building Industry Labor Association and International Union of Operating Engineers, Local Union #3, AFL-CIO)**	**x**		**04/29/10**	**4,000**	• **At least 18 years old** • **High school diploma or GED or C-based test** • **Physically able to perform duties of the trade** • **School transcripts** • **Driver's license** • **Current State DOT PUC physical** • **Pass industry or general knowledge test** • **Have reliable transportation**	State Administrator Address: P.O. Box 428 Kahuku, HI 96731-0428 Phone: (808) 232-2001 Fax: (808) 232-2217 Website: http://oe3.org/training/
Plasterer	**Joint Apprenticeship Committee for Plasterers** **(Pacific Bureau for Lathing and Plastering and the Operative Plasterers and Cement Finishers Association of the U.S. and Canada, Local 630, AFL-CIO)**	**x**		**06/30/59**	**8,000**	• **At least 16 years old** • **Physically able to perform duties of the trade**	Director of Training Address: 2251 N. School Street Honolulu, HI 96819 Phone: (808) 845-5949 Fax: (808) 847-7068 Website: http://www.opcmia.org/
Plumber	**Honolulu Joint Apprenticeship and Training Committee for the Plumbing and Pipefitting Industry *aka* JATC of UA Plumbers and Fitters, Local 675, AFL-CIO, and PAMCAH** **(Plumbing and Mechanical Contractors Association of Hawaii and United Association of Plumbers and Pipefitters Local 675, AFL-CIO)**	**x**		**11/14/52**	**10,000**	• **At least 17 years old** • **High school diploma or GED** • **School transcripts** • **Pass placement evaluation with a minimum score of 70%** • **Driver's license**	Training Coordinator Address: 97-731 B Kamehameha Hwy. Pearl City, HI 96782 Phone: (808) 456-0585 Fax: (808) 456-7131 Website: http://www.ua.org/

Trade	Sponsor	Union	Non-Union	Date of Approval/ Registration	No. of Hours of On-the-Job Training	Minimum Requirements	Contact Information
Plumber	**Associated Builders and Contractors Apprenticeship Committee**	**x**		**02/02/99**	**10,000**	• **At least 18 years old** • **Full-time employee of a member company for a period of not less than six continuous weeks** • **Legally able to work** • **Physically able to perform duties of the trade** • **Pass physical examination if required by Committee**	Director of Training Address: 1375 Dillingham Blvd. Suite 200 Honolulu, HI 96817 Phone: (808) 845-4887 Fax: (808) 847-7876 Website: http://www.abchawaii.org/
Pointer-Caulker-Weatherproofer	**Joint Apprenticeship Committee for Pointer-Caulker-Weatherproofer** **(Pointing, Caulking and Weatherproofing Contractors and the International Union of Bricklayers and Allied Crafts, Local 1, AFL-CIO)**	**x**		**08/23/95**	**6,000**	• **At least 16 years old** • **Physically able to perform duties of the trade**	Director of Training or Training Coordinator Address: 2251 N. School Street Honolulu, HI 96819 Phone: (808) 845-5949 Fax: (808) 847-7068 Website: http://www.opcmia.org/
Refrigeration Air-Conditioning	**Honolulu Joint Apprenticeship and Training Committee for the Plumbing and Pipefitting Industry *aka* JATC of UA Plumbers and Fitters, Local 675, AFL-CIO, and PAMCAH** **(Plumbing and Mechanical Contractors Association of Hawaii and United Association of Plumbers and Pipefitters Local 675, AFL-CIO)**	**x**		**09/04/62**	**10,000**	• **At least 17 years old** • **High school diploma or GED** • **School transcripts** • **Pass placement evaluation with a minimum score of 70%** • **Driver's license**	Training Coordinator Address: 97-731 B Kamehameha Hwy. Pearl City, HI 96782 Phone: (808) 456-0585 Fax: (808) 456-7131 Website: http://www.ua.org/
Roofer	**Joint Apprenticeship and Training Committee for Roofers** **(United Union of Roofers, Waterproofers and Allied Workers, AFL-CIO, Local 221, and All Participating Employers)**	**x**		**01/13/68**	**8,000**	• **At least 16 years old** • **High school diploma or GED** • **Driver's license** • **Physically able to perform duties of the trade** • **Able to lift 100 lbs.**	Training Director Address: 2045 Kamehameha IV Rd. Room 203 Honolulu, HI 96819 Phone: (808) 847-5757 Fax: (808) 848-8707 Website: http://www.unionroofers.com

Trade	Sponsor	Union	Non-Union	Date of Approval/ Registration	No. of Hours of On-the-Job Training	Minimum Requirements	Contact Information
Roofer	**Associated Builders and Contractors Apprenticeship Committee**		**x**	**01/09/96**	**7,000**	• **At least 18 years old** • **Full-time employee of a member company for a period of not less than six continuous weeks** • **Legally able to work** • **Physically able to perform duties of the trade** • **Pass physical examination if required by Committee**	Director of Training Address: 1375 Dillingham Blvd. Suite 200 Honolulu, HI 96817 Phone: (808) 845-4887 Fax: (808) 847-7876 Website: http://www.abchawaii.org/
Sheet Metal Worker	**Hawaii Joint Apprenticeship Committee for the Sheet Metal Industry** **(Sheet Metal Contractor's Association and Sheet Metal Workers' International Association, Local 293)**	**x**		**01/02/58**	**10,000**	• **At least 18 years old** • **High school diploma or GED** • **Driver's license**	Apprenticeship Coordinator Address: 1405 North King Street Room 403 Honolulu, HI 96817 Phone: (808) 841-6106 Fax: (808) 841-1842 Website: http://www.smwia.org/
Steamfitter/ Welder	**Honolulu Joint Apprenticeship and Training Committee for the Plumbing and Pipefitting Industry *aka* JATC of UA Plumbers and Fitters, Local 675, AFL-CIO, and PAMCAH** **(Plumbing and Mechanical Contractors Association of Hawaii and United Association of Plumbers and Pipefitters Local 675, AFL-CIO)**	**x**		**02/05/02**	**10,000**	• **At least 17 years old** • **High school diploma or GED** • **School transcripts** • **Pass placement evaluation with a minimum score of 70%** • **Driver's license**	Training Coordinator Address: 97-731 B Kamehameha Hwy. Pearl City, HI 96782 Phone: (808) 456-0585 Fax: (808) 456-7131 Website: http://www.ua.org/
Stone Mason	**Joint Apprenticeship Committee for Stone Mason Industry** **(Masonry Contractors Association of Hawaii and Local 1 of Hawaii of the Bricklayers and Allied Craftsmen International Union, AFL-CIO, and Other Signatory Employers)**	**x**		**02/10/64**	**8,000**	• **At least 16 years old** • **Physically able to perform duties of the trade**	Director of Training or Training Coordinator Address: 2251 N. School Street Honolulu, HI 96819 Phone: (808) 845-5949 Fax: (808) 847-7068 Website: http://www.opcmia.org/

Trade	Sponsor	Union	Non-Union	Date of Approval/ Registration	No. of Hours of On-the-Job Training	Minimum Requirements	Contact Information
Taper	**Joint Apprenticeship Committee for Tapers** **(Gypsum Drywall Contractors Association of Hawaii and the International Brotherhood of Painters and Allied Trades Tapers Local Union 1944, AFL-CIO)**	**x**		**09/01/67**	**8,000**	• **At least 16 years old** • **Physically able to perform duties of the trade**	Chairman Address: 2240 Young Street Honolulu, HI 96826 Phone: (808) 946-6621 Fax: (808) 946-6623 Website: http://www.dc50.org/
Telecommunication / CATV Installer Technician	**Hawaii Electricians Joint Apprenticeship Committee** **aka** **Joint Apprenticeship Committee for Telecommunications** **(International Brotherhood of Electrical Workers Local Union 1186, AFL-CIO, and Signatory Employers)**	**x**		**09/16/98**	**6,000**	• **At least 16 years old** • **High school diploma or equivalent or GED** • **High school transcript** • **Pass color code test** • **Physically fit to perform duties of the trade** • **One-year satisfactory completion of high school algebra (not Pre-Algebra)**	Apprenticeship or Training Coordinator Address: 1935 Hau Street Room 301 Honolulu, HI 96819 Phone: (808) 847-0629 Fax: (808) 843-8818 Website: http://www.njatc.org/
Tile Setter	**Joint Apprenticeship Committee for Tile Setters** **(Tile, Marble and Terrazo Contractors Association of Hawaii and Local 1 of Hawaii of the Bricklayers, and Allied Craftsmen International Union of America, AFL-CIO)**	**x**		**06/24/58**	**8,000**	• **At least 16 years old** • **Physically able to perform duties of the trade**	Director of Training or Training Coordinator Address: 2251 N. School Street Honolulu, HI 96819 Phone: (808) 845-5949 Fax: (808) 847-7068 Website: http://www.opcmia.org/

Trade	Sponsor	Union	Non-Union	Date of Approval/ Registration	No. of Hours of On-the-Job Training	Minimum Requirements	Contact Information
Truck Operator and Driver	**Hawaii Joint Apprenticeship Committee for Operating Engineers** **(General Contractors Labor Association and the Building Industry Labor Association and International Union of Operating Engineers, Local Union #3, AFL-CIO)**	**x**		**03/01/91**	**2,000**	• **At least 18 years old** • **High school diploma or GED or C-based test** • **Physically able to perform duties of the trade** • **School transcripts** • **Driver's license** • **Current State DOT PUC physical** • **Pass industry or general knowledge test** • **Have reliable transportation**	State Administrator Address: P.O. Box 428 Kahuku, HI 96731-0428 Phone: (808) 232-2001 Fax: (808) 232-2217 Website: http://oe3.org/training/

Years 2016 and 2017

Holidays to be observed by the

HAWAII STATE GOVERNMENT

www.dhrd.hawaii.gov

Website where State Holiday Schedule posted

Year 2016 HAWAII STATE HOLIDAYS

(Hawaii Rev. Statutes, Sec. 8-1)	Day Observed in 2016	Official Date Designated in Statute/Constitution
New Year's Day	Jan. 1 Friday	The first day in January
Dr. Martin Luther King, Jr. Day	Jan. 18 Monday	The third Monday in January
Presidents' Day	Feb. 15 Monday	The third Monday in February
Prince Jonah Kuhio Kalanianaole Day	Mar. 25 Friday	The twenty-sixth day in March
Good Friday	Mar. 25 Friday	The Friday preceding Easter Sunday
Memorial Day	May 30 Monday	The last Monday in May
King Kamehameha I Day	June 10 Friday	The eleventh day in June
Independence Day	July 4 Monday	The fourth day in July
Statehood Day	Aug. 19 Friday	The third Friday in August
Labor Day	Sept. 5 Monday	The first Monday in September
General Election Day	Nov. 8 Tuesday	The first Tuesday in Nov. following the first Monday of even-numbered years. *(Hawaii State Constitution, Article 2 – Section 8)*
Veterans' Day	Nov. 11 Friday	The eleventh day in November
Thanksgiving	Nov. 24 Thursday	The fourth Thursday in November
Christmas	Dec. 26 Monday	The twenty-fifth day in December

Year 2017 HAWAII STATE HOLIDAYS

(Hawaii Rev. Statutes, Sec. 8-1)	Day Observed in 2017	Official Date Designated in Statute/Constitution
New Year's Day	Jan. 2 Monday	The first day in January
Dr. Martin Luther King, Jr. Day	Jan. 16 Monday	The third Monday in January
Presidents' Day	Feb. 20 Monday	The third Monday in February
Prince Jonah Kuhio Kalanianaole Day	Mar. 27 Monday	The twenty-sixth day in March
Good Friday	April 14 Friday	The Friday preceding Easter Sunday
Memorial Day	May 29 Monday	The last Monday in May
King Kamehameha I Day	June 12 Monday	The eleventh day in June
Independence Day	July 4 Tuesday	The fourth day in July
Statehood Day	Aug. 18 Friday	The third Friday in August
Labor Day	Sept. 4 Monday	The first Monday in September
Veterans' Day	Nov. 10 Friday	The eleventh day in November
Thanksgiving	Nov. 23 Thursday	The fourth Thursday in November
Christmas	Dec. 25 Monday	The twenty-fifth day in December

FOOTNOTES: For use solely by State government agencies. Federal government and local banking holidays may differ. For State agencies that operate on other than Monday-Friday 7:45 AM to 4:30 PM schedules, also refer to appropriate collective bargaining agreements. Created by the Department of Human Resources Development 8/11/2015; subject to change.

STATE OF HAWAII

DEPARTMENT OF HAWAIIAN HOME LANDS
91-5420 Kapolei Parkway,
Kapolei, HI. 96707

TECHNICAL SPECIFICATIONS

FOR

FURNISHING LABOR AND MATERIALS FOR

Scattered Lot Improvements for

Five Keaukaha Lots in Tract 1

WAIAKEA, SOUTH HILO, ISLAND OF HAWAII, STATE OF HAWAII,

IFB No.: IFB-16-HHL-014

APRIL 2016

DIVISION 1 – GENERAL REQUIREMENTS

SECTION 00850 – DRAWING INDEX

1.01 CONTRACT DRAWINGS AND SPECIFICATONS

A. The Contractor shall:

1. Check all drawings furnished immediately upon receipt;

2. Compare all drawings and verify the figures before laying out the work;

3. Promptly notify the DHHL of any discrepancies; and

4. Be responsible for any errors which might have been avoided by complying with this paragraph B.

B. Large scale drawings shall govern over small scale drawings. Figures marked on drawings shall be followed in preference to scale measurements.

C. Omissions from the drawings or specifications or the incorrect description of details of work which are manifestly necessary to carry out the intent of the drawings and specifications, or which are customarily performed, shall not relieve the Contractor from performing such omitted or misdescribed details of the work. Any omission shall be performed as if fully and correctly set forth and described in the drawings and specifications.

D. The work shall conform to the specifications and the contract drawings on the following index of drawings:

INDEX

DESCRIPTION	PLAN SHEET NO.
LOT 58	1 THRU 10
LOT 59	1 THRU 09
LOT 63	1 THRU 12
LOT 131	1 THRU 14
LOT 279	1 THRU 09

END OF SECTION

SECTION 01010 – SUMMARY OF WORK

PART 1 – GENERAL

1.01 RELATED DOCUMENTS

The General Provisions and the Special Provisions apply to this Section. Special attention is directed to the Proposal Schedule.

1.02 SUMMARY

Section Includes:

1. Scope of Work
2. Vehicle Parking
3. Provisions for Field Office/Storage Space
4. Location of the Work
5. Hours of work
6. Safety
7. Disposal of excess soil materials
8. Construction stakes, lines and grades
9. Special project requirements
10. Unforeseen Conditions Allowances

1.03 SCOPE OF WORK – SITE WORK

A. LOT 58-B-1 AND LOT 58-B-2

1. Clearing and Grub;
2. Plumbing – Sanitary Sewer Lateral, and Water Lateral;
3. Site Preparation – Excavation and Embankment, Drainage System Construction;
4. Installation of Chain-Link Fence to Separate the Subdivided Lots; and
5. Fill in Existing Cesspool.

B. LOT 59-B-1 AND LOT 59-B-2

1. Clearing and Grub;
2. Site Preparation – Excavation and Embankment, Drainage System Construction; and
3. Electrical – Utility Pole Installation.

C. LOT 63-A AND LOT 63 -B

1. Clearing and Grub;
2. Plumbing – Sanitary Sewer, Force Main, and Water Lateral;

3. Site Preparation – Excavation & Embankment, Drainage System Construction;
4. Electrical – Utility Pole Installation; and
5. Install Lift Pump & Station for Sewer Line in Back Lot.

D. LOT 131-A-1 AND LOT 131-A-2 and LOT 131-A-3

1. Clearing and Grub;
2. Plumbing – Sanitary Sewer, Lateral, and Water Laterals;
3. Site Preparation – Excavation and Embankment, Drainage System Construction;
4. Electrical – Utility Pole Installation; and
5. Installation of Chain-Link Fence between subject property and Lot 130-A.

E. LOT 279-A AND LOT 279-B

1. Clearing and Grub;
2. Site Preparation – Excavation and Embankment, Drainage System Construction; and
3. Electrical – Utility Pole Installation.

1.04 VEHICLE PARKING

Subject to availability of space and approval by the DHHL EAST Hawaii District Supervisor, parking may be made available at a designated parking structure for vehicle parking. The General Contractor shall submit the parking request to the DHHL East Hawaii District Supervisor.

1.05 PROVISIONS FOR FIELD OFFICE/STORAGE SPACE

Pending the availability of space on DHHL property, the State will issue a permit to the Contractor for the use of the space, at no charge, to be used specifically for a field office and/or storage of materials and equipment. Since space on DHHL property is limited, the State does not guarantee that the space provided to the Contractor will be in close proximity to the project site. The State will make every effort to provide the Contractor with space on DHHL property, however, should the State determine that no space is available for such use(s), the responsibility shall then be on the Contractor to find space outside of DHHL property.

1.06 LOCATION OF THE WORK

A. The work to be performed under this contract is located at DHHL East Hawaii District office, Hilo, Hawaii. Refer to the project plans for the jobsite location.

B. Conditions: Upon award of the contract, the Contractor, at their cost, shall obtain all permits required for this project.

1.07 HOURS OF WORK

A. Work can be performed at the construction site between 8:00 am and 4:30 pm, Monday through Friday. Submit a proposed construction schedule to Project Manager for review and approval within 14 calendar days prior to start of work. The Contractor shall coordinate their schedule with the Project Manager if rescheduling of work or intermittent work is required, such work shall be performed at no extra cost to the State. If the Contractor's obligation to pay.

B. Contractor shall clean work areas at the end of each working shift. Rubbish, loose materials, etc. shall be disposed of daily. Materials shall be safely secured and stored in an area designated by the DHHL East Hawaii District Supervisor.

1.08 SAFETY

A. The Contractor shall take the necessary precautions to protect his workers and other personnel from injuries. The rules and regulations promulgated by the Occupational Safety and Health Acts are applicable and made a part of these specifications.

B. Barricades and warning signs shall be erected by the Contractor in the work area to properly protect all personnel in the area.

C. During the progress of the work debris, empty crates, waste, material drippings, etc., shall be removed by the Contractor at the end of each work day, and the work area shall be left clean and orderly.

1.09 DISPOSAL OF EXCESS SOIL MATERIALS

A. At the Construction Manager and/or Engineers discretion, excess useable soil materials may be used as fill material for this project. Best Management Practices shall be employed at all times to control soil erosion and water pollution that may result from stockpiling activities.

B. Off-Site Disposal of Excess Soil Material: Any excess soil material and rubbish disposed of outside the DHHL property shall be the responsibility of the Contractor. The Contractor shall make all arrangements and bear all costs involved therewith.

1.10 CONSTRUCTION STAKES, LINES AND GRADES

A. The Contractor shall perform all construction layout and reference staking necessary for the proper control and satisfactory completion of all structures, grading, paving, drainage, sewer, water, and all other appurtenances required for the completion of the work.

B. Existing horizontal and vertical survey control points for the project are shown on the plans. The Contractor shall verify the location of all control points prior to the start of construction.

C. The Department will not be responsible for delays in setting stakes and marks.

D. All control points and stakes or marks which the Project Manager may set shall be preserved by the Contractor. If such control points, stakes or marks are destroyed or disturbed by the Contractor, the cost of replacing such stakes or marks will be charged against the Contractor and deducted from payments due the Contractor.

E. The Contractor shall be responsible for the placement and preservation of adequate ties to all control points whether established by the Contractor or by the Project Manager.

F. All original, additional or replacement stakes, marks, references and batter-boards which may be required for the construction operations, shall be furnished, set and properly referenced by the Contractor. The Contractor shall be solely and completely responsible for the accuracy of the line and grade of all features of the work. Any errors or apparent discrepancies found in previous surveys, the plans and specifications shall be called to the Project Manager's attention by the Contractor for correction or interpretation prior to the proceeding with the work.

G. Before construction is started on any structure which is referenced to an existing structure or topographical feature, the Contractor shall check the pertinent locations and grades of the existing structures or topographical features to determine whether the locations and grades shown on the plans are correct.

H. All construction staking shall be performed by qualified personnel under the direct supervision of a person with an engineering background who is experienced in the direction of such work and is acceptable to the Project Manager.

I. All stakes and markers used for control staking shall be of the same quality as used by the Department for this purpose. For slope limits, pavement edges, gutter lines, etc., where so called "working" stakes are commonly used, stakes of different quality may be acceptable.

J. The Department may check the Contractor's control of the work at any times as the work progresses. The Contractor will be informed of the results of these checks, but the Department by doing so will in no way relieve the Contractor of his responsibility for the accuracy of the layout work. The Contractor shall at his expense correct or replace any deficient or inaccurate layout and construction work. If, as a result of these deficiencies or inaccuracies, the Department is required to make further studies, redesign, or both, all expenses incurred by the Department due to such deficiencies or inaccuracies, will be deduced from any payment due the Contractor.

K. The Contractor shall furnish all necessary personnel, engineering equipment and supplies, materials, and transportation incidental to the accurate and satisfactory completion of this work. Unless otherwise provided, all requirements imposed by this section and performed by the Contractor shall be considered incidental to the various contract items and not separate or additional payment will be made thereof.

1.11 SPECIAL PROJECT REQUIREMENTS

A. Upon receipt of the Contract, the Contractor shall process and return the Contract to the DHHL office within five (5) calendar days.

B. The State intends to issue the Notice to Proceed for the Project to the Contractor within 30 calendar days after bid opening. The Contractor shall be able to commence work on this date.

1.12 UNFORSEEN CONDITIONS ALLOWANCE

A. Included in this project is an allowance for unforeseen conditions to be used by the engineer to pay for unknown conditions from either review of the contract documents or existing exposed conditions found at the site or anticipated from the type of work found.

B. All unforeseen conditions that the Contractor is anticipating being compensated for must be brought to the attention of the engineer and acknowledged as an unforeseen condition that will be paid for by the State before the Contactor proceeds with his work.

C. Work accomplished by the Contractor without prior approval by the Project Manager will be considered part of the work wand incidental to the work and no additional compensation will be allowed.

PART 2 – PRODUCTS (Not Used)

PART 3 – EXECUTION (Not Used)

PART 4 - MEASUREMENT AND PAYMENT

4.01 BASIS OF MEASUREMENT AND PAYMENT

A. Work under this section will not be measured not paid for separately, but shall be considered incidental to and included in the bid prices for the various items of work in this project.

B. Work under this section for unforeseen conditions shall be paid under an allowance item in the Proposal Schedule. The allowance is an estimate and the Additional charges by the Contractor for overhead, coordination, profit, included in the Contractor's lump sum bid price.

END OF SECTION

SECTION 01525 – SAFETY REQUIREMENTS

PART 1 – GENERAL

1.01 RELATED DOCUMENTS

Safety Requirements shall be made in accordance with Section 7.16 – "SATITRY, HEALTH AND SAFETY PROVISIONS" of DHHL'S General Conditions.

1.02 REFERENCES: The latest publications listed below form a part of this specification to the extent referenced. The publications are referred to in the text by the basic designation only.

A. ANSI A10.14 – Construction and Demolition Operations – Requirements for Safety Belts, Harnesses, Lanyards and Lifelines for Construction and Demolition Use.

1.03 SAFETY

A. The Contractor shall take the necessary precautions to protect his workers and other personnel from injuries. The rules and regulations promulgated by the Occupational Safety and Health Acts are applicable and made a part of these specifications.

B. During the progress of the work debris, empty crates, waste, material drippings, etc., shall be removed by the Contractor at the end of each work day, and the work area shall be left clean and orderly.

END OF SECTION

SECTION 01530 - BARRICADES

PART 1 – GENERAL

1.01 RELATED DOCUMENTS

Barricades shall be made in accordance with Section 7.16 – “SATITRY, HEALTH AND SAFETY PROVISIONS” of DHHL’S General Conditions.

1.02 GENERAL REQUIREMENTS:

A. Description: This work shall consist of furnishing, installing and maintaining barricades in accordance with the requirements of the contract.

Barricade application shall be provided for in the latest edition of the FHWA publication, Manual on Uniform Traffic Control Devices for Streets and Highways (MUTCD), and as amended.

PART 2 - PRODUCTS

2.01 MATERIALS:

A. Lumber: Lumber (treated) for rails, frames and braces shall be dry, sound, undamaged, well seasoned, and free from any defect which may impair their strength and durability.

B. Hardware: Nails shall be galvanized wire nails. As many and as large a size as is practicable shall be used.

C. Paints: Paints shall be exterior enamel paint of the best grade or first line as made by approved manufacturers.

D. Sheet Reflecting Material: Sheet reflecting material shall conform to the applicable requirements of Subsection 712.20(C) of the "Standard Specifications for Road and Bridge Construction".

E. Alternate Designs: Alternate barricade designs such as plastic molded barricades may be used subject to the Project Manager's approval. The Contractor shall submit shop drawings or catalog cuts for approval.

PART 3 - EXECUTION

3.01 CONSTRUCTION REQUIREMENTS:

A. General: Barricades shall be constructed in a first class, workmanlike manner in accordance with details shown on the plans and as specified

herein.

Barricades shall be in good condition and approved by the Project Manager for use within the project limits. Barricade application and installation shall be as shown on the plans and as directed by the Project Manager in accordance with the guidelines provided in the latest edition of the FHWA publication, Manual on Uniform Traffic Control Devices for Streets and Highways (MUTCD), and any amendments or revisions thereof as may be made from time to time.

Sand bags or other approved weights shall be provided where required or as directed by the Project Manager. Sand bags or other approved weights shall not be placed on any striped barricade rail.

Steady burn and/or flashing lamps shall be required on selected barricades used during hours of darkness. Locations shall be as shown on the plans and as directed by the Project Manager. Lamps shall be attached on the barricade ends closest to the traveled way and shall be visible to the motorist.

Barricades furnished and paid for as provided for as provided herein may be used for temporary detours, construction phasing, or other temporary traffic control work.

Barricades furnished and paid for use in temporary detours or construction phasing may be used for permanent location called for on the plans.

Upon completion of the construction work, barricades shall be left in place, relocated, or removed and disposed of as shown on the plans or as directed by the Project Manager. Barricades left in place, or relocated to new permanent locations shall become the property of the State. Barricades directed to be removed and disposed of shall become the property of the Contractor.

B. Painting: Wooden rails, frames and braces shall be given a prime coat and 2 finish coats of new white exterior enamel paint. Rail faces to be reflectorized may be left unpainted unless otherwise specified or directed.

C. Reflectorizing: Reflectorizing of barricade rails shall be done in a first class, workmanlike manner and the attachment of reflective sheeting shall be as shown on the plans, specified herein, or as directed and approved by the Project Manager.

Both vertical faces of each barricade rail shall be reflectorized as shown on the plans.

Wooden rails shall be reflectorized with one of the following:

1. Reflective sheeting specified in Subsection 712.20(C)(4) of the "Standard Specifications for Road and Bridge Construction" and backed with a 26 gage galvanized steel sheet, or

2. A hardened aluminum backed reflective sheeting as specified in Subsection 712.20(C)(5) of the "Standard Specifications for Road and Bridge Construction."

D. Color: Rails, frames and braces shall be white.

The front and back faces of barricade rails shall have 6-inch wide alternative colored and white striped sloping downward toward the traveled way at an angle of 45 degrees with the vertical. The colored stripes shall be either orange or red in accordance with the following requirements:

1. Orange and white stripes shall be used in the following conditions:

   a. Construction work.

   b. Detours.

   c. Maintenance work.

2. Red and white stripes shall be used in the following conditions:

   a. On roadways with no outlet (i.e. dead-ends, cul-de-sacs).

   b. Ramps or lanes closed for operational purposes.

   c. Permanent or semi-permanent closure or termination of a roadway.

E. Maintenance: Barricades shall be kept in good condition throughout their usage during construction until the end of the contract.

F. The Contractor shall repair, repaint, clean or replace the barricades as required and as directed by the Project Manager to maintain their effectiveness and appearance.

The Constructor shall immediately replace all lost, stolen or damaged barricades, lamps, sand bags and other approved weights.

Barricades used during construction phasing, temporary detours or other

temporary traffic control work shall be cleaned and repaired as necessary, prior to being relocated to a permanent location shown on the plans or as directed.

No extra payment will be made for any repair work, repainting, or cleaning of barricades. The Project Manager shall determine the suitable condition of each barricade and shall determine when each barricade shall be repaired, repainted or cleaned.

END OF SECTION

SECTION 01560 - ENVIRONMENTAL PROTECTION

PART 1 - GENERAL

1.01 GENERAL: This section covers prevention of environmental pollution and damage during and as the result of construction operations under this contract and for those measures set forth in other sections of the TECHNICAL SPECIFICATIONS. For the purpose of this specification, environmental pollution and damage is defined as the presence of chemical, physical, or biological elements or agents which adversely affect human health or welfare; unfavorably alter ecological balances of importance to utility of the environment for aesthetic, cultural and/or historical purposes. The control of environmental pollution and damage requires consideration of air, water, and land, and includes management of visual aesthetics, noise, solid waste, as well as other pollutants. It is the responsibility of the Contractor to investigate and comply with all applicable Federal, State and County laws and regulations concerning environmental protection and pollution control, and to secure all necessary permits.

1.02 SUBMITTALS: The Contractor shall submit an environmental protection plan in accordance with the provisions as herein specified. Environmental protection plan shall include but not be limited to the following:

A. Methods for protection of features to be preserved within authorized work areas. The Contractor shall prepare a listing of methods to protect resources needing protection; i.e., trees, shrubs, vines, grasses and ground cover, landscape features, air and water quality, fish and wildlife, soil, historical, archaeological, and cultural resources.

B. Procedures to be implemented to provide the required environmental protection and to comply with all applicable laws and regulations. The Contractor shall set out the procedures to be followed to correct pollution of the environment due to accident, natural causes, or failure to follow the procedures set out in accordance with the environmental protection plan.

C. Drawings showing locations of any proposed temporary excavations or embankments for haul roads, stream crossings, material storage areas, structures, sanitary facilities, and stockpiles or spoil material.

D. Environmental monitoring plans for the job site, including land, water, air and noise monitoring.

E. Methods of protecting surface and groundwater during construction activities.

F. Training for his personnel during the construction period.

1.03 IMPLEMENTATION: After receipt of Notice to Proceed, the Contractor shall submit in writing the above environmental protection plan for approval of the Engineer within 5 days after Notice to Proceed. Approval of the contractor's plan will not relieve the Contractor of his responsibility for adequate and continuing control of pollutants and their environmental protection measures.

1.04 SUBCONTRACTORS: Assurance of compliance with this section by subcontractors will be the responsibility of the Contractor.

1.05 NOTIFICATION: The Engineer will notify the Contractor in writing of any observed noncompliance with the aforementioned Federal, State or local laws or regulations, permits, and other elements of the Contractor's environmental protection plan. The Contractor shall, after receipt of such notice, inform the Engineer of proposed corrective action and take such action as may be approved. If the Contractor fails to comply promptly, the Engineer may issue an order stopping all or part of the work until satisfactory corrective action has been taken. No time extensions shall be granted or costs or damages allowed to the Contractor for any such suspension.

PART 2 - PRODUCTS (NOT USED)

PART 3 - EXECUTION

3.01 PROTECTION OF ENVIRONMENTAL RESOURCES: The environmental resources within the project boundaries and those affected outside the limits of permanent work under this contract shall be protected during the entire period of this contract. The Contractor shall confine his activities to areas defined by the drawings and specifications.

3.02 PROTECTION OF LAND RESOURCES: Prior to the beginning of any construction, the Contractor shall identify all land resources to be preserved within the Contractor's work area. Except in areas indicated on the drawings or specified to be cleared, the Contractor shall not remove, cut, deface, injure, or destroy land resources including trees, shrubs, vines, grasses, topsoil, and land forms without special permission from the Engineer. No ropes, cables, or guys shall be fastened to or attached to any trees for anchorage unless specifically authorized. Where such special emergency use is permitted, the Contractor shall provide effective protection for land and vegetation resources at all times as defined in the following subparagraphs.

A. Work Area Limits: Prior to any construction, the Contractor shall mark the areas that are not required to accomplish all work to be performed under this contract. Isolated areas within the general work area, which are to be saved and protected, shall also be marked or fenced. Monuments and markers shall be protected before construction operations commence.

Where construction operations are to be conducted during darkness, the markers shall be visible. The Contractor shall convey to his personnel the purpose of marking and/or protection of all necessary objects.

B. Protection of Landscape: Trees, shrubs, vines, grasses, land forms and other landscape features indicated and defined on the drawings to be preserved shall be clearly identified by marking, fencing, or wrapping with boards, or any other approved techniques.

C. Reduction of Exposure of Unprotected Erodible Soils: Earthwork brought to final grade shall be finished as indicated and specified. Side slopes and back slopes shall be protected as soon as practicable upon completion of rough grading. All earthwork shall be planned and conducted to minimize the duration of exposure of unprotected soils. Runoff from the construction site shall be controlled by construction of diversion ditches, benches, and berms to retard and divert runoff to protected drainage courses.

D. Disposal of Solid Waste by Removal From State Property: The Contractor shall transport all solid waste off State property and dispose of it in compliance with Federal, State and local requirements for solid waste disposal.

E. Disposal of Chemical Waste: Chemical waste shall be stored in corrosion resistant containers, removed from the work area and disposed of in accordance with Federal, State, and local regulations.

3.03 PROTECTION OF WATER RESOURCES: The Contractor shall keep construction activities under surveillance, management and control to avoid pollution of surface and groundwaters. Special management techniques as shall be implemented to control water pollution.

A. Protection of Waterways: Construction of drainage facilities as well as performance of other contract work which will contribute to the control of siltation shall be carried out in conjunction with the earthwork operations or as soon as thereafter as is practicable.

Prior to or during any suspension of construction operations for any appreciable length of time, the Contractor shall provide for any temporary erosion control measures deemed necessary. Such measures shall be continued until the permanent drainage facilities have been constructed and when called for, until the protective ground cover is sufficiently established to be an effective erosion deterrent. Should such measures fail and an appreciable quantity of material begins to erode into the natural waterway, the Contractor shall act immediately to bring the siltation under control.

B. Pollution: The Contractor shall exercise every reasonable precaution throughout the life if the project to prevent pollution of rivers, streams or impoundments. Pollutants such as chemicals, fuels, lubricants, bitumens, raw sewage and other harmful waste shall not be discharged into or alongside of the stream, or into natural or manmade channels leading thereto. The Contractor shall also comply with the applicable regulations of the State Department of Land and Natural Resources and other statutes relating to the prevention and abatement of pollution.

The Contractor shall conduct his operations near harbors, bays, swimming and water recreation areas, to avoid and minimize pollution. He shall comply with the applicable regulations of the United States Department of Interior, State Department of Health and other authority having jurisdiction.

Monitoring of water areas affected by construction activities shall be the responsibility of the Contractor. All water areas affected by construction activities shall be monitored by the Contractor.

3.04 PROTECTION OF FISH AND WILDLIFE RESOURCES: The Contractor shall keep construction activities under surveillance, management and control to minimize interference with, disturbance to and damage of fish and wildlife.

3.05 PROTECTION OF AIR RESOURCES: The Contractor shall keep construction activities under surveillance, management and control to minimize pollution of air resources. All activities, equipment, processed, and work operated or performed by the Contractor in accomplishing the specified construction shall be in strict accordance with the State of Hawaii Public Health Regulations, Chapter 43, "Air Pollution Control." Special management techniques as set out below shall be implemented to control air pollution by the construction activities, which are included in the contract.

A. Particulates: Dust particles, aerosols, and gaseous by-products from all construction activities and processing and preparation of materials shall be controlled at all times, including weekends, holidays and hours when work is not in progress. The Contractor shall maintain all excavations, stockpiles, haul roads, permanent and temporary access roads, plant sites, spoil areas, borrow areas, and all other work areas within or outside the project boundaries free from particulates which would cause the air pollution standards mentioned above to be exceeded or which would cause a hazard or a nuisance. Sprinkling or other methods approved by the Engineer will be permitted to control particulates in the work area. Sprinkling, to be efficient, must be repeated at such intervals as to keep the disturbed area damp at all times. The Contractor must have sufficient competent equipment available to accomplish this task. Particulate control shall be performed as the work proceeds and whenever a particulate nuisance or hazard occurs.

B. Hydrocarbons and carbon monoxide emissions from equipment shall be controlled to Federal and State allowable limits at all times.

C. Odors shall be controlled at all times for all construction activities, processing and preparation of materials.

D. Monitoring of air quality shall be the responsibility of the Contractor. All air areas affected by the construction activities shall be monitored by the Contractor.

3.06 PROTECTION FROM SOUND INTRUSIONS: The Contractor shall adhere to the requirements of the Department of Health and shall implement acceptable noise abatement methods to minimize the construction noise level.

Noise shall be kept within acceptable levels at all times in conformance with Title II, Administration Rules, Chapter 43, Community Noise Control, State Department of Health, Public Health Regulations. The Contractor shall obtain the pay for community noise permit from the State Department of Health when the construction equipment or other devices emit noise at levels exceeding the allowable limits. .

All internal combustion engine-powered equipment shall have mufflers to minimize noise and shall be properly maintained to reduce noise to acceptable levels.

3.07 POST CONSTRUCTION CLEANUP: The Contractor shall clean up areas used for construction.

3.08 RESTORATION OF LANDSCAPE DAMAGE: The Contractor shall restore all landscape features damaged or destroyed during construction operations outside the limits of the approved work areas. Such restoration shall be in accordance with the plan submitted for approval by the Engineer. This work will be accomplished at the Contractor's expense.

3.09 MAINTENANCE OF POLLUTION CONTROL FACILITIES: The Contractor shall maintain all constructed facilities and portable pollution control devices for the duration of the contract or for that length of time construction activities create the particular pollutant.

3.10 TRAINING OF CONTRACTOR PERSONNEL IN POLLUTION CONTROL: The Contractor shall train his personnel in all phases of environmental protection. The training shall include methods of detecting and avoiding pollution, familiarization with pollution standards, both statutory and contractual, and installation and care of facilities (vegetative covers and instruments required for monitoring purposes) to ensure adequate and continuous environmental pollution control.

PART 4 – MEASUREMENT AND PAYMENT

4.01 BASIS OF MEASUREMENT AND PAYMENT

Work under this section will not be measured nor paid for separately, but shall be considered incidental to and included in the bid prices for the various items of work in this project.

END OF SECTION

SECTION 01567 – POLLUTION CONTROL

PART 1 – GENERAL

1.01 RELATED DOCUMENTS

Pollution Control shall be made in accordance with Section 40 – "POLLUTION CONTROL" of the State's General Conditions, AG-008 103D.

1.02 GENERAL REQUIREMENTS:

A. Rubbish Disposal:

1. No burning of debris and/or waste materials shall be permitted on the project site.

2. No burying of debris and/or waste material except for materials which are specifically indicated elsewhere in these specifications as suitable for backfill shall be permitted on the project site.

3. All unusable debris and waste material shall be hauled away to an appropriate off-site dump area. During loading operations, debris and waste materials shall be watered down to allay dust.

4. No dry sweeping shall be permitted in cleaning rubbish and fines which can become airborne from floors or other paved areas. Vacuuming, wet mopping or wet or damp sweeping is permissible.

5. Enclosed chutes and/or containers shall be used for conveying debris from above to ground floor level.

6. Clean-up shall include the collection of all waste paper and wrapping materials, cans, bottles, construction waste materials and other objectionable materials, and removal as required. Frequency of clean-up shall coincide with rubbish producing events.

B. Dust:

1. The Contractor shall prevent dust from becoming airborne at all times including non-working hours, weekends and holidays in conformance with the State Department of Health, Administrative Rules, Title 11, Chapter 60 – Air Pollution Control.

2. The method of dust control and costs shall be the responsibility of the Contractor. Methods of dust control shall include the use of

water, chemicals or asphalt over surfaces which may create airborne dust.

C. Noise:

1. Noise shall be kept within acceptable levels at all times in conformance with the State Department of Health, Administrative Rules, title 11, Chapter 46 – Community Noise Control for Oahu. The Contractor shall obtain and pay for the Community Noise Permit from the State Department of Health when the construction equipment or other devices emit noise at levels exceeding the allowable limits.

2. All internal combustion engine-powered equipment shall have mufflers to minimize noise and shall be properly maintained to reduce noise to acceptable levels.

3. Pile driving operations shall be confined to the period between 9:00 a.m. and 5:30 p.m., Monday through Friday. Pile driving will not be permitted on weekends and legal State and Federal holidays.

4. Starting-up of construction equipment meeting allowable noise limits shall not be done prior to 6:45 a.m. without prior approval of the Project Manager. Equipment exceeding allowable noise levels shall not be started-up prior to 7:00 a.m.

D. Erosion:

1. During interim grading operations, the grade shall be maintained so as to preclude any damage to adjoining property from water and eroding soil.

2. Temporary berms, cut-off ditches and other provisions which may be required because of the Contractor's method of operations shall be installed at no cost to the State.

3. Drainage outlets and silting basing shall be constructed and maintained as shown on the plans to minimize erosion and pollution of waterways during construction.

E. Others:

1. Wherever trucks and/or vehicles leave the site and enter surrounding paved streets, the Contractor shall prevent any material from being carried onto the pavement. Waste water shall not be discharged into existing streams, waterways, or drainage

systems such as gutters and catch basins unless treated to comply with the State Department of Health water pollution regulations.

2. Trucks hauling debris shall be covered as required by PUC regulation. Trucks hauling fine materials shall be covered.

3. No dumping of waste concrete will be permitted at the job-site.

4. Except for rinsing of the hopper and delivery chute, and for wheel washing where required, concrete trucks shall not be cleaned on the job-site.

5. Except in an emergency, such as a mechanical breakdown, all vehicle fueling and maintenance shall be done in a designated area. A temporary berm shall b constructed around the area when runoff can cause a problem.

6. When spray painting is allowed such spray painting shall be done by the "airless spray" process. Other types of spray painting will not be allowed.

F. Suspension of Work:

1. Violations of any of the above requirements of any other pollution control requirements which may be specified in the Technical Specifications herein shall be cause for suspension of the work creating such violations. No additional compensation shall be due the Contractor for remedial measures to correct the offense. Also, no extension of time will be granted for delays caused by such suspensions.

2. If no corrective action is taken by the Contractor within 72 hours after a suspension is ordered by the Project Manager, the State reserves the right to take whatever action is necessary to correct the situation and to deduct all costs incurred by the State in taking such action from monies due the Contractor.

3. The Project Manager may also suspend any operations which he feels are creating pollution problems although they may not be in violation of the above-mentioned requirements. In this instance, the work shall be done by force account as described in Subsection 4.2b – "Additional Work" of the GENERAL CONDITIONS and paid for in accordance with Subsection 8.4b – "Force-Account Work" therein. The count of elapsed working days to be charged against the contract in this situation shall be computed in accordance with Subsection 7.18 – "Contract Time" of the GENERAL CONDITIONS.

PART 2 – PRODUCTS (NOT USED)

PART 3 – EXECUTION (NOT USED)

END OF SECTION

SECTION 01580 – TEMPORARY FACILITIES AND UTILITIES

PART 1 – GENERAL

1.01 RELATED DOCUMENTS

The General Provisions of the Contract, including General and Special Provisions and General Requirements of the Specifications, apply to the work specified in this section.

1.02 DESCRIPTION

This item shall consist of arranging and maintaining all utilities including, but not limited to, water, electricity, sewage disposal and telephone communications in the work area which the Contractor and Engineer deems necessary to meet the requirements of the work under the contract.

PART 2 – PRODUCTS (Not Applicable)

PART 3 – EXECUTION

3.01 TEMPORARY UTILITIES DURING CONSTRUCTION

A. Water and Sanitation: The Contractor shall provide temporary drinking water and sanitary facilities for the field personnel. The facilities shall be in accordance with the applicable health regulations and shall be maintained clean and operable until the conclusion of the construction work.

B. Telephone: Cellular telephones are acceptable. All costs associated with obtaining and maintaining telephone service shall be borne by the Contractor.

C. Electricity: Contractor shall obtain or provide temporary electric power and shall pay for all connections and energy charges incurred during construction.

D. Metering: Water and electrical services shall be metered and payment for meters and services shall be borne by the Contractor. Temporary connections for water shall include installation of a meter and backflow preventer at the point of connection according to State standards at the Contractor's cost. The Contactor shall submit requests for temporary connection in writing to the Engineer fourteen (14) calendar days prior to the connection and shall include a description of work and a sketch of the proposed installation.

PART 4 – MEASUREMENT AND PAYMENT

4.01 BASIS OF MEASUREMENT AND PAYMENT

Work under this section will not be measured nor paid for separately, but shall be considered incidental to and included in the prices bid for the various items of work in this project.

END OF SECTION

SECTION 01750 - GUARANTEE

PART 1 – GENERAL

1.01 RELATED DOCUMENTS

Guarantee shall be made in accordance with Section 7.35 – "GUARANTEE OF WORK" of the DHHL's General Conditions.

1.01 GUARANTEES

The Contractor guarantees all materials and equipment furnished to be in operable condition upon final acceptance of the work and that all such materials and equipment conform to the requirements of this contract and be fit for the use intended.

He further guarantees all such materials and equipment against defects and poor workmanship and, to the extent that he is responsible for design, the Contractor guarantees the design to meet the criteria and operating requirements specified against failure to perform in accordance with such criteria and operating requirements.

The period of this guarantee shall commence upon acceptance of the work by the DHHL, and shall extend through the project performance evaluation period not to exceed 1 year for all materials and equipment, provided that this period shall be extended from the time of correction of any defect or failures, corrected under the terms of this guarantee, for a like period for the corrected work.

The Contractor shall correct all defects or failures discovered within the guarantee period. The DHHL will give the Contractor prompt written notice of such defects or failures following their discovery. The Contractor shall commence corrective work within five (5) days following notification and shall diligently prosecute such work to completion. The Contractor shall bear all costs of corrective work, which shall include necessary disassembly, transportation, reassembly and retesting, as well as repair or replacement of the defective material or equipment, and any necessary disassembly and reassembly of adjacent work.

Any period that a particular equipment is not operable due to its failure shall not be considered as a part of the guarantee period. The guarantee period shall be extended for a like period. If due to failure of other equipment the equipment is unable to perform its intended function, the guarantee period shall be extended for a like period. Time that equipment is operating shall be counted as applying to the warranty. Such time shall be determined by use of plant operator's log or other suitable documentation.

If the Contractor falls to perform corrective work in the manner and within the time stated, the Department of Hawaiian Home Lands (DHHL) may proceed to have such work performed at the Contractor's expense and his sureties will be liable therefor. The DHHL shall be entitled to reasonable attorney's fees and court costs necessarily incurred by the Contractor's refusal to honor and pay such costs of corrective work. The Contractor's performance bond shall continue in full force and effect during the period of this guarantee.

The rights and remedies of the DHHL under this provision do not preclude the exercise of any other rights or remedies provided by this contract or by law with respect to unsatisfactory work performed by the Contractor.

This guarantee shall be deemed supplemental to guarantee provisions provided in other sections of the specifications for the individual units and systems of units so specified.

Guarantee periods shall start at the time of acceptance in writing by the State.
All guarantees and warranties shall be made out to the “State of Hawaii.”
Supplier and subcontractor guarantees shall be co-signed by the Contractor.
The Contractor is solely responsible for coincidence or non-coincidence of factory warranties or equipment guarantees, and the Contractor’s own warranties and guarantees as required by the contract. The Contractor is solely responsible for scheduling and coordinating the installation of equipment and materials so as to take maximum advantage of factory warranties.

END OF SECTION

SECTION 01019 - GENERAL SPECIFICATIONS

PART 1 - GENERAL

1.01 GENERAL REQUIREMENTS:
Work shall consist of furnishing all labor, tools, materials and equipment necessary and required to construct in place complete all work as indicated on the drawings and as specified herein.

1.02 GENERAL

A. Examination of Premises: The Contractor shall contact the Project Manager and obtain permission before visiting the site.

B. All lines and grades shall be established by a licensed surveyor, or licensed Civil Project Manager, registered in the State of Hawaii. The Contractor shall submit evidence of current and valid registration.

C. Notices: The Contractor shall notify the Project Manager and give at least three (3) working days notice before starting any work.

D. Disruption of Utility Services: All work related to the temporary disconnection of electrical system shall be pre-arranged with the Project Manager so that any disruption of such services will be kept to a minimum. In the event temporary power hook-up is required, the Contractor shall provide the necessary services.

E. Contractor's Operations:

1. The Contractor must employ, insofar as possible, such methods and means of carrying out the work so as not to cause any interruption or interference to the facility's operations. Where the Contractor's operations would result in interruptions which would hamper the operations of the facilities, the Contractor shall rearrange the schedule of work accordingly.

2. The Contractor shall maintain safe passageway to and from the facility for the user agency personnel and the public at all times.

F. Lead Paint:

1. When the project includes paint to be disturbed that was applied prior to 1980, it shall be assumed to contain lead. The Contractor shall inform its employees, subcontractors, and all other persons engaged in the project that lead containing paints are present in the existing buildings at the job site and to follow the requirements of the

Department of Labor and Industrial Relations, Division of Occupational Safety and Health, Title 12, Subtitle 8, Chapter 148, Lead Exposure in Construction, Hawaii Administrative Rules (Chapter 12-148, HAR).

G. Parking Policy for Contractor:

1. The Contractor and its employees will not be allowed to park in zones assigned to facility personnel.

2. Areas to be used by the Contractor shall be as designated by the Project Manager. Any lawn damaged by the Contractor shall be restored as instructed by the Project Manager at no cost to the State.

H. Toilet Accommodations:

The Contractor must supply their own toilet facilities and be responsible to keep it clean and in a sanitary condition at all times.

I. Protection of Property:

The Contractor shall continually maintain adequate protection of all its work from damage and shall protect all property, including but not limited to buildings, equipment, furniture, grounds, and vegetation, material, utility systems located at and adjoining the job site. The Contractor shall repair, replace or pay the expense of repair of damages resulting from its operations.

J. Use of Power Driven Equipment:

The Contractor is cautioned to take all necessary safety precautions to protect the facility personnel, and the public whenever power driven equipment is used.

K. Safety:

The Contractor shall carefully read and strictly comply with the requirements of the Hawaii Occupational Safety and Health Law, Chapter 396, Hawaii Revised Statutes, as amended, is applicable and made a part of the Contract.

L. Clean Up Premises:

The Contractor shall clean up and remove from premises all debris accumulated from operations as necessary or as directed. See also Section 7.25 of the General Conditions.

M. Responsibility:

1. The State will hold the Contractor liable for all the acts of Subcontractors and shall deal only with the prime Contractor in matters pertaining to other trades employed on the job. The Contractor shall be responsible for coordinating the work of all trades on the job.

2. Should the Contractor discover any discrepancy in the plans or specifications, the Contractor shall immediately notify the Project Manager before proceeding any further with the work, otherwise, the

   Contractor will be held responsible for any cost involved in correction of work placed due to such discrepancy.

N. Cooperation with Other Contractors:

The State reserves the right at any time to contract for or otherwise perform other or additional work within the contract zone limits of this Contract. The Contractor of this project shall, to the extent ordered by the State, conduct its work so as not to interfere with or hinder the progress or completion of the work performed by other contractors.

O. Division of the Work:

The Divisions and Sections into which these Specifications are divided shall not be considered an accurate or complete segregation of work by trades. This also applies to all work specified within each Section.

P. Drawings and Specifications:

1. The Contractor shall not make alterations in the drawings and specifications. In the event the Contractor discovers any errors or discrepancies, the Contractor shall immediately notify the Project Manager in accordance with the General Conditions.

2. Where devices, or items, or parts thereof are referred to in the singular, it is intended that such reference shall apply to as many such devices, items or parts as are required to properly complete the work.

3. Specifications and drawings are prepared in abbreviated form and include incomplete sentences. Omission of words or phrases such as "the Contractor shall", "as shown on the drawings", "a", "an", and "the" are intentional. Omitted words and phrases shall be provided by

inference to form complete sentences.

Q. Required Submittals:

1. Required submittals as specified in the Technical Sections of these specifications include one or more of the following: Shop drawings; color samples; material samples; technical data; schedules of materials; schedules of operations; guarantees; operating and maintenance manuals; and as-built drawings.

2. The Contractor shall make a comprehensive list of the required submittals, by Specification Section, and submit this list to the Project Manager within 15 days after notice to proceed.

3. As-Built Drawings: When as-built drawings are required for submittal, the following shall apply:

a. As-built drawings, the intent of which is to record the actual in-place construction so that any future renovations or tie-ins can be anticipated accurately, shall be required.

b. All deviations from alignments, elevations and dimensions which are stipulated on the plans shall be recorded in red on the as-built drawings.

c. The following procedure shall be followed:

(1) Immediately after these changes are constructed in place, the Contractor shall record them on the field office plans.

(2) Within two weeks after final inspection of the project, the Contractor shall transfer the changes marked on the field office plans onto a clean copy of plans using a red pencil. Any deletions shall be so noted and redrawn as necessary. The Contractor shall stamp or mark the tracings "AS-BUILT", and also sign and date each drawing so marked.

(3) The Contractor shall submit the as-built drawings to the Design Consultant for review, approval and changes. After the Design Consultant approves the as-built drawings, the Design Consultant shall submit as-built drawing on velum, electronic copy of Specification in Word and drawing in AutoCad on CD ROM.

(4) Any as-built drawing which the Project Manager determines does not accurately record the deviation shall be corrected by

the Consultant at no charges to the State for these services.

END OF SECTION

SECTION 01300 – SUBMITTALS

PART 1 – GENERAL

1.01 RELATED DOCUMENTS

Shop drawings and submittals shall be made in accordance with DHHL's General Conditions, Section 5.5.1 – "SHOP DRAWINGS" and Section 6.3 – "SUBSTITUTION OF MATERIALS AND EQUIPMENT"

1.02 OTHER SUBMITTALS REQUIRED BEFORE CONSTRCTION

The Contractor shall submit the following items prior to or at the pre-construction meeting or unless otherwise noted:

1.03 SHOP DRAWINGS, SAMPLES, CATALOG CUTS, AND CERTIFICATES

A. Submittal Schedule: Prior to the submission of any shop drawings or submittals, the Contractor shall submit to the Construction Manager and Design Consultant for review, a submittal schedule. The schedule shall identify the subject matter of each submittal, the corresponding specification section number and the proposed date of submission. During the progress of work, the Contractor shall revise and resubmit the submittal schedule as directed by the Project Manager.

B. The Contractor shall submit for review to the Construction Manager, or to a representative designated by the Project Manager, electronically or submit four (4) copies, if directed by the Project Manager of all shop drawings, samples, catalog cuts and certificates. Two (2) copies will be returned to the Contractor with information of review action. The Contractor shall submit additional quantities for their subcontractor's or supplier's use. Each shop drawing, certificate of compliance, sample, and equipment list shall be checked and certified correct by the Contractor, and shall be identified with the applicable information specified hereinafter under "Submittal Identification."

Items are to be reviewed prior to commencing fabrication or delivery of material to the job site.

C. Each copy of the drawings, certificates, catalog cuts, and lists reviewed by the Design Consultant will be stamped "REVIEW ACTION" with the appropriate action noted therein. The review of the Design Consultant shall not be construed as a complete check but will indicate only that the general method of construction and detailing is satisfactory. Acceptance of such drawings will not relieve the Contractor the responsibility of conforming to the contract drawings and specifications or for any error or omission which may exist as the Contractor shall be responsible for the dimensions and design of adequate connections, details, and satisfactory construction

of all work. Each shop drawing submitted for review shall have, in the lower right-hand corner just above title, a white space 4" x 4" in which the Design Consultant can place the stamp and indicate action taken. The Contractor shall also inform their subcontractors to provide this space in their preparation of shop drawings.

1.07 TEST REPORTS

Six copies of test reports for any material used in this Contract shall be submitted when specified or required by the Project Manager.

1.08 SUBMITTAL IDENTIFICATION

A. To avoid rejection and to clarify each submittal, the General Contractor shall have a rubber stamp made up in the following format:

B. CONTRACTOR NAME: _____

PROJECT: _____

IFB NO: _____

THIS SUBMITTAL HAS BEEN CHECKED BY THIS GENERAL CONTRACTOR. IT IS CERTIFIED CORRECT, COMPLETE, AND IN COMPLIANCE WITH CONTRACT DRAWINGS AND SPECIFICATIONS. ALL AFFECTED CONTRACTORS AND SUPPLIERS ARE AWARE OF, AND WILL INTEGRATE THIS SUBMITTAL INTO THEIR OWN WORK.

DATE RECEIVED_____

SPECIFICATION SECTION _____

SPECIFICATION PARAGRAPH_____

DRAWING NUMBER_____

SUBCONTRACTOR NAME_____

SUPPLIER NAME_____

MANUFACTURER NAME_____

CERTIFIED BY:_____

C. This stamp “filled in” should appear on each reproducible shop drawing, on the cover sheet of copies of test and mill reports, certificates of compliance, catalog cuts, brochures, etc. The stamp should be placed on a heavy stock paper merchandise (approximately 3” x 6”) and one tag tied to each sample submitted for approval. The tag on the samples should state what the sample is, so that if the tag is accidentally separated from the sample they can be matched up again.

The back of this tag will be used by the Project Manager for receipt, approval, and log stamp for any comments that relates to the sample.

D. Submission Number: Each submission is to be sequentially numbered in the space provided in the Contractor’s stamp. Correspondence and transmittal will refer to this number.

E. The Contractor shall ensure that all submittals, including shop drawings, are compete and in conformance to the requirements of the Contract specifications prior to submissions to the State for review and acceptance. Incomplete submittals will not be processed by the State and returned to the Contractor for correction. Any cost impacts and delays in the Project schedule as a result of incomplete submittals shall be the responsibility of the Contactor.

1.10 GUARANTEES

Guarantee periods shall start at the time of acceptance in writing by the State.

All guarantees and warranties shall be made out to the “State of Hawaii.” Supplier and subcontractor guarantees shall be co-signed by the Contractor.

The Contractor is solely responsible for coincidence or non-coincidence of factory warranties or equipment guarantees, and the Contractor’s own warranties and guarantees as required by the contract. The Contractor is solely responsible for scheduling and coordinating the installation of equipment and materials so as to take maximum advantage of factory warranties.

PART 2 – PRODUCTS (Not Used)

PART 3 – EXECUTION (Not Used)

PART 4 – MEASUREMENT AND PAYMENT

4.01 BASIS OF MEASUREMENT AND PAYMENT

Work under this section will not be measured nor paid for separately, but shall be considered incidental to and included in the bid prices for the various items of work in this project.

END OF SECTION

SECTION 01310 – CONSTRUCTION SCHEDULES & SCHEDULES OF VALUES

PART 1 – GENERAL

1.01 RELATED DOCUMENTS

Construction Schedules and Schedules of Values shall be made in accordance with Section 7.22 – "CONSTRUCTION SCHEDULES" of the DHHL General Conditions.

1.02 DETAILED CONSTRUCTION SCHEDULE – CRITICAL PATH METHOD (CPM)

A. Contractor shall prepare and submit a detail Detailed Construction Schedule to the Project Manager for review, not later than thirty (30) calendar days after the Notice of Award or upon earlier written instructions from the DHHL. The detailed construction schedule shall be based on a detailed critical path analysis of construction activities and sequence of operations needed for the orderly performance and completion of any separable parts of any work and all work in accordance with the Contract. The schedule shall be Critical Path Method (CPM) type in the form of an arrow diagram and activity listing or comprehensive bar graph. The network diagram shall show in detail and in orderly sequence all activities on a time scale, their description, durations and dependencies, necessary and required to complete all work and any separable parts thereof. If requested by the DHHL, the Contractor shall participate in a preliminary meeting to discuss the proposed schedule and requirements prior to submission of the schedule.

The schedule shall show in detail the following information for each activity.

1. Identification by code numbers and description;
2. Duration time scaled by weeks;
3. Craft and Equipment;
4. Earliest start and early finish dates;
5. Latest start and late finish dates;
6. Total and free float time; and
7. Highlighted Critical Path

"Float" means the length of time between the early start date and the late start date, or the early finish date and late finish date for any of the activities noted on the **critical path method** (**CPM**) Schedule.

The "Critical Path" is made up of activities which control the total length of the project. It is by definition, the longest path through the schedule. For this project, a critical activity shall be any activity with less than five (5) days of total float.

Non-work days (e.g. Holidays, exclusionary non-work days).

B. The detail construction schedule shall be complete in all respects, covering in addition to activities at the site of work, off-site activities such as design, fabrication, and procurement of equipment; the scheduled delivery dates of such equipment; submittal and approval of shop drawings and samples; ordering and delivery of materials; inspections; and testing. The schedule shall also include a manpower forecast by crafts. The detailed construction schedule shall be supplemented by a three (3) week schedule prepared by the Contractor and submitted to the Construction Manager & Project Manager on a weekly basis.

C. Upon completion of the DHHL's review, the Contractor shall amend the schedule as necessary to reflect comments made by the DHHL. If necessary, the Contractor shall participate in a meeting with the DHHL to discuss the proposed schedule and changes required. The Contractor shall submit the revised schedule and cash flow for approval to the DHHL within seven (7) calendar days after receipt of the DHHL's comments

The schedule shall be kept up to date, taking into account the actual progress of work and shall be updated if necessary, every thirty (30) calendar days. The updated schedule shall, as determined by the DHHL Project Manager, be sufficient to meet the requirements for the completion of the separable parts of work and the entire projects as set forth in the contract. Upon commencing work, the Contractor shall submit at the start of each week to the DHHL Project Manager for review, a detailed two (2) week construction schedule.

D. If at any time during the progress of the Work, the Contractor's actual progress appears to the Project Manager to be inadequate to meet the requirements of the contract, the Project Manager will notify the Contractor of such imminent or actual noncompliance with the contract. The Contractor shall thereupon take such steps as may be necessary to improve his profess and the Project Manager may require an increase in the labor force, the number of shifts, and/or overtime operations, days or work and/or the amount of construction plants all without additional cost to the State. Neither such notice by the Project Manager nor the Project Manager's failure to issue such notice shall relieve the Contractor from his obligation to achieve the quality of work and rate of profess required by the Contract. Failure of the Contractor to comply with instructions of the Project Manager under these provisions may be grounds for determination by the State that the Contractor is not prosecuting work with such diligence as will assure completion within the time specified. Upon such determination, the State may employ labor and equipment and charge the Contractor for the cost thereof, including depreciation for plant and equipment or may terminate the Contractor's right to proceed with the

performance of the contract, or any separable part thereof, in accordance with the applicable provisions of the contract.

E. The Contractor shall submit the schedule to the Project Manager in Microsoft Project Format (.mpp) and Adobe PDF Format (PDF). The Contractor shall submit a narrative explaining the reasoning behind the construction of the schedule including but not limited to the reasons for durations, sequence of work, and a description of all critical path items. The narrative for each updated schedule shall outline all changes to the schedule and include the justification for each change.

F. Use the approved schedule for planning, organizing and directing the work, for reporting progress, and for requesting payment for the work completed. Do not make changes to the approved schedule without written approval of the DHHL.

G. Should changes to the schedule be desired, submit a request in writing to the DHHL and indicate the reason for the proposed change. Should the DHHL consider the change to be major, the DHHL may require the Contractor to revise and resubmit the schedule for approval at no additional cost to the DHHL. The Contractor shall mitigate the impact of all changes by re-sequencing activities, duration of time, or resources utilizing all available float.

1. A change shall be considered major if, in the opinion of the DHHL, the change may affect the substantial completion date or other contractual and milestone dates.

2. Minor changes are those that only affect activities with adequate float time.

H. Once the schedule has been approved by the DHHL, the Contractor shall furnish to the DHHL one (1) electric copy of the schedule within seven (7) calendar days.

I. Throughout the duration of the project, the DHHL reserves the right to request more detailed breakdowns of activities, logic, and schedule submittals from the Contractor at no additional cost to the DHHL.

J. Updated schedules shall be prepared and submitted to the DHHL at monthly intervals or as directed by the DHHL. The schedule shall reflect all changes occurring since the last update including the following:

1. Activities started and completed during the previous period.

2. The estimated duration to complete each activity which was started but not completed.

3. Percentage of cost payable for each activity.

4. Notifications and pending proposed changes.

5. Narrative report describing current and anticipated problem areas and/or delaying factors with their impact together with an explanation of corrective actions taken or proposed.

K. Failure on the part of the Contractor to submit updated schedules may be grounds for the DHHL to withhold progress payments for items noted on the schedule.

L. Contractor shall prosecute the work according to the CPM Schedule. The DHHL shall rely on the approved Contractor's CPM Schedule and regular updates for planning and coordination. The DHHL's review of the Contractor's CPM Construction Schedule does not relieve the Contractor of its obligation to complete the work within the allotted contract time. Nor does the review grant, reject or in any other way act on the Contractor's requests for adjustment(s) to complete remaining contract work, or claims of additional compensation. Such requests shall be processed in accordance with other relevant provisions of the contract.

M. If the DHHL issues a Field Order or Change Order that affects the sequence or duration of work activities noted on the construction progress schedule, the Contractor shall promptly update the schedule. This shall be accomplished by adding, deleting or revising the work activities noted or changing the logic in the schedule to show the Contractor's plan for incorporating the change into the flow or work. All Change Orders and Time Extension requests that affect the construction schedule shall be evaluated based on their impact on the approved Construction Schedule.

N. If the current work is behind schedule or projected to be behind schedule, such a negative float on a critical activity and/or inability to meet the Contract Completion Date, the DHHL may require the Contractor, at the Contractor's cost, to take remedial measures to get the project back on schedule. This may require increasing the work force, working, overtime and weekends, air freighting materials, or other similar actions.

O. If at any time the DHHL determines that any critical activity has fallen behind the CPM schedule by fifteen (15) calendar days or more, Contractor shall submit a remedial plan to recapture the lost schedule time. Include a revised schedule. Furnish the remedial plan no later than seven (7) calendar days from DHHL's notification.

1.03 SCHEDULE OF VALUES

A. The Contractor shall submit the Schedule of Values to the Project Manager for review, no later than thirty (30) calendar days after award of the Contract.

B. Format and Content: Use the Project Specifications table of contents as a guide to establish the format for the Schedule of Values. Provide at least one line item for each Specification Section. Provide a breakdown of the contract sum in sufficient detail to facilitate continued evaluation of Applications for Payment and progress reports. Break principle work or subcontract amounts down into several smaller identifiable items of work.

C. Identification: Include the following Project identification on the schedule of values:

1. Project name and location
2. Project number
3. Contractor's name and address
4. Contract No.
5. Date of submittal

D. Arrange the schedule of Values in tabular form with separate columns to indicate the following items listed:

1. Related Specification Section or Division
2. Description of work
3. Dollar value and percent complete

E. Correlate line items in the Schedule of Values with other required administrative schedules and forms including;

1. Construction Schedule
2. Application for Payment forms including continuation sheets
3. List of Subcontractors
4. List of principle suppliers and fabricators
5. Schedule of submittals

F. Round amount to nearest whole dollar; the total shall equal the contract sum.

G. Provide a separate line item in the Schedule of Values for each part of the work where Applications for Payment may include materials or equipment, purchased, fabricated or stored, but not yet installed.

H. Schedule Updating: Update and resubmit the Schedule of Values prior to the next Applications for Payment or when Charge Orders or Construction Change Directives result in a change in the Contract Sum.

END OF SECTION

SECTION 01400 – QUALITY CONTROL

PART 1 – GENERAL

1.01 RELATED DOCUMENTS

Construction Schedules and Schedules of Values shall be made in accordance with Section 7.35 – "GUARANTEE OF WORK" of the General Conditions.

1.02 QUALITY ASSURANCE

The General Contractor shall have complete responsibility for the following requirements.

A. Monitor quality control over products, services, site conditions and workmanship, to produce Work of specified quality.

B. Comply fully with manufacturers' approved instructions and recommendations, including each step in sequence. Should the manufacturers' instructions conflict with the Contract Documents, request clarification from the Project Manager before proceeding.

C. Comply with specified standards as a minimum quality for the Work except when more stringent tolerances, codes, or specified requirements indicate higher standards or more precise workmanship. Should specified reference standards conflict with the Contract Documents, request clarification from the Project Manager before proceeding.

D. Use only skilled mechanics, thoroughly trained and experienced in the necessary crafts to product workmanship of specified quality.

E. Secure materials in-place with positive anchorage devices designed and sized to withstand stresses, vibration, physical distortion and disfigurement.

1.03 REFERENCES

A. Confirm to the specified standards by date of issue as follows:

1. Code listing: For standards which are part of the Building Code in effect for this project, comply with the edition date published in the Building Code.

2. Non-code listings: For standards which are not a part of the Building Code in effect for this Project, use the edition in effect at the date of Owner-Contractor Agreement, except where otherwise specified in product sections.

B. Obtain copies of standards when required by the Contract Documents and when necessary for proper execution of the work. Maintain copies at the job site during progress of the work until Substantial Completion.

C. The contractual relationship of the parties to the Contract shall not be altered from the Contract Documents by mention or interference otherwise in reference documents.

1.04 DOCUMENT REVIEW

A. When required by individual specification sections require installer and agent of manufacturer of product systems to:

1. Review the contract documents.
2. Verify that systems are appropriate for the intended use.
3. Submit a statement of concurrence signed by the installer and the manufacturer.

B. Submit three (3) copies of the statement of concurrence to the Project Manager for review and acceptance.

C. Do not proceed with installation until the Project Manager has reviewed and accepted statement of concurrence.

PART 2 – PRODUCTS (Not used)

PART 3 – EXECUTION (Not used)

PART 4 – MEASUREMENT (Not used)

END OF SECTION

SECTION 01440 - ARCHAEOLOGICAL FINDINGS

PART 1 - GENERAL

1.01 PRESERVATION AND RECOVERY OF HISTORICAL, ARCHAEOLOGICAL. AND CULTURAL RESOURCES: Existing historical, archaeological, and cultural resources within the Contractor's work area will be so designated by the Engineer if any have been identified. The Contractor shall take precautions to preserve all such resources as they existed at the time they were pointed out to him. The Contractor shall provide and install all protection for these resources so designated and shall be responsible for their preservation during this contract. If during excavation or other construction activities in areas with existing or known resources, as well as in any other work area, any previously unidentified or unanticipated resources are discovered or found, all activities that may damage or alter such resources shall be temporarily suspended. Such temporary suspension of work shall not be attributable to the Contractor. These resources of cultural remains (prehistoric or historic surface or subsurface) include but are not limited to: any human skeletal remains or burials; artifacts; shell, midden, bone, charcoal, or other deposits; rocks or coral alignments, parings, wall, or other constructed features; and any indication or agricultural or other uses. Upon such discovery or find, the Contractor shall immediately notify the Engineer. When so notified, the Engineer will notify the State Historic Preservation Officer (SHPO) for further direction.

As directed by the Engineer, the Contractor may be allowed to continue any operation which would not further disturb the site(s); however, all work within the protected area shall be suspended until the Engineer is notified by the SHPO that all investigations or salvage operations have been completed.

END OF SECTION

SECTION 01505 – MOBILIZATION AND DEMOBILIZATION

PART 1 – GENERAL

1.01 GENERAL REQUIREMENTS

This section covers the requirements for mobilization and demobilization are hereby incorporated into and made a part of these specifications by reference unless otherwise modified hereinafter.

1.02 MOBILIZATION

The Contractor shall mobilize and transport his construction plant and equipment including materials and supplies for operation to the site of work, construct temporary buildings and facilities as necessary, and assemble the equipment at the site as soon as possible after receipt of Notice to Proceed, subject to the provisions of the General Provisions.

1.03 DEMOBILIZATION

The Contractor shall demobilize and transport his construction plant and equipment including materials, supplies and temporary buildings off the site as soon as possible after construction is completed. Demobilization shall include all cleanup required under this contract and as directed by the Engineer. Demobilization and final cleanup shall be completed prior to final acceptance.

1.04 PERFORMANCE BOND

The Contractor shall file and pay for the performance and payment bonds according to the Instruction for Bid Submittal, except that the value of the bonds shall equal one hundred percent (100%) of the amount of the contract basic bid amount plus one hundred percent (100%) of the amount of the extra work.

Payment for the Contractor's bond premium will be made in accordance to the terms stated in Part 4 below.

PART 2 – PRODUCTS (Not Applicable)

PART 3 – EXECUTION (Not Applicable)

PART 4 – MEASUREMENT AND PAYMENT

4.01 METHOD OF MEASUREMENT

A. Mobilization shall not be measured for payment. The maximum bid allowed for "Mobilization" is an amount not to exceed size (6) percent of the sum of all items (excluding this item and all Allowances). If the proposal submitted by the bidder indicates an amount in excess of the allowable maximum, the indicated amount or amounts shall be reduced to the allowable maximum; the "Sum of All Items," in the proposal schedule shall be adjusted to reflect

any such reduction. For the purpose of comparing bids and determining the contract price to be inserted in the contract awarded to the bidder, if any is so awarded, the "Sum of All Items" adjusted in accordance with the foregoing shall be used and the bidder's proposal shall be deemed to have been submitted for the amounts as reduced and adjusted in accordance herewith.

B. Demobilization will not be measured for payment. A separate line item called "Demobilization" will be added to the Contractor's Schedule of Values after the contract has been awarded. The total amount for this item shall be 2.5% of the Contractor's total bid amount and will be deducted from other line items in the schedule of values as negotiated between the Contractor and the State. **THE CONTRACTOR SHALL NOT MODIFY THE PROPOSAL SCHEDULE BY ADDING A "DEMOBILIZATION" BID ITEM TO THE PROPOSAL SCHEULE.**

4.02 BASIS OF PAYMENT

A. Mobilization will be paid for at the contract lump sum price under Mobilization. Partial payment will be made as follows:

1. When 2 ½ percent of the original contract amount is earned, 50 percent of the bid amount will be paid.

2. When 5 percent of the original contract amount is earned, 75 percent of the bid amount will be paid.

3. When 10 percent of the original contract amount is earned, 100 percent of the bid amount will be paid.

Nothing herein shall be construed or limit or preclude partial payments otherwise provided by the contract.

B. Partial payment will not be paid for Demobilization. Full payment will be made on the Contractor's final payment request. This will occur after the Contractor has fulfilled all of the requirements of the Contract bid documents to the satisfaction of the State and issuance of the Final Acceptance letter to the Contractor by the State.

Payment will be made under:

Item No.	Item	Pay Unit
01700.1	Mobilization (Not to exceed 6% of sums of all items, excluding this item and all allowances	Lump Sum

END OF SECTION

SECTION 01770 – CLOSE-OUT PROCEDURES

PART 1 - GENERAL

1.01 RELATED DOCUMENTS

Close-Out Procedures shall be made in accordance with Section 7.33.1 – "SUBSTANTIAL COMPLETION" of the DHHL's General Conditions.

1.02 SUMMARY

A. This Section outlines the DHHL Close-Out documents requirements. It includes information about the distribution process, the format and quantities of various types of information, and the internal review process for document acceptance. Fulfillment of these requirements is a condition precedent to the Contractor receiving final payment.
   1. Project Record Documents.
   2. Operation and Maintenance Manuals.
   3. Warranties.
   4. Instruction for the State's personnel.

B. Related documents include the following:
   1. SECTION 01700 - EXECUTION REQUIREMENTS.

C. Transmittal Memo

All Close-Out documents will be submitted to the designated Construction Management with a Transmittal Memo. The Transmittal Memo must include the following information:

- Date of Conveyance:
- Project Name:
- IFB Number:
- Contract Number:
- DHHL Project Manager:

- Contractor Name:
- Contractor Address:
- Name/Transmitting Signature of Contractor Agent:
- Name/Telephone Number of Document Submitter
- List of documents transmitted

D. Document Types and Formats

Materials	Format
Transmittal Summary	
Documents Transmittal Memo	Word or Excel*
Project Operations and Maintenance	
Project manual with Specifications	Searchable PFD*
Operation and Maintenance Manuals	Searchable PDF*
Guaranty / Warranty Materials	PDF*
Testing / inspection certifications	PDF*
Record Documents	
Site survey	CAD & PDF*
Shop drawings	CAD & PDF*
As-built drawings	CAD & PDF*
Scope, Cost and Schedule data	PDF
• Final cost summary by account	
• Final schedule of valves submitted by General Contractor	
• Final schedule	
• Final Chart to provide project description and scope.	
• Final Executive Summary	
Other Documents	
Other documents – addenda, change order, project correspondence files, etc.	(As needed)*
Reports, including photographic records	PDF*
Electronic files (photos, scanned documents)	JPEG, PDF*
Building Information Model, if applicable	(As needed)*
*See notes on CAD / Electronic documents	

1.03 SUBSTANTIAL COMPLETION

A. Preliminary Procedures: Before requesting a Final Inspection to determine; remints of the GENERAL CONDITIONS.

1. Advise the Project Manager of pending insurance changeover requirements.

2. Submit specific warranties, final certifications, and similar documents.

3. Arrange to deliver tools, spare parts, extra materials, and similar items to a location designated by the Project Manager. Label with manufacturer's name and model number where applicable.

4. Complete startup testing of systems.

5. Submit test, adjust, and balance records.

6. Terminate and remove temporary facilities from Project site, along with mockups, construction tools, and similar elements.

7. Complete final cleaning requirements, including touch up painting.

8. Touch up and otherwise repair and restore marred exposed finishes to eliminate visual defects.

9. Submit the Operation and Maintenance Manual(s) for review

1.04 FINAL COMPLETION

A. Preliminary Procedures: Within 10 days from the Project Acceptance Date, complete the following items in addition to requirements of GENERAL CONDITIONS:

1. Instruct the State's personnel in operation, adjustment, and maintenance of products.

1.05 LIST OF INCOMPLETE ITEMS (PUNCH LIST)

A. Preparation: Submit 2 copies of any updated and action taken list. In addition to requirements of GENERAL CONDITIONS, include name and identification of each space and area affected by construction operations for incomplete items and items needing

correction including, if necessary, areas disturbed by Contractor that are outside the limits of construction.

1. Organize list of spaces in sequential order.

2. Include the following information at the top of each page:

   a. Project Name and Title.

   b. DHHL IFB No.

   c. DHHL Contract No.

   d. Date and page number.

   e. Name of Contractor.

1.06 PROJECT RECORD DOCUMENTS AND REQUIREMENTS

A. General:

1. Definition: "Project Record Documents", including Record Drawings, shall fulfill the requirements of "Field-Posted As-Built Drawings" listed in the GENERAL CONDITIONS.

2. Do not use Project Record Documents for daily construction purposes. Protect Project Record Documents from deterioration and loss. Provide access to Project Record Documents for Project Manager's reference during normal working hours. Maintain these documents as specified in paragraph entitled "Record Drawings" hereinafter.

3. The Design Consultant, under contract with the State, will update the drawings to show all addendum, PCD, and sketch changes. The Contractor will transmit these drawings to the Construction Manager who will sent to the Design Consultant to make all "red-line" corrections to these drawings to record the changes depicted on the Contractor's Field Posted Record ("As-Builts") by accepted drafting practices as approved by the Project Manager.

4. Where the recorded changes depicted on the Contractor's Field Posted Record ("As-Builts") are in the form of shop drawings, the Contractor shall provide those shop drawings in the same material and size as the drawings transmitted to the Contractor. The new drawing sheets shall be titled and numbered to conform to the construction drawings and

clearly indicate what information they supercede in the actual construction drawings. For example a new drawing that replaces drawing M-3, could be numbered M3a.

5. The Contractor shall bring to the attention of the Project Manager any discrepancy between the changes made by the Design Consultant and those depicted on addendum, PCD, and sketch changes. The Project Manager will resolve any conflicts.

6. Submit final Record Documents (Field Posted Record Drawings) within 10 days after the Final Inspection Date but no later than the Contract Completion Date, unless the General conditions require an earlier submittal date.

7. The Contractor shall guarantee the accuracy of its final Record Documents. The State will hold the Contractor liable for costs the State incurs as a result of inaccuracies in the Contractor's Record Documents.

8. Prepare and submit construction photographs and electronic files, damage or settlement surveys, property surveys, and similar final record information as required by the Project Manager.

9. Deliver tools, spare parts, extra materials, and similar items to a location designated by the Project Manager. Label with manufacturer's name and model number where applicable.

10. Submit final/corrected Operation and Maintenance Manual(s).

B. Record Drawings:

1. Maintain a duplicate full-size set of Field Posted Record ("As-Built's") Drawings at the job site. Clearly and accurately record all deviations from alignments, elevations and dimensions, which are stipulated on the drawings and for changes directed by the Project Manager that deviate from the drawings.

2. Record changes immediately after they are constructed in place and where applicable, refer to the authorizing document (Addenda, Field Order, Change Order, or Contract Modification). Use red pencil to record changes. Make Field

Posted Record Drawings available to the Project Manager at any time so that its clarity and accuracy can be monitored.

a. Give particular attention to information on concealed elements that cannot be readily identified and recorded later.

b. Accurately record information in an understandable drawing technique.

c. Record data as soon as possible after obtaining it. Record and check the markup before enclosing concealed installations.

d. Mark the contract drawings or the shop drawings, whichever is most capable of showing actual physical conditions, completely and accurately. Where Shop Drawings are marked, show cross-reference on contract drawings.

e. Mark important additional information that was either shown schematically or omitted from original Drawings.

f. Locate concealed building utilities by dimension from bench marks or permanent structures. Locate site utilities by dimensions, azimuth and lengths from bench marks or permanent structures.

g. Note field order numbers, Change Order numbers, Contract Modification numbers, Alternate numbers, post-construction drawing numbers (PCD) and similar identification (RFI numbers) where applicable.

h. The Contractor shall initial each deviation and each revision marking.

3. Use the final updated Contract Drawing set plus applicable shop drawings for making the final Field Posted Record Drawings submittal.

4. Certify drawing accuracy and completeness. Label and sign the record drawings.

5. Label the title sheet and on all sheets in the margin space to the right of the sheet number, written from the bottom upward, with the title “FIELD POSTED RECORD

DRAWINGS" and certification information as shown below. Provide a signature line and company name line for each subcontractor that will also certify the respective drawing. Adjust size to fit margin space.

THESE FIELD POSTED AS-BUILT DRAWINGS ARE ACCURATE AND COMPLETE.

Certified By: _____
Date:_____
Company: _____

6. Revise the Drawing Index and label the set "FIELD POSTED RECORD DRAWINGS". Include the label "A COMPLETE SET CONTAINS [_____] SHEETS" in the margin at the bottom right corner of each sheet. Quantify the total number of sheets comprising the set.

7. If the Project Manager determines a drawing does not accurately record a deviation or omits relevant information, the State will correct any FIELD POSTED RECORD DRAWINGS sheet. Contractor will be charged for the State's cost to correct the error or omission.

8. Use the final Field Posted Record Drawings sheets to create one electronic version of the set. The set shall be recorded in Adobe Acrobat PDF (Portable Document Format). Create a single indexed, bookmarked PDF file of the entire set of drawings and record on the CD. Submit one set of the final Field Posted Record Drawings sheets and the complete electronic CD set(s).

1.07 WARRANTIES

A. Submittal Time: Submit written manufacturer's warranties at request of the Project Manager for designated portions of the Work where commencement of warranties other than Project Acceptance date is indicated.

B. Organize manufacturer's warranty documents into an orderly sequence based on the table of contents of the Specifications.

1. Bind warranties and bonds in heavy-duty, 3-ring, vinyl-covered, loose-leaf binders, thickness as necessary to accommodate contents, and sized to receive 8-1/2 inch x 11-inch paper.

2. Provide heavy paper dividers with plastic-covered tabs for each separate warranty. Mark tab to identify the product or installation. Provide a typed description of the product or installation, including the name of the product and the name, address, and telephone number of Installer and prime contractor.

3. Identify each binder on the front and spine with the typed or printed title "WARRANTIES", Project Name and Title, IFB Number, Contract Number, and name of Contractor.

4. Use the final submittal of the warranties to create an electronic Adobe Acrobat PDF (Portable Document Format) version of the bound warranty documents files. Each sheet shall be separately scanned, at 600 DPI or better into a PDF file, indexed and recorded on a recordable compact disc (CD).

C. Provide 3 sets of manufacturer's warranties that exceed one year and one CD as part of the closing document submittals. Provide additional copies of each warranty to include in operation and maintenance manuals.

1.08 OPERATION AND MAINTENANCE MANUALS

A. Assemble complete sets of operation and maintenance data indicating the operation and maintenance of each system, subsystem, and piece of equipment not part of a system. Include operation and maintenance data required in individual Specification Sections and as follows:

The Contractor shall bind and turn over to the Construction Management three (3) sets of manufacturers' warranties and operating data and/or maintenance manuals of each system, subsystem, and piece of equipment not part of a system, instructions or schedules for all equipment and special materials requiring them, and associated copies of testing reports and certificates. The three (3) binders will categorize and index each piece of equipment and material included using a Construction Specifications Institute (CSI) format to be provided by the DHHL, and shall be clearly marked noting "project specific" equipment, model numbers, and equipment cut sheets, value tag charts, electrical panel charts and other applicable information. As mentioned above, all pages of the manuals must be submitted in digital format. Such manuals will be collected and organized by the Contractor and submitted to the Construction Management, after review by the Construction Management, prior to the issuance of

the certificate of Substantial Completion. Except for the changes noted in this section, the Contractor will follow the procedure outlined in the Standard General Conditions. Include operation and maintenance data required in individual Specification Sections and as follows:

1. Operation Data:

    a. Emergency instructions and procedures.

    b. System, subsystem, and equipment descriptions, including operating standards.

    c. Operating procedures, including startup, shutdown, seasonal, and weekend operations.

    d. Description of controls and sequence of operations.

    e. Piping diagrams.

2. Maintenance Data:

    a. Manufacturer's information, Material Safety Data Sheets, and a list of spare parts.

    b. Name, address, and telephone number of installer or supplier.

    c. Maintenance procedures.

    d. Maintenance and service schedules for preventive and routine maintenance.

    e. Maintenance record forms.

    f. Sources of spare parts and maintenance materials.

    g. Copies of maintenance service agreements.

    h. Copies of warranties and bonds.

B. Organize the Operation and Maintenance Manuals into suitable sets of manageable size. Submit two (2) sets prior to final inspection, bound in 8-1/2 x 11 inch text pages. Bind and index data in heavy-duty, "D" type 3-ring, vinyl-covered, loose-leaf binders, in thickness necessary to accommodate contents, with pocket inside the covers to receive folded oversized sheets. Binder

color shall be maroon, or if not available red. Identify each binder on front and spine with the printed title "OPERATION AND MAINTENANCE MANUAL", Project Name and Title include building number when appropriate, DHHL Contract Number, IFB Number, Prepared For*:* Department of Hawaiian Home Lands*,* Prepared By*:* [Contractor] and Volume Number. Each binder is a single volume.

C. Electronic Format

1. Provide all information (narratives, drawings and manual) on a Compact Disc (CD). Provide drawings and plans prepared for the O&M Manuals drawn electronically and saved as a PDF file. Name and index the files for ease of identification and updates.

2. Provide the complete O&M Manual using Adobe Acrobat PDF (Portable Document Format) files. Each sheet shall be separately scanned into a PDF file, indexed, bookmarked, hyperlinked to the table of contents and recorded on a compact disc (CD). Scanned documents shall be scanned at 600 DPI or better. Indexes and bookmarks may be highlighted or colored text. The final submittal shall include written instructions for installing, accessing and retrieving information from the compact disc.

D. Pre-Final Submittal: Submit two (2) printed sets of Pre-Final Operation and Maintenance Manuals, for review by the DHHL Project Manager, at least five (5) days prior to scheduled final inspection. Manuals shall be marked as Pre-Final. Make any correction noted before submitting the final Operation and Maintenance Manuals.

1. The user and the DHHL will each keep one (1) copy of the Pre-Final submittal to operate and maintain the facility from the Project Acceptance Date through submission of the final submittal. Therefore, the submittal shall contain all the required information that is available at the time of submission.

2. One (1) set will be returned with comments. Additional review comments may include problems discovered during the O&M Manual's review, site validation, and facility start up and will be provided to the Contractor after facility Project Acceptance Date.

E. Final Submittal: Use the final submittal of the manuals to create the electronic PDF file version of the bound Operation and Maintenance Manuals documents. Include the Submittal (100 percent) review comments along with a response to each item. Provide six (6) Final sets of the printed manuals and six (6) Final compact discs, (CDs) as part of the closing document submittal. Final printed manual and disks shall be marked as Final.

PART 2 - PRODUCTS

2.01 MATERIALS

A. Cleaning Agents: Use cleaning materials and agents recommended by manufacturer or fabricator of the surface to be cleaned. Do not use cleaning agents that are potentially hazardous to health or property or that might damage finished surfaces.

PART 3 - EXECUTION

3.01 FINAL CLEANING

A. General: Execute final cleaning prior to final inspection. Provide final cleaning for each phase of work prior to starting the next phase. In addition to requirements of Article 7 of the GENERAL CONDITIONS conduct cleaning and waste-removal operations to comply with local laws and ordinances and federal and local environmental and antipollution regulations.

B. Cleaning: Employ experienced workers or professional cleaners for final cleaning. Clean each surface or unit to condition expected in an average commercial building cleaning and maintenance program. Comply with manufacturers written instructions unless noted otherwise. Complete the following cleaning operations before requesting final inspection for entire Project or for a portion of Project:

1. Clean Project site, yard, and grounds, in areas disturbed by construction activities, including landscape development areas, of rubbish, waste material, litter, and other foreign substances.

2. Sweep paved areas broom clean. Remove petrochemical spills, stains, and other foreign deposits resulting from construction activities.

3. Rake grounds that are neither planted nor paved to a smooth, even-textured surface.

4. Remove tools, construction equipment, machinery, and surplus material from Project site.

5. Clean exposed exterior and interior hard-surfaced finishes to a dirt-free condition, free of stains, films, and similar foreign substances. Avoid disturbing natural weathering of exterior surfaces. Restore reflective surfaces to their original condition.

6. Remove debris and surface dust from limited access spaces, including: roofs, gutters, downspouts, drainage systems, plenums, shafts, trenches, equipment vaults, manholes, attics, and similar spaces.

7. Sweep concrete floors broom clean in unoccupied spaces.

8. Vacuum carpet and similar soft surfaces, removing debris and excess nap; shampoo if visible soil or stains remain.

9. Clean transparent materials, including mirrors and glass in doors and windows. Remove temporary labels, glazing compounds and other noticeable, and vision-obscuring materials. Replace chipped or broken glass and other damaged transparent materials. Polish mirrors, transparent glass, and glossy surfaces, taking care not to scratch surfaces.

10. Remove labels that are not permanent.

11. Touch up and otherwise repair and restore marred, exposed finishes and surfaces. Replace finishes and surfaces that cannot be satisfactorily repaired or restored or that already show evidence of repair or restoration.

a. Do not paint over “UL” and similar labels, including mechanical and electrical nameplates.

12. Replace disposable air filters and clean permanent air filters. Clean the exposed surface of diffusers, registers, and grills to a sanitary condition.

13. Clean ducts, blowers, and coils if units were operated without filters during construction.

14. Leave Project clean and ready for occupancy.

C. Comply with safety standards for cleaning. Do not burn waste materials. Do not bury debris or excess materials on the State's property. Do not discharge volatile, harmful, or dangerous materials into drainage and sewer systems or onto State property. Remove waste materials from Project site and dispose of lawfully.

D. Adjust operation Products and equipment to ensure smooth and unhindered operation.

PART 4 – MEASUREMENT AND PAYMENT

4.01 BASIS OF MEASUREMENT AND PAYMENT

Work under this section will not be measured nor paid for separately, but shall be considered incidental to and included in the bid prices for the various items of work in this project.

END OF SECTION

SECTION 02100 - SITE PREPARATION

PART 1 – GENERAL

1.01 Description:

This description details clearing, grubbing, protecting trees, vegetation, and other objects designated to remain, removing and disposing of vegetation, debris, and unwanted materials from the house lot parcel and other areas designated in the contract documents or by the Engineer. Perform clearing and grubbing in advance of grading operations.

Clearing is defined as removing and disposing of all unwanted surface materials, such as trees, brush, grass, weeds, downed trees, and other material.
Grubbing is defined as removing and disposing of all unwanted vegetative matter from underground, such as stumps, roots, buried logs, and other debris.
Debris is defined as usable or unwanted material produced by clearing and grubbing.

PART 2 – PRODUCTS – NOT USED

PART 3 - EXCUTION

3.01 CONSTRUCTION

A. Best Management Practices (BMP) – ensure that all BMP measures are in place before clearing and grubbing starts. If BMP measure is removed temporarily to accommodate construction operations, reinstall before end of workday. The silt fence location is along the west and north property lines of the house lot parcel (see enclosed TMK), about 300 linear feet in length.

B. Limits – the clearing and grubbing work is intended to be within the house lot parcel. Any work outside of the house lot parcel requires prior approval by Department of Hawaiian Home Lands (DHHL), Engineer, and the affected adjacent property owner.

C. Clearing – clear all surface objects, including trees, logs, roots of downed trees, brush, residue of agricultural, grass, weeds, concrete, masonry, and unwanted materials, such as lumber, trash, and loose debris.

Preserve trees, shrubs, plants, and other objects designated to remain within the established limits.

Protect remaining trees and shrubbery from injury or damage. No trees shall be removed until all tree protection zones are established and approved by the Engineer. Cut trees to be removed without injuring trees and shrubbery that are to remain.

D. Grubbing – grub areas below natural ground surface of vegetative and unwanted material interfering with proposed work, within limits specified.

Leave in place, all undisturbed and sound stumps and nonperishable solid objects that will be more than 3 feet below subgrade and embankment slopes. Leave in place, stumps and nonperishable solid objects that extend less than 3 inches above the ground line when they are outside the excavation and embankment areas. Cut stumps flush or below the final slope line.
Backfill stump holes and other holes with embankment materials and compact with the clearing and grubbing equipment.

E. Removal and Disposal of Material – remove material and debris, and dispose of at an authorized disposal site. Obtain written authorization from property owners and government authorities for disposal locations outside road-right-of-way limits.
Leave roadway and adjacent areas with neat and finished appearance. Dispose of slashings, flammable material, and other debris within or adjacent to road right-of-way. Do not burn material or debris. Do not consider work completed until final cleaning, unless otherwise directed.

END OF SECTION

SECTION 02270 – TEMPORARY SOIL EROSION CONTROL

PART 1 – GENERAL

1.01 GENERAL CONDITIONS: The General Conditions and Special Condition preceding these specifications shall govern this section of the work.

1.02 WORK INCLUDED: Submit three (3) sets of the erosion control materials for approval by the Project Manager. Furnish all labor, materials, services, equipment and related items necessary to implement the temporary erosion control measures, submitted separately, as required by these specifications and as ordered by the Project Manager during the life of the contract to control water pollution through the use of berms, dikes, dams, sediment basins, fiber mats, netting, gravel, mulches, grasses, slope drains, and other erosion control devices or methods.

A. Temporary erosion and siltation control measures as described herein shall be applied to any erodible material within this project, including local material sources and work areas.

B. The Contractor shall be responsible for providing the necessary erosion control measures which are shown on the plans or which may be ordered by the Project Manager. All grading operations shall be performed in conformance with the applicable provisions of the "Water Pollution Control and Water Quality Standards" contained in the "Public Health Regulations," State Department of Health.

C. The Contractor shall be responsible for promptly (next day after storms) removing all silt and debris resulting from his work and deposited in drainage facilities, roadways, neighboring lands, and other areas.

1.03 RELATED WORK IN OTHER SECTIONS

Site Preparation & Earthwork ..... Section 02200 & Section 02300

PART 2 – PRODUCTS

2.01 MATERIALS

A. Mulches: To be bagasse, hay, straw, fiber mats, netting, wood cellulose, bark, wood chips, or other suitable material acceptable to the Project Manager and shall be reasonably clean and free of noxious weeds and deleterious materials.

B. Slope Drains: To be constructed of fiber mats, plastic sheets, or other materials acceptable to the Project Manager.

PART 3 – EXECUTION

3.01 TEMPORARY EROSION CONTROL

A. The Project Manager has the authority to limit the surface area exposed by clearing and grubbing and to limit the surface area exposed by excavation, borrow and fill operations. The Project Manager may also direct the Contractor to provide immediate, permanent, or temporary pollution control measures to prevent contamination of streams, lakes, ponds, drainage channels and pipes, roads, neighboring lands, and other areas.

Except for specified measures which may be shown on the plans, the Contractor shall determine the appropriate erosion control measures to use. Such work may involve the construction of temporary berms, dikes, dams, sediment basins, and slope drains, and the use of temporary mulches, mats, and grassing, or the construction and use of other control devices or methods as necessary to control erosion.

B. The Contractor shall incorporate all erosion control measures shown in the plans. The erosion controls may be modified as necessary to adjust to conditions that develop during construction. All modifications are subject to approval by the Project Manager.

C. The Contractor shall limit the surface area exposed by grubbing, stripping of topsoil, and grading to that which is necessary for him to perform the next operation and which is within his capability and progress in keeping the finish grading, mulching, grassing, and other such pollution control measures current.

The grubbing of the vegetative root mat and stumps and the stripping of topsoil shall be confined within the limits of grading which can be actively and continuously prosecuted within 15 calendar days. The area to be graded shall be limited to the minimum area necessary to accommodate the Contractor's equipment and work force.

Any area remaining bared or cleared for more than 10 calendar days and which is not within the limits of active construction shall be immediately hydro-mulch seeded or remedied as directed by the Project Manager at the Contractor's expense without cost to the Department. All areas where finish grading has been completed shall be grassed within three calendar days after the completion of grading for that area.

D. The Contractor shall, at the end of each work operation in any one day, shape the earthwork in such a manner as to control and direct the runoff to minimize the erosion of soils. He shall construct earth berms along the top edges of embankments or along the property line with adjacent properties, streams and water channels, to intercept any runoff. Temporary slope drains shall be provided by carry runoff from the top of cuts and fills. Temporary facilities for controlled discharges shall be provided for runoff impounded, directed, or controlled by project activities or by any erosion control measure employed.

E. Cut slopes shall be shaped, topsoil added if necessary, and planted as the work progresses. In no case shall the exposed surface be greater than 15 feet in height. Whenever major excavation is suspended or halted and the slope is bared for more than 15 consecutive days, the exposed surfaces shall be hydro-mulch seeded or protected as directed by the Project Manager at the Contractor's expense without cost to the Department of Hawaiian Home Lands.

Fill slopes shall be finished as specified and in accordance with the requirements outlined for cut slopes above.

F. Construction of berms, cofferdams, or other such construction in or near the vicinity of streams, ponds, waterways, or other bodies of water shall be with approved materials.

G. The temporary erosion and siltation control measures outlined in these specifications are minimum requirements and shall not preclude the provision of any additional measures which the Contractor may deem necessary. Damages caused by the erosion of soils and the pollution of downstream areas shall be the responsibility of the Contractor and all costs for repairing, correcting, replacing and cleaning damaged or polluted facilities shall be borne by the Contractor.

END OF SECTION

SECTION 02300 - EARTHWORK

PART 1 – GENERAL

1.01 DESCRIPTION:

A. Furnish materials, labor and equipment required to accomplish all excavation, filling and grading as indicated on the drawings and specified herein.

B. The Contractor shall be responsible for examining the site and determine for himself the existing conditions.

C. Obvious conditions of the site existing on the date of the bid opening shall be accepted as part of the work, even though they may not be clearly indicated on the drawings and/or described herein or may vary there from.

D. All debris of any kind accumulated from clearing and earthwork shall be disposed of offsite. The Contractor shall make all necessary arrangements relative to the proposed disposal location.

E. Dust and Erosion Control measures as specified in SPECIAL CONDITIONS shall continue throughout the extent of this project.

F. The requirement in this section is applicable to all new construction areas and to future construction areas under this contract.

1.02 CLEARING AND GRUBBING: The Contractor shall clear off and remove from the entire area within the area to be improved, all vegetations, stumps, large roots, buried logs, garbage and other unsuitable material.

1.03 REMOVAL AND REPAIR WORK: The Contractor shall exercise every precaution to preserve and protect any items which are to remain or be relocated. Portions of pavement which are to remain shall be saw-cut neat and true to line. Restore all pavements upon completion of the work.

1.04 SEQUENCE OF WORK: All sequence of work shall be subject to the acceptance of the Contracting Officer.

1.05 PROTECTION:

A. Barricades: The Contractor shall erect temporary barricades to prevent unauthorized people from entering into the project site and/or to the extent as acceptable by the Engineer.

B. Adequate precautions shall be taken before commencing and during the course of the work to ensure the protection of life, limb and property.

C. The Contractor shall protect from damage all surrounding structures, trees, plants, grass, pavements, etc.

D. Any damage shall be repaired or replaced by the Contractor to the satisfaction of the Project Manager at no cost to the State.

E. The utility trenches and other deep site excavations shall be shored and braced by the Contractor in accordance with the applicable Hawaii Occupational Safety and Health Division (HIOSH) requirements.

1.06 PERMITS: The Contractor shall obtain and pay for necessary permits prior to the commencement of work.

1.07 MAINTAINING TRAFFIC:

A. The Contractor shall conduct operations with minimum interference to streets, driveways, traffic, activities, etc.

B. When necessary, the Contractor shall provide, erect and maintain lights, barriers, etc., as required by traffic and safety regulations with special attention to protection of life.

1.08 CONSTRUCTION LINES, LEVELS AND GRADES:

A. The Contractor shall verify all lines, levels, elevations and improvements indicated on the drawings prior to any clearing, excavation or construction.

B. At the Contractor's cost, all existing lines and grades shall be verified by a Surveyor licensed in the State of Hawaii before the start of any work.

C. The laying out of new lines, establishment of finish grades and staking out the entire work shall be done by a licensed Surveyor at the Contractor's cost. He shall be solely responsible for the accuracy. Erect and maintain substantial batter boards showing construction lines and levels.

1.09 SUBMITTALS:

A. Submit in accordance with SECTION 01300 – SUBMITTALS.

B. Fill Testing and Quality Control: The Contractor shall retain and pay for the services of a geotechnical engineering firm to provide monitoring and testing services. The geotechnical engineer shall be a Civil Engineer,

licensed in the State of Hawaii, and shall have practiced geotechnical engineering for at least ten (10) years.

C. The site preparation and site grading shall be continuously monitored and tested by the Contractor's geotechnical engineer. Intermittent density tests shall be performed on exposed subgrade, fills, and backfills to determine whether the specified levels of compaction are being consistently attained. The Contractor's geotechnical engineer shall compile the daily observations, test data, and test results into a weekly submittal to the Engineer.

1.10 CLEAN UP: Clean up and remove all debris accumulated from construction operations from time to time, when and as directed by the Project Manager. Upon completion of the construction work and before final acceptance of work, remove all surplus materials, equipment, etc., and leave entire job site clean and neat.

PART 2 – PRODUCTS

2.01 MATERIALS:

A. Excavated and re-used material for subsoil fill as specified herein.

B. Imported subsoil material accepted by the Contractor's geotechnical engineer and specified herein.

PART 3 – EXECUTION

3.01 PREPARATION:

A. Identify required lines, levels, contours and datum.

B. Locate and identify existing utilities that are to remain and protect them from damage.

C. Notify utility companies to remove and/or relocate any utilities that are in conflict with the proposed improvements.

D. Protect plant life, lawns, fences, existing structures, paving and curbs from excavating equipment and vehicular traffic.

E. Protect benchmarks, property corners and all other survey monuments from damage or displacement. If a marker needs to be removed it shall be referenced by a licensed land surveyor and replaced, as necessary, by the same.

F. Remove from site, the material encountered in grading operations that, in the opinion of the Engineer, is unsuitable or undesirable for backfilling, subgrade or foundation purposes. Dispose of in a manner satisfactory to the Engineer. Backfill areas with layers of suitable material and compact as specified.

3.02 EXCAVATION FOR FILLING AND GRADING:

A. Classification of Excavation: Contractor shall submit a bid that acknowledges he has investigated the project site to determine type, quantity, quality, and character of excavation work to be performed. Excavation shall be considered unclassified excavation.

B. Perform excavation using capable, well-maintained equipment and methods acceptable to the Project Manager and the governing agencies.

C. When performing grading operations during periods of wet weather, provide adequate drainage and ground water management to control moisture of soils.

D. Shore, brace, and drain excavations as necessary to maintain safe, secure, and free of water at all times.

E. Excavated onsite clayey silt shall be completely stripped from the proposed building sites, walkways, and paving areas. Excavated basalt and clinker shall be crushed to a well-graded consistency with no rock fragments larger than 3 inches in maximum dimension prior to reuse as fill material.

F. Excavation work shall be done in accordance with the “soils report”.

3.03 FILLING AND SUBGRADE PREPARATION:

A. Fill areas to contours and elevations as shown on the plans and required by the roadway and unit sections with onsite materials or select borrow.

B. Both cut and fill areas under building sites, walkways, and paving areas shall be stripped of the surface clayey silt down to either the basalt layer or

sandy gravel (clinker) at the commencement of grading work. Removal of the clayey silt shall extend a minimum of 5 feet laterally beyond the cut and fill areas.

C. Prepare cut and fill areas and complete fill work in accordance with the “soils report”.

D. Areas exposed by excavation or stripping and on which subgrade preparation for building, roadway and sidewalk areas are to be performed shall be scarified to a minimum depth of 6” and compacted to a minimum of 95% of maximum density, in accordance with ASTM D 1557, at a moisture content at least 2% above the optimum moisture content. These areas shall then be proof rolled with a minimum 20-ton vibratory drum roller for a minimum of eight passes to help detect and collapse near-surface cavities and/or voids. Proof rolling operations shall be performed in the presence of the Contractor’s geotechnical engineer or the Engineer. Areas of failure shall be excavated and recompacted as stated above.

E. Fill materials used in preparation of subgrade for building, roadway and sidewalk areas shall be placed in lifts or layers not to exceed 8" loose measure and compacted to a minimum density of 95% of maximum density, in accordance with ASTM D 1557 at a moisture content at least 2% above the optimum moisture content. Fill subgrades shall be proof rolled with a large vibratory drum roller (minimum static weight of at least 20 tons) for a minimum of eight passes. Proof rolling operations shall be performed in the presence of Contractor’s geotechnical engineer or the Project Manager.

F. Material imported from off-site shall be accepted by the Engineer.

G. Fill materials used in preparation of subgrade for future slab-on-grade areas shall be placed in lifts or layers not to exceed 8" loose measure and compacted to a minimum density of 95% of maximum density, in accordance with ASTM D 1557 at a moisture content at least 2% above the optimum moisture content. Scarifying, moisture-conditioning and recompacting subgrade prior to placement of cushion fills for future slabs-on-grade shall be the responsibility of the future Building Contractor.

H. Structural fill shall be used as fill material within the proposed building footprint, sidewalk, and roadway areas. Imported structural fill shall consist of well-graded, non-expansive granular material with no particles larger than 3 inches in largest dimension, and shall contain between 8 and 20 percent particles passing the No. 200 sieve. The plasticity index (P.I.) of that portion of the soil passing the No. 40 sieve shall not be greater than 10. The structural fill material shall have a laboratory CBR value of 12 or more and shall have a maximum swell of 1 percent or less when tested in accordance with ASTM D 1882. Excavated onsite basalt or clinker material may be reused as structural fill, provided the material is crushed to a well-graded consistency with rock fragments no larger than 3 inches in largest dimension.

3.04 MAINTENANCE OF SUBGRADE FOR ROADWAY:

A. Finished subgrade for roadway shall be verified to ensure proper elevation and conditions for construction above subgrade.

B. Protect subgrade from excessive wheel loading during construction, including concrete trucks and dump trucks.

C. Remove areas of finished subgrade found to have insufficient compaction and replace in a manner that will comply with compaction requirements by use of material equal to or better than on-site subgrade material. Surface of subgrade after compaction shall be hard, uniform, smooth, stable, and true to grade and cross-section.

D. The subgrade below sidewalk areas shall be kept moist with moisture content of not less than 1% below the optimum moisture content prior to placing sidewalk base course.

3.05 FINISH GRADING:

A. Grade all areas where finish grade elevations or contours are indicated on Drawings, other than paved areas and buildings including excavated areas, filled and transition areas, and landscaped areas. Graded areas shall be uniform and smooth, free from rock, debris, or irregular surface changes. Finished subgrade surface shall not be more than 0.10 feet above or below the established finished subgrade elevation, and all ground surfaces shall vary uniformly between indicated elevations.

B. The areas not covered by asphalt paving, or concrete slabs up to the contract zone limit shall be graded to conform to the finish contours, with the allowance for 6” depth of topsoil. Finished grading shall be done in such a manner as to prevent localized ponding of surface drainage. Jetting or ponding of water is not allowed as a method of compacting the backfill.

C. Replant or replace any grass, shrubs, bushes, or other vegetation disturbed by construction using corrective measures at no cost to the County of Honolulu.

D. Grading work shall conform to the County of Maui Codes. The Contractor shall take the necessary precautions to prevent drainage of water into the construction area.

E. Grading work shall be done in accordance with the recommendations of the “soils report”.

3.06 CLEAN UP: Clean up and remove all debris accumulated from construction operations for time to time, when and as directed by the Inspector. Upon completion of the construction work and before final acceptance of work, remove all surplus materials, equipment, etc., and leave entire jobsite clean and neat.

END OF SECTION

STATE OF HAWAII
DEPARTMENT OF HAWAIIAN HOME LANDS

SCATTERED LOT IMPROVEMENTS FOR FIVE (5) KEAUKAHA LOTS IN TRACT 1

LOT 58-B	TMK	3-2-1-021:072	LOT 131	TMK	3-2-1-021:010
LOT 59-B	TMK	3-2-1-021:029	LOT 279	TMK	3-2-1-023:071
LOT 63-A	TMK	3-2-1-021:100			

WAIAKEA, SOUTH HILO, HAWAII
IFB-16-HHL-014

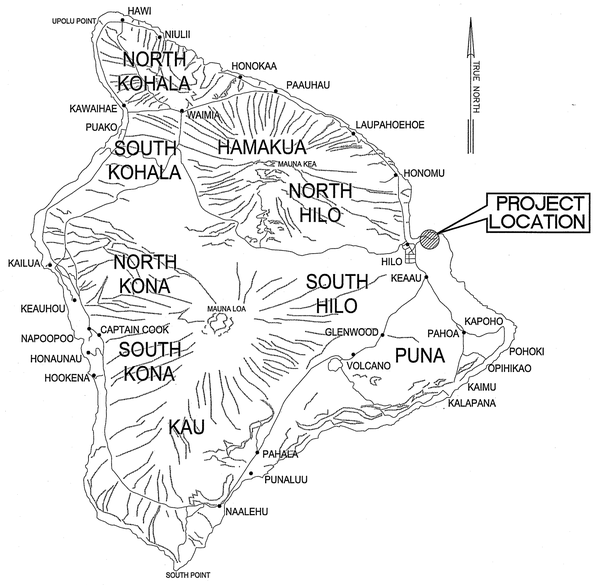

ISLAND OF HAWAII
NOT TO SCALE

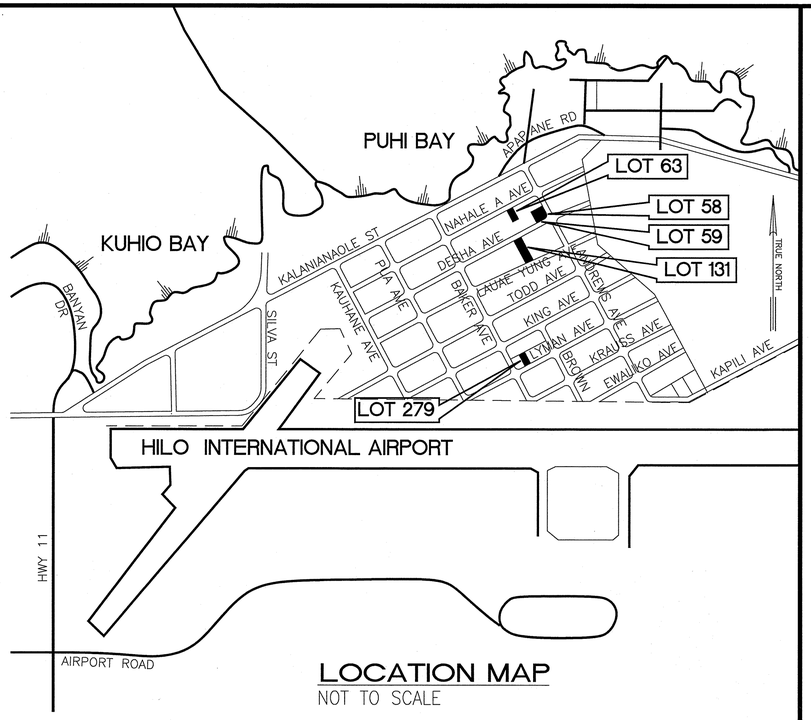

LOCATION MAP
NOT TO SCALE

I N D E X

DESCRIPTION	PLAN SHEET NO.
LOT 58	1 THRU 10
LOT 59	1 THRU 9
LOT 63	1 THRU 12
LOT 131	1 THRU 14
LOT 279	1 THRU 9
LOT 413	1 THRU 9

APPROVED BY:

CHAIRMAN, HAWAIIAN HOMES COMMISSION
STATE OF HAWAII

DATE: 1/26/16

No.	DATE	DWG.	CHK.	REVISIONS

PRINTS TO DATE

This work was prepared by me or under my supervision and to the best of my knowledge, this project will be under my observation.
Exp. 04-30-16
Wesley R. Segawa & Associates, Inc.

DENNIS K. W. LEE LICENSED PROFESSIONAL ENGINEER No. 4004-C HAWAII U.S.A.

WRSA
Wesley R. Segawa and Associates, Inc.
Committed to Quality Performance & Value
Civil & Structural Engineers
101 Silva Street, Suite 201 Hilo, Hawaii 96720-4755
Telephone: (808) 935-4677 Fax: (808) 935-2070

Project Title: SCATTERED LOT IMPROVEMENTS FOR FIVE (5) KEAUKAKA LOTS IN TRACT 1

Sheet Title: TITLE SHEET

DESIGN BY:	DRB
DRAWN BY:	DRB
CHECKED BY:	DL
APPROVED BY:	DL
DATE:	2015
SCALE:	AS NOTED
FILE No.	W1302.44

DRAWING No. T-1

SHEET No. 1 OF 10 SHTS.

STATE OF HAWAII
DEPARTMENT OF HAWAIIAN HOME LANDS

KEAUKAHA TRACT 1 IMPROVEMENTS

LOT 58-B-1 and LOT 58-B-2

WAIAKEA, SOUTH HILO, HAWAII
TAX MAP KEY: (3) 2 - 1 - 021: 072
IFB-16-HHL-014
SUBDIVISION APPLICATION NO: SUB-15-001465

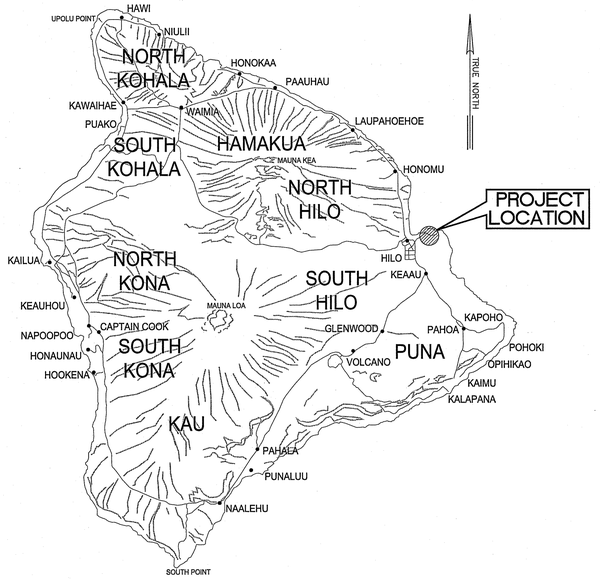

ISLAND OF HAWAII
NOT TO SCALE

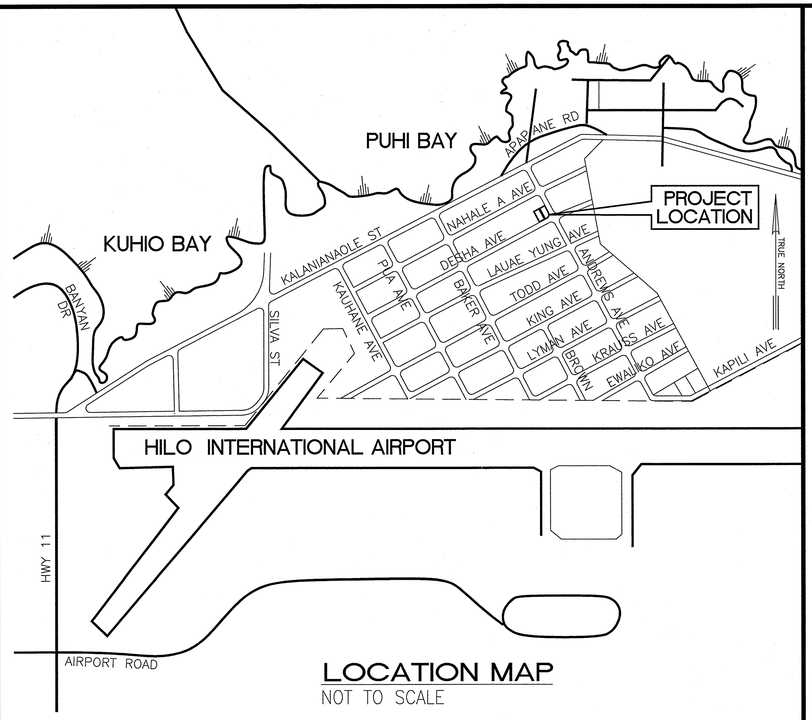

LOCATION MAP
NOT TO SCALE

I N D E X

SHEET NO.	DESCRIPTION	DRAWING NO.
1	TITLE SHEET	T-1
2	MISCELLANEOUS NOTES	C-1
3	WATER NOTES & DETAILS	C-2
4	WASTEWATER COLLECTION NOTES	C-3
5	GRADING AND DRAINAGE PLAN	C-4
6	UTILITY PLAN	C-5
7	SHALLOW DRYWELL DETAILS	C-6
8	SANITARY SEWER DETAILS	C-7
9	EROSION CONTROL (BMP) PLAN	C-8
10	DIMENSION PLAN	C-9

APPROVED BY:

CHAIRMAN, HAWAIIAN HOMES COMMISSION STATE OF HAWAII	DATE: 1/26/16
MANAGER, CHIEF-ENGINEER, DEPARTMENT OF WATER SUPPLY COUNTY OF HAWAII	DATE:
DIRECTOR, DEPARTMENT OF ENVIRONMENTAL MANAGEMENT COUNTY OF HAWAII	DATE:
DIRECTOR, PLANNING DEPARTMENT COUNTY OF HAWAII FOR GRADING PURPOSES ONLY;	DATE:
DIRECTOR, DEPARTMENT OF PUBLIC WORKS COUNTY OF HAWAII	DATE:

No.	DATE	DWG	CHK	REVISIONS
1				
2				
3				

PRINTS TO
DATE

This work was prepared by me or under my supervision and construction of this Project will be under my observation. Exp. Date: 4-30-16

DENNIS K. W. LEE LICENSED PROFESSIONAL ENGINEER No. 4004-C HAWAII USA

Wesley R. Segawa & Associates, Inc.

WRSA
Wesley R. Segawa and Associates, Inc.
Committed to Quality Performance & Value
Civil & Structural Engineers
101 Silva Street, Suite 201 Hilo, Hawaii 96720-4755
Telephone: (808) 935-4677 Fax: (808) 935-2070

Project Title: KEAUKAHA TRACT 1 IMPROVEMENTS LOTS 58-B-1 AND 58-B-2

Sheet Title: TITLE SHEET

DESIGN BY:	DRB
DRAWN BY:	DRB
CHECKED BY:	DL
APPROVED BY:	DL
DATE:	2015
SCALE:	AS NOTED
FILE No.	W1302.44

DRAWING No. T-1

SHEET No. 1 OF 10 SHTS.

GRADING NOTES:

1. ALL GRADING WORK SHALL CONFORM TO CHAPTER 10 OF THE HAWAII COUNTY CODE. SHOULD A GRADING PERMIT BE REQUIRED, NO WORK SHALL COMMENCE UNTIL THE DEPARTMENT OF PUBLIC WORKS (DPW) APPROVES A GRADING PERMIT.
2. THE CONTRACTOR SHALL REMOVE ALL SILT AND DEBRIS DEPOSITED IN DRAINAGE FACILITIES, ROADWAYS AND OTHER AREAS RESULTING FROM HIS WORK. THE COSTS INCURRED FOR ANY NECESSARY REMEDIAL ACTION BY THE DPW, SHALL BE PAYABLE BY THE CONTRACTOR.
3. THE CONTRACTOR, AT HIS OWN EXPENSE, SHALL KEEP THE PROJECT AND SURROUNDING AREAS FREE FROM DUST NUISANCES. THE WORK SHALL BE IN CONFORMANCE WITH THE AIR POLLUTION CONTROL RULES OF THE STATE DEPARTMENT OF HEALTH, HAR 11-60.1, and FUGITIVE DUST.
4. ALL GRADING OPERATIONS SHALL BE PERFORMED IN CONFORMANCE WITH THE APPLICABLE PROVISIONS OF THE HAWAII ADMINISTRATIVE RULES, TITLE 11, CHAPTER 55, WATER POLLUTION CONTROL AND CHAPTER 54, WATER QUALITY STANDARDS, AND TO THE EROSION AND SEDIMENTATION CONTROL STANDARDS AND GUIDELINES OF THE DEPARTMENT OF PUBLIC WORKS, COUNTY OF HAWAII.
5. THE CONTRACTOR SHALL SOD OR PLANT ALL SLOPES AND EXPOSED AREAS IMMEDIATELY AFTER THE GRADING WORK HAS BEEN COMPLETED.
6. FILLS ON SLOPES STEEPER THAN 5:1 SHALL BE KEYED.
7. THE CONTRACTOR SHALL INFORM THE DPW OF THE LOCATION OF THE DISPOSAL AND/OR BORROW SITE(S) REQUIRED FOR THIS PROJECT WHEN AN APPLICATION FOR A GRADING PERMIT IS MADE. THE DISPOSAL AND/OR BORROW SITE(S) MUST ALSO FULFILL THE REQUIREMENTS OF THE GRADING ORDINANCE.
8. NO GRADING WORK SHALL BE DONE ON SATURDAYS, SUNDAYS, AND HOLIDAYS ANYTIME WITHOUT PRIOR APPROVAL FROM THE ENGINEER. GRADING WORK ON NORMAL WORKING DAYS SHALL BETWEEN THE HOURS OF 7:00 A.M. TO 3:00 P.M.
9. FILLS SHALL BE COMPACTED TO 90 PERCENT (90%) OF MAXIMUM DENSITY PER ASTM D-1557 TEST.
10. THE CONTRACTOR SHALL REMOVE ALL VEGETATION BEFORE PLACING FILLS ON NATURAL GROUND SURFACE.

    ESTIMATED EARTHWORK QUANTITIES:

    TOTAL EXCAVATION: 0 CU. YDS.
    TOTAL EMBANKMENT: 766 CU. YDS.

11. THE QUANTITIES SHOWN ARE FOR GRADING PERMIT PURPOSES ONLY. THE CONTRACTOR SHALL BE RESPONSIBLE FOR DETERMINING THE EXACT QUANTITIES FOR BIDDING PURPOSES.

EARTHWORK QUANTITIES SHOWN WERE TAKEN FROM EXISTING GROUND TO FINISH GRADE.

TOTAL AREA TO BE GRADED 0.22 ACRES

SOLID WASTE CONSTRUCTION NOTES:

1. UNLESS OTHERWISE SPECIFIED, THE CONTRACTOR IS RESPONSIBLE FOR THE PROPER HANDLING, STORAGE AND/OR DISPOSAL OF ALL WASTE GENERATED BY THIS CONSTRUCTION INCLUDING GRUBBING AND EXCESS EXCAVATED MATERIAL. ANY MATERIAL BROUGHT TO THE COUNTY LANDFILLS WILL BE SUBJECTED TO THE INSTITUTED TIPPING FEE SYSTEM, WITH NO EXCEPTIONS OR EXEMPTIONS
2. ALL WASTES GENERATED BY CONSTRUCTION, INCLUDING GRUBBING, DEMOLITION AND EXCESS EXCAVATION MATERIAL MAY BE BROUGHT TO THE WEST HAWAII OR THE HILO LANDFILL. THE CONTRACTOR SHALL CHECK WITH THE SOLID WASTE DIVISION FOR DISCLOSURE OF THE CURRENT LANDFILL FEE AND CONSIDERATION OF THAT FEE SHALL BE INCLUDED IN THE CONTRACTOR'S BID SUM.
3. CONSTRUCTION, DEMOLITION AND GRUBBING MATERIAL SHALL NOT BE DEPOSITED AT ANY OF THE COUNTY TRANSFER STATIONS, BUT SHALL BE TRANSPORTED FOR DISPOSAL AT EITHER THE WEST HAWAII OR HILO LANDFILL.
4. ASBESTOS MATERIAL MUST BE SEPARATED, DOUBLE BAGGED AND LANDFILLED IN ACCORDANCE WITH REGULATIONS OF THE SOLID WASTE DIVISION, DEPARTMENT OF ENVIRONMENTAL MANAGEMENT. INFORMATION MAY BE OBTAINED BY CALLING THE DIVISION AT (808) 961-8339 BETWEEN 7:00 AM AND 4:00 PM MONDAY THROUGH FRIDAY.
5. ALL GREEN WASTE GENERATED FROM GRUBBING WORK, SHALL BE SEPARATED AND DEPOSITED AT THE GREEN WASTE AREA AT THE HILO OR WEST HAWAII DISPOSAL SITE. (NOTE: NO TREATED LUMBER IS ALLOWED IN THE GREEN WASTE)
6. RECYCLE AS MUCH OF THE SOLID WASTE MATERIAL GENERATED BY THIS CONSTRUCTION AS POSSIBLE. EXCESS MATERIAL SHALL BE DISPOSED OF PROPERLY.
7. CONTRACTOR SHALL SUBMIT A REPORT PRIOR TO THE COMMENCEMENT OF WORK, PER SOLID WASTE DEMOLITION PLAN GUIDELINES, AS AMMENDED. AVAILABLE AT THE COUNTY OF HAWAII, DEPARTMENT OF ENVIRONMENTAL MANAGEMENT OFFICE.

NOTES FOR WORK WITHIN THE ROAD-OF-WAY

1. THE CONTRACTOR SHALL VERIFY THE LOCATION OF ALL EXISTING UTILITIES, WHETHER SHOWN ON THE PLAN OR NOT, AND SHALL BE RESPONSIBLE FOR THE REPAIR OR REPLACEMENT OF SAME IN THE EVENT OF DAMAGES DUE TO HIS CONSTRUCTION PARACTICES. THE CONTRACTOR SHALL COORDINATE HIS WORK WITH THE RESPECTIVE UTILITY COMPANIES.
2. THE CONTRACTOR SHALL PROVIDE AND INSTALL ALL TRAFFIC CONTROL DEVICES IN CONFORMANCE WITH THE CURRENT EDITION OF THE "MANUAL ON UNIFORM TRAFFIC CONTROL DEVICES FOR STREETS AND HIGHWAYS," AND AS DIRECTED BY THE ENGINEER.
3. THE PROPOSED UTILITY LINE LOCATION SHALL BE LAID OUT IN THE FIELD PRIOR TO THE CONDUCTING OF THE FIELD REVIEW BY THE ENGINEER.
4. FIELD ADJUSTMENTS SHALL BE MADE AS DIRECTED BY THE ENGINEER PRIOR TO THE COMMENCEMENT OF ANY UTILITY LINE WORK.
5. THE CONTRACTOR SHALL PROVIDE AT LEASE ONE (1) LANE FOR TRAFFIC MOVEMENT AT ALL TIMES. TWO (2) LANES FOR TRAFFIC MOVEMENT SHALL BE PROVIDED BETWEEN THE HOURS OF 3:00 P.M. TO 8:00 A.M.
6. THE EXISTING PAVEMENT SHALL BE SAW-CUT BEFORE COMMENCEMENT OF TRENCHING WORK.
7. ANY PAVEMENT OUTSIDE THE CONTRACT ZONE LIMITS DAMAGED AS A RESULT OF CONSTRUCTION OPERATIONS SHALL BE RESTORED TO ITS ORIGINAL CONDITION, OR BETTER, AS DIRECTED BY THE ENGINEER.
8. A TEMPORARY COLD MIX PATCH SHALL BE APPLIED IMMEDIATELY UPON COMPLETION OF THE BACKFILLING OPERATION AND SHALL BE MAINTAINED BY THE CONTRACTOR UNTIL A PERMANENT PATCH IS AUTHORIZED BY THE ENGINEER.
9. NO MATERIAL, EXCEPT THE TRENCH EXCAVATED MATERIAL, SHALL BE STOCKPILED CLOSER THAN SIX (6) FEET FROM THE EXISTING EDGE OF PAVEMENT.
10. NO CONSTRUCTION EQUIPMENT SHALL BE PARKED WITHIN THE ROAD RIGHT-OF-WAY IN SUCH A MANNER THAT THE EQUIPMENT WILL OBSTRUCT THE NORMAL MOVEMENT AND SIGHT DISTANCE OF THE DRIVING MOTORIST, EXCEPT DURING ACTUAL WORKING HOURS.
11. EXCEPT DURING ACTUAL WORKING HOURS, ALL SIGNS THAT DO NOT PERTAIN TO THE CONSTRUCTION ACTIVITY, SUCH AS "MEN WORKING" AND "FLAGMAN AHEAD" SHALL BE COVERED OR LAID DOWN. HOWEVER, ALL SIGNS NECESSARY FOR THE SAFETY OF THE PUBLIC SHALL BE MAINTAINED.
12. ANY PAVEMENT MARKINGS, STRUCTURES, AND APPURTENANCES (WITHIN OR OUTSIDE OF THE CONTRACT ZONE LIMITS) DAMAGED AND/OR WORN AWAY UNDER THE PERMIT SHALL BE REPAINTED OR RECONSTRUCTED AS DIRECTED BY THE ENGINEER.
13. NO TRENCHING SHALL BE LEFT OPEN FOR MORE THAN FIVE (5) WORKING DAYS.
14. SHOULD TRENCING OCCUR THROUGH AN EXISTING SIDEWALK, OR SHOULD DAMAGES OCCUR TO THE SIDEWALK AS A RESULT OF ANY CONSTRUCTION WORK, THE FOLLOWING PROCEDURE SHALL BE UTILIZED TO REPAIR THE SIDEWALK:

    A. ALL PORTLAND CEMENT CONCRETE TO BE REMOVED SHALL FIRST BE CUT WITH A CONCRETE SAW THAT HAS A DIAMOND OR CARBORUNDUM ABRASIVE WHEEL. THOSE CUTS SHALL BE MADE TO A DEPTH EQUAL TO AT LEAST ONE-FOURTH OF THE DEPTH OF THE SLAB, OR ENOUGH AS IS DEEMED NECESSARY BY THE DEPARTMENT OF PUBLIC WORKS, TO PERMIT BREAKING OUT THE BALANCE OF THE CONCRETE WITHOUT SPALLING OFF THE EXPOSED EDGES OF THE SLAB LEFT IN PLACE.

    B. IF ANY CONCRETE BLOCK IS TOUCHED, THE WHOLE BLOCK SHALL BE REMOVED AND LATER REPLACED, UNLESS A MINOR VARIATION IS AUTHORIZED BY THE DPW OR IT'S REPRESENTATIVE.

    C. ANY DAMAGES TO ADJACENT AREAS DUE TO SETTLEMENT OR TO ANY OTHER EFFECTS WHATSOEVER CAUSED BY THE CONSTRUCTION WORK SHALL BE PROPERLY REPAIRED AND CORRECTED.

STRUCTURAL BEST MANAGEMENT PRACTICES (BMPS):

1. THE CONTRACTOR SHALL INSPECT EROSION AND SEDIMENT CONTROL MEASURES WEEKLY AND AFTER 0.5 INCHES OF RAINFALL.
2. IF REPAIRS TO OR MAINTENANCE OF THE CONTRACTOR'S EROSION CONTROL MEASURES ARE NECESSARY, THE CONTRACTOR SHALL INITIATE THE REPAIRS OR MAINTENANCE WITHIN TWENTY-FOUR (24) HOURS AFTER INSPECTION AND NOTING OF THE DEFICIENCY.

    REPAIRS AND MAINTENANCE MAY INCLUDE THE FOLLOWING:

    A. REPLACING GEO-JUTE FABRIC WHEN TEARS ARE FOUND, AND ENSURING THAT THE FABRIC IS SECURELY ATTACHED FIRMLY IN THE GROUND.

    B. RESTORING BARE SPOTS AND WASHOUTS, AND ENSURING HEALTY PLANT GROWTH IN BOTH TEMPORARY AND PERMANENT SEEDED AND PLANTED AREAS.

3. THE CONTRACTOR SHALL MAKE EVERY EFFORT TO INSTALL STRUCTURAL BMPS AS NEAR TO THE POLLUTANT SOURCE AS PRACTICABLE. INLET PROTECTION SHALL SERVE AS THE LAST MEASURE TO PREVENT POLLUTANTS FROM ENTERING THE STORM DRAIN SYSTEM.
4. THE CONTRACTOR SHALL BACKFILL TRENCHES AND PROVIDE COLD MIX PATCHES TO MATCH ADJOINING PAVEMENT GRADE AT THE END OF EACH WORK DAY.
5. STABILIZED CONSTRUCTION ENTRANCE:

    ALL POINTS OF EGRESS AND INGRESS TO A SITE SHALL BE PROTECTED WITH A STABILIZED CONSTRUCTION ENTRANCE, 20' X 20' X 8" THICK CRUSHED ROCK LAYER OVER A GEOTEXTILE FABRIC BASE IN THE LOCATION(S) SHOWN ON THE EROSION CONTROL PLAN.

6. DUST CONTROL:

    DUST CONTROL, INCLUDING DUST BARRIERS, WATERING, ETC., SHOULD BE APPLIED TO REDUCE DUST EMISSIONS. THE CONTRACTOR, AT HIS OWN EXPENSE, SHALL KEEP THE PROJECT AREA AND SURROUNDING AREA FREE FROM DUST NUISANCE. THE WORK SHALL BE IN CONFORMANCE WITH THE AIR POLLUTION CONTROL STANDARDS CONTAINED IN HAWAII ADMINISTRATIVE RULES: CHAPTER 11-60, "AIR POLLUTION CONTROL",

7. SEDIMENT BARRIERS OR TRAPS:

    SEDIMENT TRAPPING DEVICES SUCH AS FENCES, TRAPS, BASINS OR BARRIERS SHALL BE USED DOWN SLOPE OF ALL DISTURBED AREAS AND AROUND THE BASE OF ALL MATERIAL STOCKPILES.

8. INLET PROTECTION:

    ALL STORM DRAIN INLETS ON SITE, AND THOSE OFFSITE WHICH MAY RECEIVE RUNOFF FROM THE SITE SHALL USE AN INLET PROTECTION DEVICE.

9. PERMANENT STABILIZATION:

    ALL DISTURBED AREAS SHALL BE PERMANENTLY STABILIZED PRIOR TO REMOVING EROSION AND SEDIMENT MEASURES. ALL TEMPORARY EROSION AND SEDIMENT CONTROL MEASURES SHALL BE REMOVED WITHIN 30 DAYS AFTER FINAL SITE STABILIZATION OR AFTER THE TEMPORARY MEASURES ARE NO LONGER NEEDED. TRAPPED SEDIMENT AND AREAS OF DISTURBED SOIL WHICH RESULT FROM THE REMOVAL OF THE TEMPORARY MEASURES SHALL BE IMMEDIATELY PERMANENTLY STABILIZED.

LEGEND:

A.C.	ASPHALT CONCRETE	NIC	NOT IN CONTRACT
ARV	AIR RELEASE VALVE	OH	OVERHEAD
BOT.	BOTTOM	PAV'T	PAVEMENT
BW	BOTTOM WALL	PE	PAD ELEVATION
C.O.	CLEAN OUT	S	SEWER OR SPREAD
COCN.	CONCRETE	SDMH	STORM DRAIN MANHOLE
CRM	CONCRETE RUBBLE MASONARY	SMH	SEWER MANHOLE
D	DIAMETER OR DRAIN	SS	SANITARY SEWER
E/ELEC.	ELECTRIC	ST.	STREET
ELEV./E	ELEVATION	STA.	STATION
FFE	FINISH FLOOR ELEVATION	TB	TOP OF BOX
F.H.	FIRE HYDRANT	TG	TOP OF GRATE
G.P.	GUARD POST/GUY POLE/GATE POST	TP	TOP PIPE
H	HEIGHT	TS	TOP STEM
IG	INVERT GRADE	TV	TOP VALVE
INV.	INVERT	TW	TOP WALL
M.B.	MAIL BOX	U.P.	UTILITY POLE
MH	MANHOLE	U.P./S.L.	UTILITY POLE W/STREET LIGHT
MON	MONUMENT	W	WATER
		WM	WATER METER
		WMH	WATER MANHOLE
		WV	WATER VALVE BOX

No.	DATE	DWG. CHK.	REVISIONS
△			
△			
△			

PRINTS TO

DATE

This work was prepared by me or under my supervision and construction of this project is under my observation.
Exp. 04-30-16
Wesley R. Segawa & Associates, Inc.

DENNIS K. W. LEE LICENSED PROFESSIONAL ENGINEER No. 4004-C HAWAII USA

WRSA
Wesley R. Segawa and Associates, Inc.
Committed to Quality Performance & Value
Civil & Structural Engineers
101 Silva Street, Suite 201 Hilo, Hawaii 96720-4755
Telephone: (808) 935-4677 Fax: (808) 935-2070

Project Title: KEAUKAHA TRACT 1 IMPROVEMENTS LOTS 58-B-1 AND 58-B-2

Sheet Title: MISCELLANEOUS NOTES

DESIGN BY:	DRB
DRAWN BY:	DRB
CHECKED BY:	DL
APPROVED BY:	DL
DATE:	2015
SCALE:	AS NOTED
FILE No.	W1302.44

DRAWING No. C-1

SHEET No. 2 OF 10 SHTS.

WATERLINE NOTES:

1. ALL WORK SHALL BE DONE ACCORDING TO THE WATER SYSTEM STANDARDS, STATE OF HAWAII, DATED 2002, AS AMENDED.
2. ALL EXISTING WATERLINES, WATERLINE, APPURTENANCES AND OTHER UTILITY LOCATIONS SHOWN ON THE PLANS ARE OBTAINED FROM THE LATEST RELIABLE SOURCES. THE CONTRACTOR SHALL BE RESPONSIBLE TO VERITY THE EXACT LOCATION OF ALL UTILITIES IN THE FIELD AND SHALL BEAR ALL COSTS FOR DAMAGE DONE DURING THE CONTRACT PERIOD.
3. THE CONTRACTOR SHALL INFORM THE D.W.S. ENGINEER 72 HOURS PRIOR TO THE BEGINNING OF ANY WATERLINE WORK AND TWO WEEKS PRIOR TO ANY CONNECTION, CHLORINATION, SHUT-OFF OR RELOCATION WORK.
4. ALL CONNECTIONS TO THE WATER SYSTEMS SHALL BE DONE BY THE D.W.S. THE CONTRACTOR SHALL PERFORM ALL EXCAVATION, BACKFILL, ROAD REPAIR, TRAFFIC CONTROL, AND PROVIDE EQUIPMENT AND MATERIALS NECESSARY TO COMPLETE THE CONNECTION.
5. THE CONTRACTOR SHALL PAY FOR ALL WORK, EQUIPMENT, AND MATERIAL FURNISHED BY THE D.W.S.
6. MINIMUM VERTICAL CLEARANCE BETWEEN WATERLINES AND OTHER UTILITIES SHALL BE 12-INCHES PROVIDED THE OTHER UTILITY IS CONCRETE JACKETED, AND 18-INCHES IF NO CONCRETE JACKETS ARE USED. IN ALL APPLICABLE INSTANCES, THE WATERLINES SHALL BE AT A GRADE HIGHER THAN OTHER UTILITIES. UTILIZE PERPENDICULAR CROSSINGS WHERE PRACTICABLE FOR WATERLINES, CENTER FULL PIPE LENGTHS AT UTILITY CROSSINGS WHENEVER POSSIBLE
7. MINIMUM HORIZONTAL CLEARANCE BETWEEN WATERLINES AND OTHER UTILITIES SHALL BE 8-FEET (CLEAR SPACE – NOT CENTERLINE TO CENTERLINE) FOR ROAD RIGHT-OF-WAYS OF 50 FEET OF LESS, AND 10-FEET FOR ROAD RIGHT-OF-WAYS OF MORE THAN 50 FEET.
8. ALL WATER SYSTEM PIPELINES, 4-INCHES OR LARGER IN DIAMETER, SHALL BE DUCTILE IRON, PUSH ON JOINTS, CLASS 52, AND ALL PIPELINES SMALLER THAN 4-INCHES IN DIAMETER SHALL BE SOFT COPPER, TYPE "K:, UNLESS OTHERWISE SPECIFIED.
9. PIPE CUSHION FOR COPPER SERVICE LATERALS SHALL BE NO. 4 MANUFACTURED FINE SAND.
10. METER BOXES FOR 5/8-INCH METERS PLACED OUTSIDE OF PAYMENT TO BE TYPE "B" PER STD DETAILS M1 & M2. METER BOXES FOR 1-INCH METERS OR FOR 5/8-INCH STD DETAIL M3.
11. RELOCATION OF EXISTING METERS SHALL BE DONE UNDER D.W.S. SUPERVISION. RELOCATION OF CUSTOMER SERVICE LINES TO RELOCATED METERS SHALL BE COPPER (TYPE "K") AND DONE BY THE CONTRACTOR. ALL WORK AND MATERIALS SHALL BE PROVIDED BY THE CONTRACTOR AND CONSIDERED INCIDENTAL TO THE RELOCATION WORK. EXISTING METER BOXES DAMAGED BY THE CONTRACTOR SHALL BE REPLACED AT THE CONTRACTOR'S COST. WHEN APPLICABLE, A DIELECTRIC UNION SHALL BE USED TO CONNECT THE COPPER PIPE TO THE CUSTOMER'S GALVANIZED IRON (G.I.) PIPE.
12. SOLDER (1/8-INCH DIA.) AND FLUX USED SHALL NOT CONTAIN MORE THAN 0.2% LEAD
13. LOTS REQUIRING A DEPARTMENT OF WATER SUPPLY APPROVED BACKFLOW PREVENTION ASSEMBLY SHALL HAVE ONE. IT MUST BE INSTALLED ON PRIVATE PROPERTY IN ACCORDANCE WITH D.W.S. STANDARD DETAIL NO. V9 AND DEPARTMENTAL STAFF MUST APPROVE THE INSTALLATION BEFORE WATER SERVICE CAN BE STARTED.
14. WHERE WATER SHUT-OFF OF MORE THAN 3 HOURS BECOMES NECESSARY, THE CONTRACTOR, AT HIS OWN EXPENSE, SHALL PROVIDE A TEMPORARARY BY-PASS LINE. THE DWS ENGINEER SHALL DETERMINE THE BY-PASS LINE SIZE. IF NECESSARY, THE DWS ENGINEER MAY REQUIRE A BY-PASS LINE, REGARDLESS OF THE EXPECTED SHUT-OFF PERIOD.
15. THE CONTRACTOR SHALL BE RESPONSIBLE FOR RECORD DRAWINGS (AS-BUILT DRAWINGS) AND THE LICENSED ENGINEER SHALL CERTIFY THE DRAWINGS AS TO ACCURACY AND SUBMIT THE DRAWINGS AND AS-BUILT TRACINGS TO THE DWS.
16. AFTER JANUARY 4, 2014, ALL BRASS PRODUCTS MUST CONFORM TO NSF STANDARD 61 AND NSF STANDARD 372 OF THE SDWA, AND BE CERTIFIED AS "LEAD-FREE" BY THE MANUFACTURER. "LEAD-FREE" IS DEFINED AS THE ALLOWABLE LEAD CONTENT OF NOT MORE THAN 0.25% IN THE WETTED SURFACE. CERTIFICATION FROM THE MANUFACTURER MUST BE SUBMITTED TO THE DEPARTMENT OF WATER SUPPLY FOR REVIEW AND APPROVAL PRIOR TO INSTALLATION. ANY BRASS PRODUCT INSTALLED WITHOUT APPROVAL MUST BE REMOVED AT NO EXPENSE TO THE DEPARTMENT.
17. BOXED WATERLINE DETAILS BELOW TAKEN FROM THE WATER SYSTEM STANDARDS.

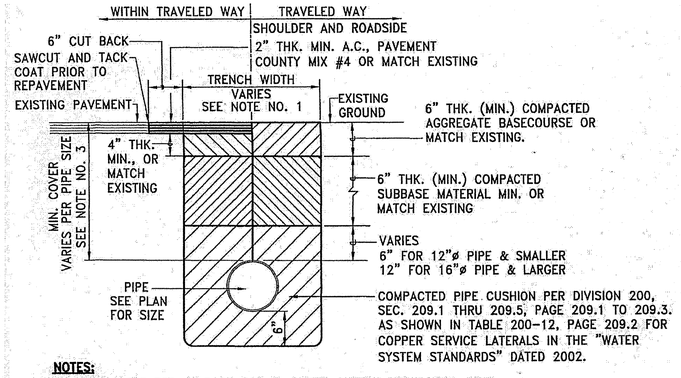

NOTES:

1. SEE TABLE 300-1, PAGE 302-3, WATER SYSTEM STANDARDS, 2002.
2. LOCAL MATERIAL MAY BE USED OUTSIDE SHOULDER AREA.
3. SEE TABLE 100-3, PAGE 102.4, WATER SYSTEM STANDARDS, 2002.
4. DRIVEWAY RESTORATION
   - A. WHERE EXISTING DRIVEWAY IS CONCRETE, 4" THK. CONCRETE REINFORCED WITH 6 X 6 X 10/10 WWM ON 4" THK. BASECOURSE SHALL BE USED IN LIEU OF THE ABOVE SECTION.
   - B. WHERE AN EXISTING DRIVEWAY IS UNPAVED, THE DRIVEWAY SHALL BE RESTORED TO A CONDITION EQUAL TO OR BETTER THAN THE EXISTING DRIVEWAY.
   - C. WHERE EXISTING DRIVEWAY IS PAVED, THE DRIVEWAY SHALL BE RESTORED AS SHOWN ABOVE
   - D. CONTRACTOR SHALL NOTIFY THE OWNER OF THE DRIVEWAY 48 HOURS BEFORE COMMENCEMENT OF ANY WORKS

1 / C-2 TYPICAL TRENCH AND PAVEMENT REPAIR SECTION FOR WATERLINES
NOT TO SCALE

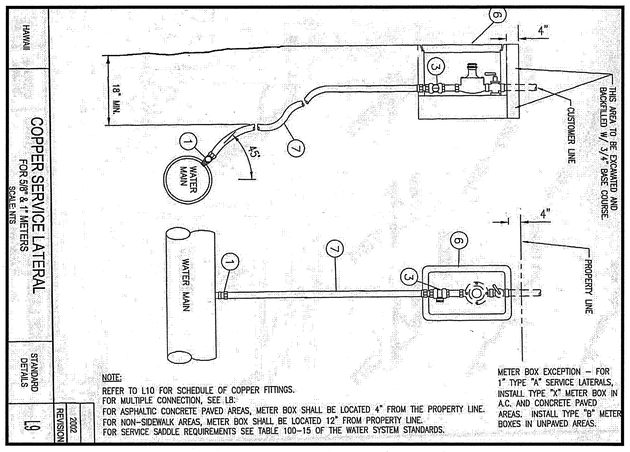

2 / C-2 TYPICAL SINGLE SERVICE LATERAL
NOT TO SCALE

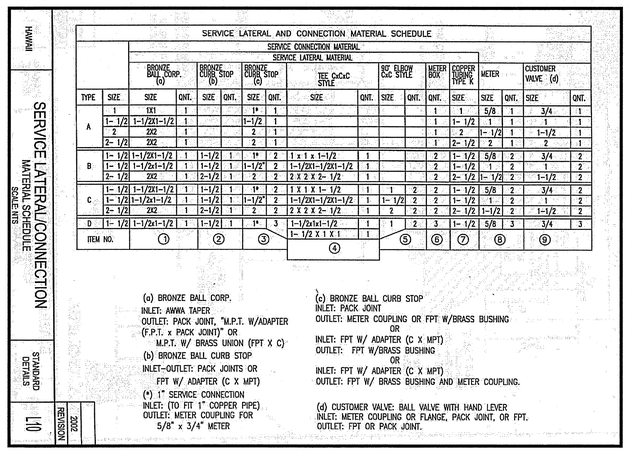

SERVICE LATERAL AND CONNECTION MATERIAL SCHEDULE

		SERVICE CONNECTION MATERIAL: SERVICE LATERAL MATERIAL: BRONZE BALL CORP. (a)		BRONZE CURB STOP (b)		BRONZE CURB STOP (c)		TEE CxCxC STYLE		90° ELBOW CxC STYLE		METER BOX	COPPER TUBING TYPE K	METER		CUSTOMER VALVE (d)	
TYPE	SIZE	SIZE	QNT.	SIZE	QNT.	SIZE	QNT.	SIZE	QNT.	SIZE	QNT.	QNT.	SIZE	SIZE	QNT.	SIZE	QNT.
A	1	TEE	1			1*	1					1	1	5/8	1	3/4	1
	1- 1/2	1-1/2X1-1/2	1			1-1/2	1					1	1- 1/2	1	1	1	1
	2	2X2	1			2	1					1	2	1- 1/2	1	1-1/2	1
	2- 1/2	2X2	1			2	1					1	2- 1/2	2	1	2	1
B	1- 1/2	1-1/2X1-1/2	1	1-1/2	1	1*	2	1 x 1 x 1-1/2	1			2	1- 1/2	5/8	2	3/4	2
	1- 1/2	1-1/2x1-1/2	1	1-1/2	1	1-1/2"	2	1-1/2X1-1/2X1-1/2	1			2	1- 1/2	1	2	1	2
	2- 1/2	2X2	1	2-1/2	1	2	2	2 X 2 X 2- 1/2	1			2	2- 1/2	1- 1/2	2	1-1/2	2
C	1- 1/2	1-1/2X1-1/2	1	1-1/2	1	1*	2	1 X 1 X 1- 1/2	1	1	2	2	1- 1/2	5/8	2	3/4	2
	1- 1/2	1-1/2x1-1/2	1	1-1/2	1	1-1/2"	2	1-1/2X1-1/2X1-1/2	1	1- 1/2	2	2	1- 1/2	1	2	1	2
	2- 1/2	2X2	1	2-1/2	1	2	2	2 X 2 X 2- 1/2	1	2	2	2	2- 1/2	1-1/2	2	1-1/2	2
D	1- 1/2	1-1/2x1-1/2	1	1-1/2	1	1*	3	1-1/2x1x1-1/2	1	1	2	3	1- 1/2	5/8	3	3/4	3
								1- 1/2 X 1 X 1	1								
ITEM NO.		①		②		③		④				⑤	⑥	⑦		⑧	⑨

(a) BRONZE BALL CORP.
INLET: AWWA TAPER
OUTLET: PACK JOINT, "M.P.T. W/ADAPTER (F.P.T. x PACK JOINT)" OR
M.P.T. W/ BRASS UNION (FPT X C)

(b) BRONZE BALL CURB STOP
INLET-OUTLET: PACK JOINTS OR
FPT W/ ADAPTER (C X MPT)

(*) 1" SERVICE CONNECTION
INLET: (TO FIT 1" COPPER PIPE)
OUTLET: METER COUPLING FOR 5/8" x 3/4" METER

(c) BRONZE BALL CURB STOP
INLET: PACK JOINT
OUTLET: METER COUPLING OR FPT W/BRASS BUSHING
OR
INLET: FPT W/ ADAPTER (C X MPT)
OUTLET: FPT W/BRASS BUSHING
OR
INLET: FPT W/ ADAPTER (C X MPT)
OUTLET: FPT W/ BRASS BUSHING AND METER COUPLING.

(d) CUSTOMER VALVE: BALL VALVE WITH HAND LEVER
INLET: METER COUPLING OR FLANGE, PACK JOINT, OR FPT.
OUTLET: FPT OR PACK JOINT.

3 / C-2 SCHEDULE OF COPPER FITTINGS
NOT TO SCALE

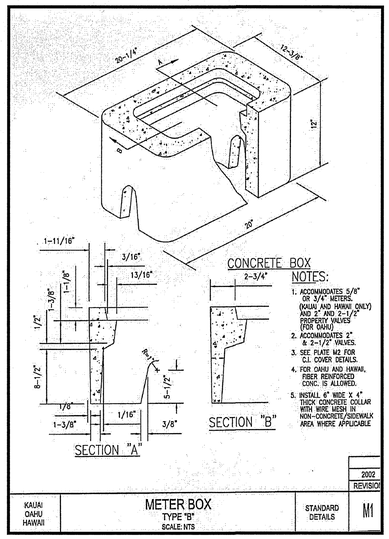

4 / C-2 METER BOX TYPE "B"
NOT TO SCALE

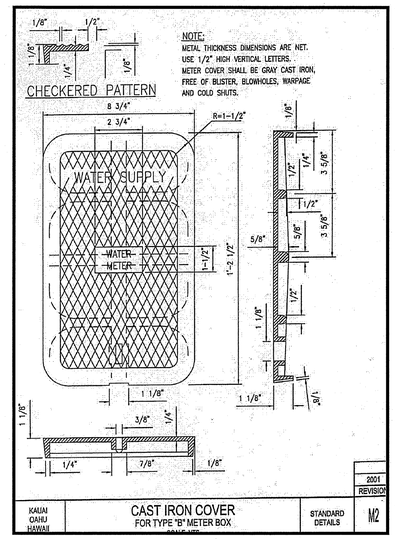

5 / C-2 CAST IRON COVER FOR TYPE "B" METER BOX
NOT TO SCALE

No	DATE	DWG CHK	REVISIONS	PRINTS TO	DATE
1					
2					
3					

This work was prepared by me or under my supervision and construction of this project will be under my observation.
Exp. date: 4/30/16
Wesley R. Segawa & Associates, Inc.
LICENSED PROFESSIONAL ENGINEER
K. W. LEE
No. 4004-C
HAWAII, U.S.A.

WRSA
Wesley R. Segawa and Associates, Inc.
Committed to Quality Performance & Value
Civil & Structural Engineers
101 Silva Street, Suite 201 Hilo, Hawaii 96720-4755
Telephone: (808) 935-4677 Fax: (808) 935-2070

Project Title: KEAUKAHA TRACT 1 IMPROVEMENTS LOTS 58-B-1 AND 58-B-2

Sheet Title: WATER NOTES & DETAILS

DESIGN BY:	DRB
DRAWN BY:	DRB
CHECKED BY:	DL
APPROVED BY:	DL
DATE:	2015
SCALE:	AS NOTED
FILE No.	W1302.44

DRAWING No. C-2

SHEET No. 3 OF 10 SHTS.

WASTEWATER COLLECTION SYSTEM NOTES:

1. THE GENERAL REQUIREMENTS AND COVENANTS OF THE DEPARTMENT OF PUBLIC WORKS, COUNTY OF HAWAI'I (JULY 1972): THE STANDARD SPECIFICATIONS FOR PUBLIC WORKS CONSTRUCTION (SEPTEMBER 1986), THE STANDARD DETAILS FOR PUBLIC WORKS CONSTRUCTION, DEPARTMENT OF PUBLIC WORKS, COUNTY OF HAWAI'I, SEPTEMBER 1984 AND THE COUNTY OF HAWAII", DEPARTMENT OF ENVIRONMENTAL MANAGEMENT, WASTEWATER DIVISION (WWD) STANDARD DETAILS (WW-1 THRU WW-9) SHALL BE APPLICABLE AND INCORPORATED HEREIN UNLESS OTHERWISE NOTED.
2. THE CONTRACTOR SHALL PROCURE ALL PERMITS AND LICENSES, PAY ALL CHARGES AND FEES AND GIVE ALL NOTICES NECESSARY AND INCIDENTAL TO THE DULY AND LAWFUL PROSECUTION OF THE WORK
3. THE CONTRACTOR SHALL FURNISH ALL LABOR, MATERIALS, AND EQUIPMENT REQUIRED FOR THE COMPLETE INSTALLATION OF THE SUBJECT WORK UNLESS SPECIFICALLY WRITTEN OTHERWISE.
4. IT SHALL BE THE CONTRACTOR'S RESPONSIBILITY TO PERFORM A CONSTRUCTION PER THE APPROVED PLANS AND SPECIFICATIONS .ANY ADDITIONS, DELETIONS OR CHANGES TO THE WASTEWATER SYSTEM SHALL MEET THE APPROVAL OF THE COUNTY OF HAWAI'I, DEPARTMENT OF ENVIRONMENTAL MANAGEMENT, WASTEWATER DIVISION.
5. INSPECTIONS SHALL BE REQUIRED FOR ALL WORK WHICH INVOLVES THE WWO'S SEWER MAINS, LATERALS, CLEANOUTS, AND ALL DETECTABLE NEW CONSTRUCTION. CALL THE WASTEWATER DIVISION AT 961-8338 AT LEAST TWO (2) WORKING DAYS IN ADVANCE TO SCHEDULE AN INSPECTION.
   a. WHEN AND AS OFTEN AS THE WWD DETERMINES THROUGH THEIR INSPECTION PROCEDURES, MATERIAL, EQUIPMENT OR WORKMANSHIP DO NOT MEET THE REQUIREMENTS, THE WWD WILL GIVE WRITTEN NOTICE OF THE NONCOMPLIANCE TO THE CONTRACTOR AND IMMEDIATE CORRECTION OF THE DEFICIENCIES SHALL BE ADDRESSED WITH THE WWD ENGINEER AND/OR THEIR REPRESENTATIVE.
   b. INSPECTION SHALL BE PERFORMED PRIOR TO BACKFILLING OR COVERING OF THE PIPE AND AFTER ALL PLUMBING WORK, IN ACCORDANCE WITH THE PLUMBING PERMIT, IS COMPLETE WITHIN THE PARCEL.
6. SEWER WORK SHALL BE SCHEDULED SUCH THAT WORK SHALL NOT BE PERFORMED ON SATURDAYS, SUNDAYS OR COUNTY OF HAWAII HOLIDAYS. IT SUCH WORK DICTATES PERFORMANCE ON THESE NON-WORKING DAYS AND AFTER NORMAL HOURS (3:30 PM TO 7:00 AM) OF OPERATION THEN, THE CONTRACTOR SHALL BE RESPONSIBLE FOR PAYMENT OF OVERTIME CHARGES TO THE WWD.
7. ALL EXISTING WASTEWATER LINE(S), WHETHER OR NOT SHOWN ON THE PLANS, IF DAMAGED DURING CONSTRUCTION, SHALL BE REPAIRED BY THE CONTRACTOR AND THE CONTRACTOR SHALL PAY ALL EXPENSES.
8. BYPASSING OR SPILLING OF SEWAGE TO THE GROUND, DRAINAGE SYSTEM OR STATE WATERS IS PROHIBITED. THE CONTRACTOR SHALL PAY PENALTIES, INCLUDING LEGAL FEES AND OTHER COSTS RELATED TO THE BYPASS AND/OR SPILL.
9. THE CONTRACTOR SHALL BE OR HAVE IN PERSON ON THE JOB SITE OR BE REPRESENTED BY A RESPONSIBLE AGENT WITH AUTHORITY TO ACT FOR THE CONTRACTOR IN CONNECTION WITH THIS PROJECT AT ALL TIMES.
10. AT ALL TIMES DURING THE WORK, KEEP THE PREMISES CLEAN AND ORDERLY, AND UPON COMPLETION OF THE WORK, REPAIR ALL DAMAGE CAUSED BY EQUIPMENT AND LEAVE THE PROJECT FREE OF RUBBISH AND EXCESS MATERIALS OF ANY KIND.

SEWER SYSTEM REQUIREMENTS

1. SEWER MAIN PIPE AND FITTINGS:
   a. ALL SEWER PIPE AND FITTINGS SHALL BE PVC SDR-26 BELL AND SPIGOT OR AN APPROVED EQUAL.
   b. LAYING OF PIPE SHALL COMMENCE AT THE LOWEST POINT, THE BELL END FACING UPSTREAM. PIPE SHALL BE FITTED TOGETHER AND MATCHED SO THAT WHEN LAID IT WILL FORM A UNIFORM AND SMOOTH INVERT.
   c. THE INTERIOR OF THE SEWER PIPE SHALL BE CLEARED OF ALL DEBRIS AND FOREIGN MATERIALS AS THE WORK PROGRESSES. EXPOSED ENDS OF SEWER PIPE SHALL BE CLOSED WITH TEMPORARY COVERS TO PREVENT EARTH AND DEBRIS FROM ENTERING THE PIPE BEFORE LEAVING THE WORKPLACE FOR THE NIGHT.
   d. BECAUSE OF THE NATURE OF PLASTIC PIPE AND FILLINGS, THE CONTRACTOR IS CAUTIONED TO EXERCISE CARE IN HANDLING, LOADING, UNLOADING, AND STORING TO AVOID DAMAGE.
2. TRENCH, PIPE BEDDING, AND BACKFILL:
   a. TRENCHES SHALL BE PROPERLY BACKFILLED AND COMPACTED AS SHOWN ON THE APPROVED PLAN.
   b. PIPE BEDDING SHALL BE CLASS B *" AGGREGATE BASE COURSE PLACED WITHIN TRENCH NOT LESS THAN 6 INCHES BUT NOT MORE THAN 8 INCHES IN COMPACTED THICKNESS, SHOULD PROVIDE UNIFORM AND ADEQUATE LONGITUDINAL SUPPORT UNDER THE PIPE, AND SHALL BE COMPACTED TO 95 PERCENT MAXIMUM DRY DENSITY UNLESS OTHERWISE NOTED ON PLANS.
   c. PIPE CUSHION SHALL BE CLASS B *" AGGREGATE BASE COURSE PROPERLY PLACED A MINIMUM OF 12' COMPACTED THICKNESS OVER THE TOP OF THE PIPE TO PROVIDE ADEQUATE SIDE SUPPORT WHILE AVOIDING VERTICAL AND LATERAL DISPLACEMENT.
   d. CONTROLLED LOW-STRENGTH MATERIAL (CLSM) SHALL BE USED AS THE FINAL TRENCH BACKFILL UNLESS OTHERWISE NOTED ON THE PLAN OR APPROVED BY THE WWD ENGINEER.
   e. COMPACTION TESTING FOR BASE COURSE MATERIAL SHALL BE PERFORMED BY AN INDEPENDENT TESTING AND QUALITY CONTROL LABORATORY. COMPACTION TESTING SHALL BE A MINIMUM OF ONE (1) TEST PER 150 LINEAL FEET OR A FRACTION THEREOF. THE ENGINEER RESERVES THE RIGHT TO INCREASE THE FREQUENCY OF COMPACTION TO MATCH FIELD CONDITIONS. TEST RESULTS SHALL BE SUBMITTED TO THE WWD ENGINEER FOR AS PART OF THE FINAL ACCEPTANCE.
3. SEWER LATERAL PIPE AND FITTINGS:
   a. NEW SEWER LATERALS AND CLEANOUT SHALL BE 6" DIAMETER, PVC SDR26 PIPE AND FITTINGS.
   b. SEWER CLEANOUTS SHALL BE LOCATED IN THE *COUNTY RIGHT-OF-WAY* WITHIN ONE FOOT OF THE PROPERTY LINE. THE CLEANOUT SHALL BE EASILY ACCESSIBLE (I.E. NOT BE BURIED OR LOCATED UNDER OR CLOSE TO ROCK WALLS, FENCES OR OTHER OBSTRUCTIONS,
   c. THE CLEANOUT SHALL BE PROVIDED A BRASS COUNTERSUNK CAP AND AN 18"X18"X18" CLASS B CONCRETE COLLAR REINFORCED WITH 1-#3 REINFORCEMENT STEEL LOOP. REFER WWD STANDARD DETAIL WW-2. IN THE EVENT THAT THE CLEANOUT IS INSTALLED WITHIN A SIDEWALK OR SIMILAR AREA HAVING CONCRETE SURFACES, THE CONCRETE COLLAR IS NOT REQUIRED.
   d. IF A CLEANOUT IS SUBJECT TO VEHICULAR OR ABNORMAL LOADING IT SHALL BE PROVIDED A TRAFFIC RATED FRAME/COVER (MODEL SBF 1246W, MANUFACTURED BY SOUTH BAY FOUNDRY OR APPROVED EQUAL) AND SHALL BE INSTALLED AS PER MANUFACTURER'S RECOMMENDATIONS. REFER WWD STANDARD DETAIL WW-4.
   e. SEWER LATERAL CONNECTIONS TO AN EXISTING SEWER MAIN MAY BE MADE WITH A WYE CONFIGURED FLEXIBLE SADDLE ROTATED 45 DEGREES ABOVE THE SEWER SPRING LINE. SEWER LATERAL SADDLE CONNECTIONS AND CORED SEWER MAIN ENTRY SHALL PROVIDE A SMOOTH AND UNOBSTRUCTED FLOW AREA. THE SEWER SADDLE SHALL COMPLETELY OVERLAY THE CORE ENTRY AREA ON THE MAIN SEWER PIPE. THE SADDLE SHALL BE SECURED TO THE MAIN SEWER PIPE WITH STAINLESS STEEL STRAPS AND JACKETED WITH CLASS 8 REINFORCED CONCRETE. THE REINFORCED JACKET SHALL COMPLETELY ENCASE THE EXISTING MAIN SEWER PIPE, BE A MINIMUM OF 6" THICK, AND EXTEND A MINIMUM OF 6" BEYOND THE SEWER SADDLE.
4. SEWER LINE ACCEPTANCE TEST:
   a. ALL NEWLY INSTALLED SEWER MAINS AND LATERALS ARE SUBJECT TO LEAKAGE AND CCTV INSPECTION PRIOR TO FINAL ACCEPTANCE AS DIRECTED BY THE WWD.
   b. LEAKAGE TESTING SHALL BE ACCOMPLISHED WITH SECTION 21.3 D OF THE STANDARD SPECIFICATIONS FOR PUBLIC WORKS CONSTRUCTION, SEPTEMBER 1986. ALL COSTS FOR TESTING SHALL BE BORNE BY THE CONTRACTOR.
   c. AN INITIAL CCTV INSPECTION WILL BE PERFORMED BY THE COUNTY AT NO COST TO THE CONTRACTOR SUBJECT TO THE CONDITIONS BELOW.
      i. THE CONTRACTOR SHALL BE RESPONSIBLE TO OBTAIN, FROM THE WWD, A COPY OF THE SEWER LINE ACCEPTANCE TEST CRITERIA PRIOR TO REQUESTING OR SCHEDULING A CCTV INSPECTION.
      ii. THE CONTRACTOR SHALL ASSIST THE COUNTY IN THE PERFORMANCE OF THE CCTV INSPECTION, SHALL BE RESPONSIBLE FOR ALL TRAFFIC CONTROL REQUIREMENTS, AND SHALL BE RESPONSIBLE FOR CLEANING OF THE LINES TO REMOVE ALL DEBRIS PRIOR TO CCTV INSPECTION. IN THE EVENT THAT PIPES ARE FOUND TO HAVE BEEN INADEQUATELY CLEANED, THE COUNTY WILL TERMINATE THE INSPECTION AND ANY SUBSEQUENT INSPECTIONS WILL BE SUBJECT TO CHARGES TO THE CONTRACTOR.
      iii. THE CONTRACTOR SHALL HAVE A SUPERVISORY REPRESENTATIVE PRESENT DURING PERFORMANCE OF THE CCTV INSPECTION.
      iv. F THE CCTV INSPECTION REVEALS CONDITIONS SUCH AS SAGS, DENTS, OUT-OF-ROUND, ETC. THEN, MANDREL TESTING IN ACCORDANCE WITH SECTION 21.3 E OF THE STANDARD SPECIFICATIONS FOR PUBLIC WORKS CONSTRUCTION, SEPTEMBER 1986 WILL BE REQUIRED AT WHICH THE COST WILL BE BORNE BY THE CONTRACTOR.
      v. CCTV INSPECTIONS WILL BE RECORDED IN VHS OR CDROM FORMAT. IN THE EVENT THAT THE CONTRACTOR REQUESTS A COPY OF THE CCTV INSPECTION, THE CONTRACTOR WILL BE CHARGED FOR THE COPY AT A RATE OF $25.00.
5. FINAL PROJECT SUBMITTALS:
   a. UPON FINAL PROJECT ACCEPTANCE SUBMIT TO WWD ONE (1) SET OF "AS-BUILT" PLANS ON VELLUM AND TWO (2) COPIED SETS AND ONE (1) SET OF ELECTRONIC DRAWINGS IN AUTOCAD 2009 VERSION AND (1) SET OF ELECTRONIC DRAWINGS IN ADOBE PDF FORMAT.
   b. IT IS MANDATORY THAT THE "AS-BUILT" PLANS SHOW CORRECTLY IDENTIFIED PROPERTY TMK NUMBERS, LOCATION OF SEWER MANHOLES, LATERALS, CLEANOUTS AND ALL OTHER MAJOR COMPONENTS OF THE WASTEWATER COLLECTION SYSTEM INCLUDING INVERT ELEVATIONS AT ALT SEWER MANHOLES, LATERAL CONNECTIONS AT THE MAIN, LATERAL ELEVATIONS AT THE CLEANOUT. SUBMITTED DOCUMENTATION SHALL BE CERTIFIED BY A LICENSED PROFESSIONAL LAND SURVEYOR ATTESTING TO THE LOCATION AND ELEVATIONS OF ALL MAJOR COMPONENTS OF THE WASTEWATER COLLECTION SYSTEM AS SHOWN ON THE AS-BUILT PLANS.

DIVISION CHIEF, WASTEWATER DIVISION
DEPARTMENT OF ENVIRONMENTAL MANAGEMENT
COUNTY OF HAWAII

DATE

No.	DATE	DWG.	CHK.	REVISIONS
△				
△				
△				

DATE	PRINTS TO

DENNIS K. W. LEE
LICENSED PROFESSIONAL ENGINEER
No. 4004-C
HAWAII U.S.A.

This work was prepared by me or under my supervision and construction of this project will be under my observation.
Exp. 04-30-16

Wesley R. Segawa & Associates, Inc.

WRSA
Wesley R. Segawa and Associates, Inc.
Committed to Quality Performance & Value
Civil & Structural Engineers
101 Silva Street, Suite 201 Hilo, Hawaii 96720-4755
Telephone: (808) 935-4677 Fax: (808) 935-2070

Project Title: KEAUKAHA TRACT 1 IMPROVEMENTS
LOTS 58-B-1 AND 58-B-2

Sheet Title: W.W.C. SYSTEM NOTES

DESIGN BY:	DRB
DRAWN BY:	DRB
CHECKED BY:	DL
APPROVED BY:	DL
DATE:	2015
SCALE:	AS NOTED
FILE No.	W1302.44

DRAWING No. C-3

SHEET No. 4 OF 10 SHTS.

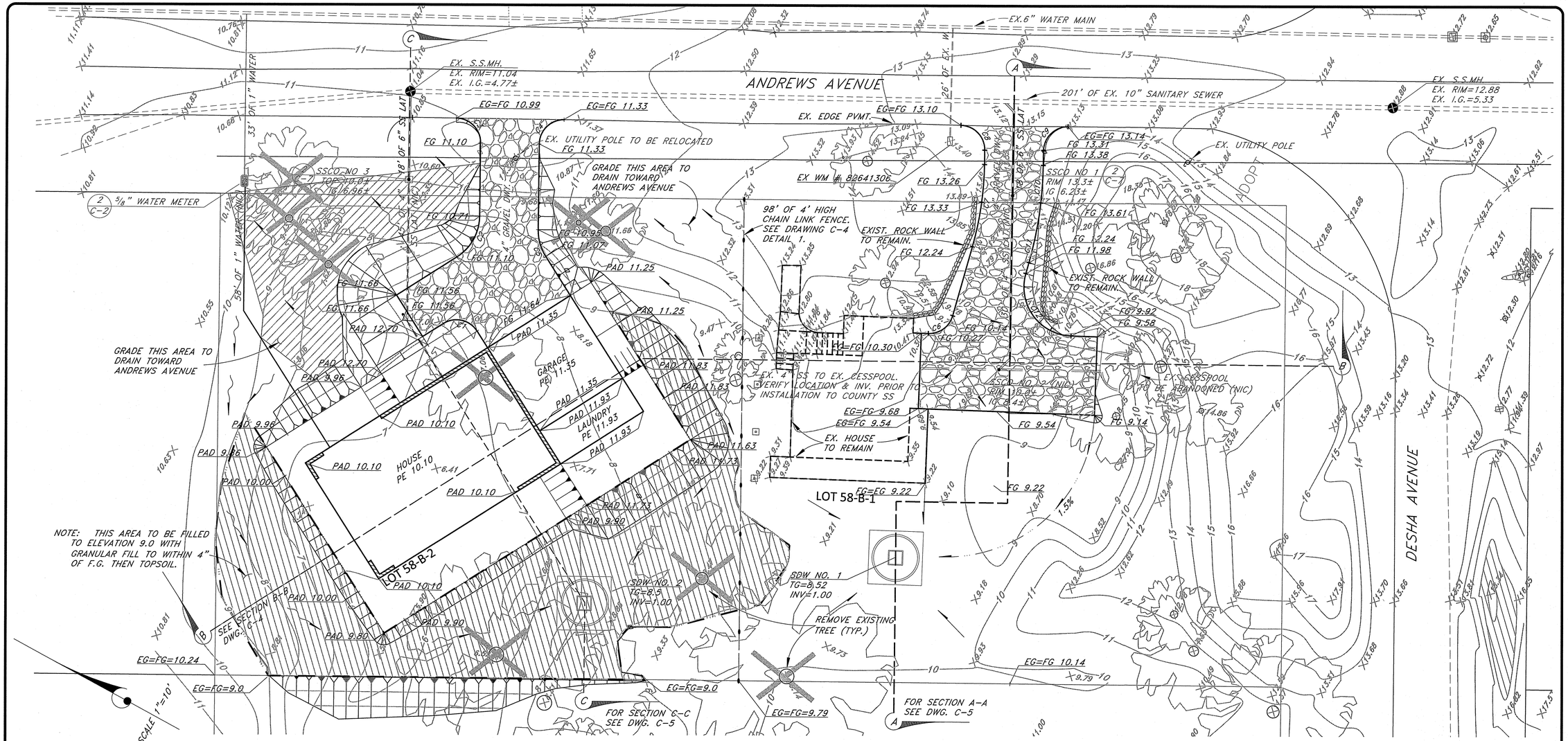

GRADING AND DRAINAGE PLAN

SCALE: 1"=10'

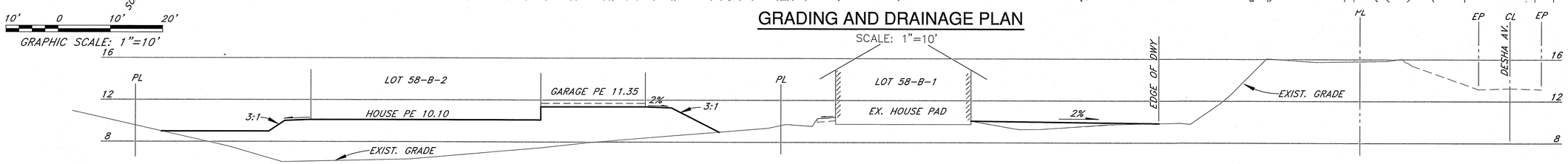

SECTION B-B SCALE:
HORIZONTAL: 1"=10'
VERTICAL: 1"=5'

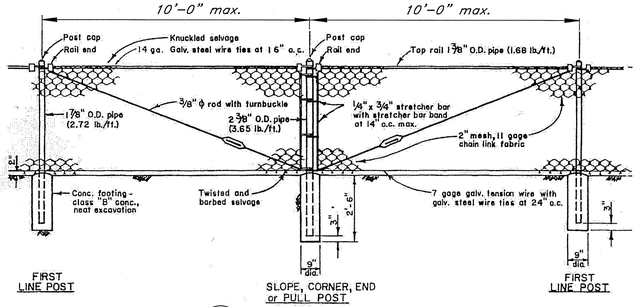

1/C-4 4' CHAIN LINK FENCE

NOTES:
1. Posts and braces shall be Schedule 40 (standard weight) pipe. Sizes specified are outside diameter.
2. All fencing material shall be galvanized steel.
3. Top rail couplings shall be located within 6" of line posts.
4. Top of concrete footing shall be crowned to shed water.

10' 0 10' 20'
GRAPHIC SCALE: 1"=10'

5' 0 5' 10'
GRAPHIC SCALE: 1"=5'

Curve Table					
Curve #	Length	Radius	Delta	Chord Direction	Chord Length
C1	7.85	5.00	90.00	N16° 02' 27"W	7.07
C2	9.96	10.00	57.06	S89° 34' 14"E	9.55
C3	7.84	5.00	89.87	N16° 57' 54"E	7.06
C4	7.87	5.00	90.13	N73° 02' 06"W	7.08
C5	5.75	10.00	32.94	S45° 25' 46"W	5.67
C6	6.65	5.00	76.23	S64° 43' 48"E	6.17

Curve Table					
Curve #	Length	Radius	Delta	Chord Direction	Chord Length
C7	17.04	65.00	15.02	N69° 38' 43"E	16.99
C8	7.80	5.00	89.36	N17° 27' 27"E	7.03
C9	7.81	5.00	89.52	N73° 06' 10"W	7.04
C10	7.69	77.00	5.73	N64° 59' 59"E	7.69
C11	12.49	77.00	9.29	N72° 30' 28"E	12.47
C12	18.11	10.00	103.77	S25° 16' 12"W	15.74

No.	DATE	DWG. CHK.	REVISIONS

PRINTS TO

DATE

This work was prepared by me or under my supervision and construction of this project is my responsibility under my observation.
Exp. 04-30-16

DENNIS K. W. LEE LICENSED PROFESSIONAL ENGINEER No. 4004-C HAWAII U.S.A.

Wesley R. Segawa & Associates, Inc.

WRSA
Wesley R. Segawa and Associates, Inc.
Civil & Structural Engineers
101 Silva Street, Suite 201 Hilo, Hawaii 96720-4755
Telephone: (808) 935-4677 Fax: (808) 935-2070
Committed to Quality Performance & Value

Project Title: KEAUKAHA TRACT 1 IMPROVEMENTS LOTS 58-B-1 AND 58-B-2

Sheet Title: GRADING AND DRAINAGE PLAN

DESIGN BY:	DRB
DRAWN BY:	DRB
CHECKED BY:	DL
APPROVED BY:	DL
DATE:	2015
SCALE:	AS NOTED
FILE No.	W1302.44

DRAWING No. C-4

SHEET No. 5 OF 10 SHTS.

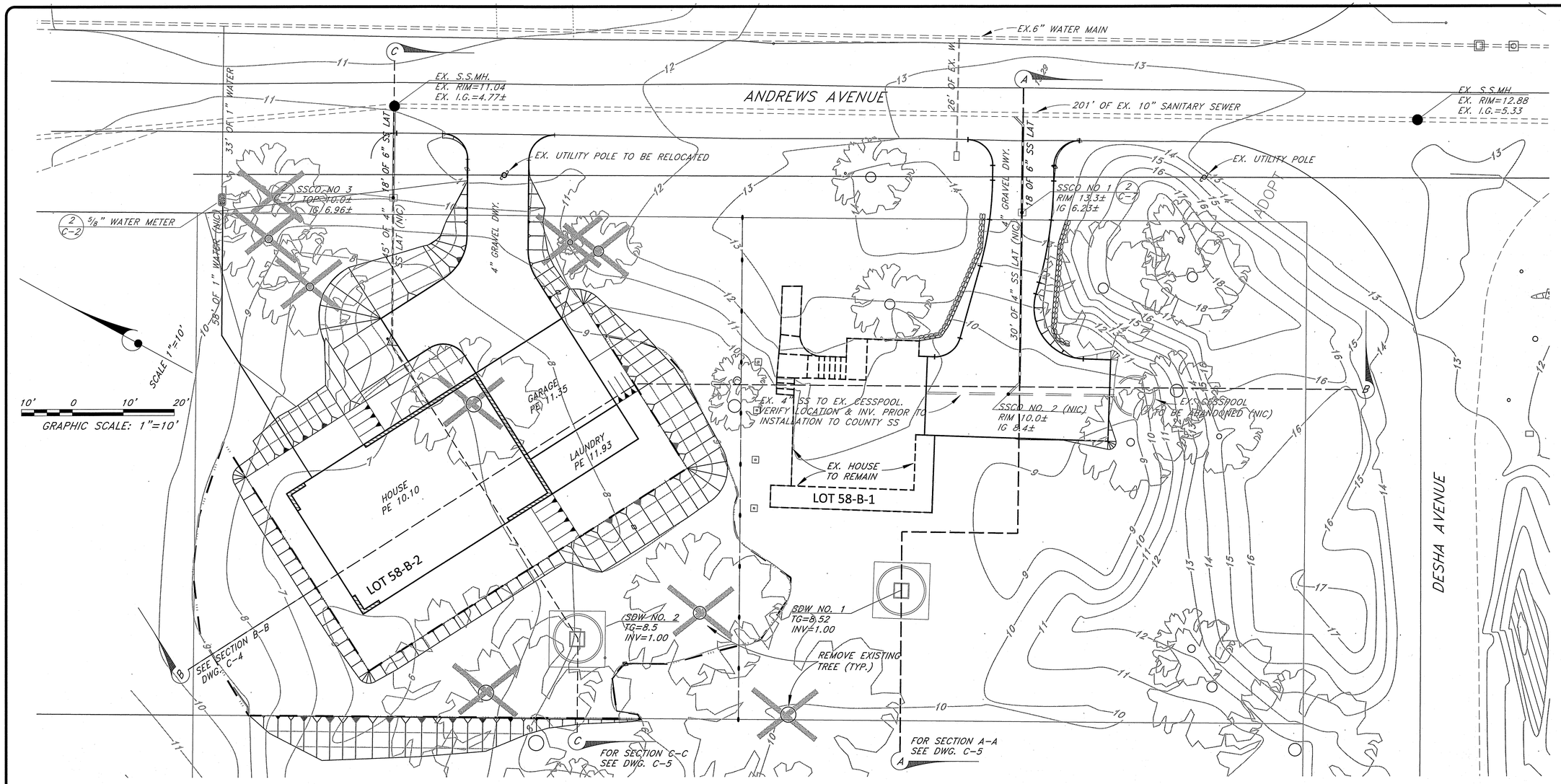

UTILITY PLAN

SCALE: 1"=10'

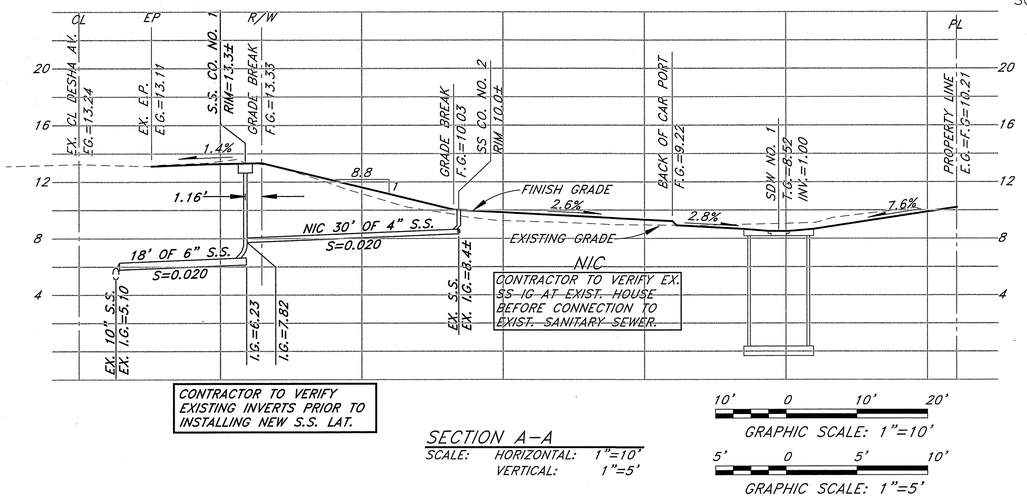

SECTION A-A

SCALE: HORIZONTAL: 1"=10'
VERTICAL: 1"=5'

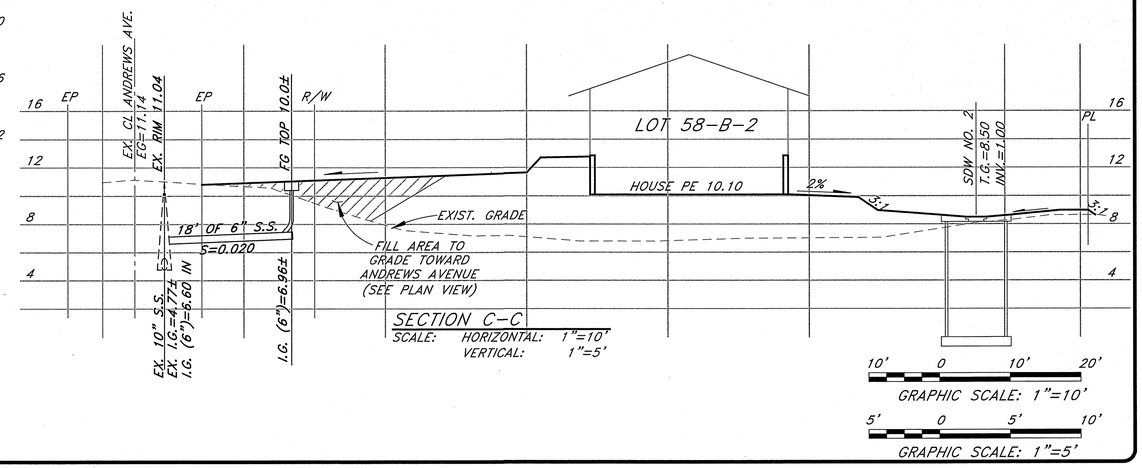

SECTION C-C

SCALE: HORIZONTAL: 1"=10'
VERTICAL: 1"=5'

No.	DATE	DWG.	CHK.	REVISIONS

PRINTS TO

DATE

This work was prepared by me or under my supervision and construction of this project will be under my observation. Exp. 04-30-16

Wesley R. Segawa & Associates, Inc.

DENNIS K.W. LEE LICENSED PROFESSIONAL ENGINEER No. 4004-C HAWAII U.S.A.

WRSA
Wesley R. Segawa and Associates, Inc.
Committed to Quality Performance & Value
Civil & Structural Engineers
101 Silva Street, Suite 201 Hilo, Hawaii 96720-4755
Telephone: (808) 935-4677 Fax: (808) 935-2070

Project Title: KEAUKAHA TRACT 1 IMPROVEMENTS LOTS 58-B-1 AND 58-B-2

Sheet Title: UJTILITY PLAN

DESIGN BY:	DRB
DRAWN BY:	DRB
CHECKED BY:	DL
APPROVED BY:	DL
DATE:	2015
SCALE:	AS NOTED
FILE No.	W1302.44

DRAWING No. C-5

SHEET No. 6 OF 10 SHTS.

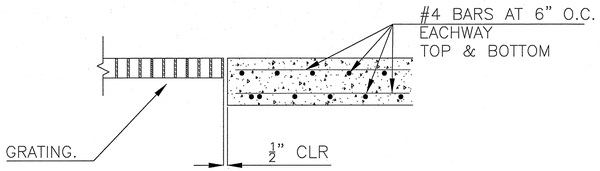

SECTION A–A
NOT TO SCALE

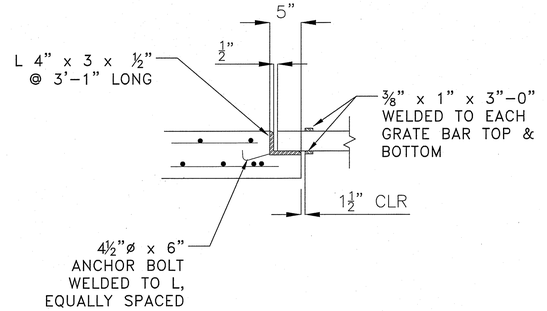

SECTION B–B
NOT TO SCALE

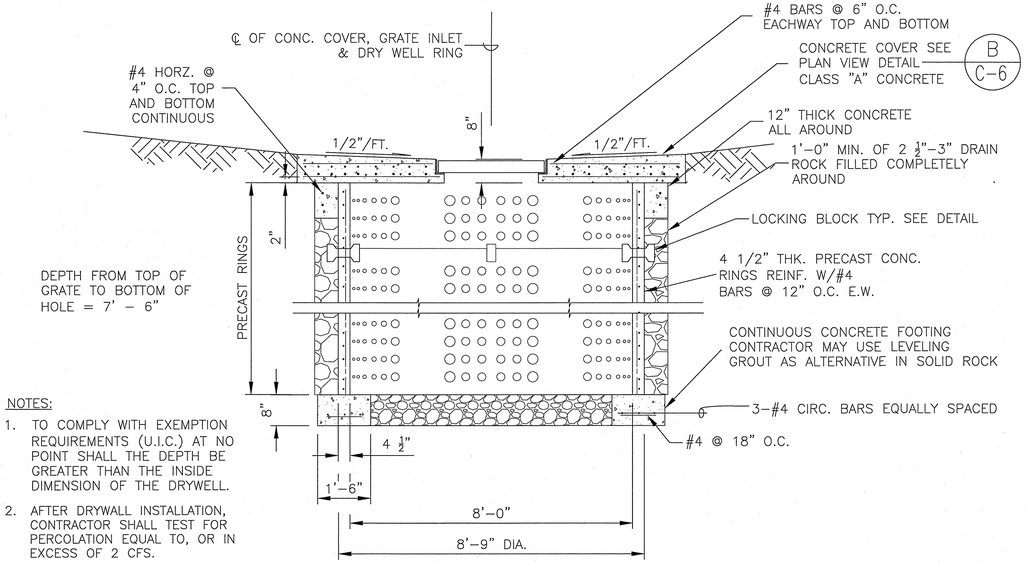

NOTES:

1. TO COMPLY WITH EXEMPTION REQUIREMENTS (U.I.C.) AT NO POINT SHALL THE DEPTH BE GREATER THAN THE INSIDE DIMENSION OF THE DRYWELL.
2. AFTER DRYWALL INSTALLATION, CONTRACTOR SHALL TEST FOR PERCOLATION EQUAL TO, OR IN EXCESS OF 2 CFS.

CONCRETE RING DRYWELL
NOT TO SCALE

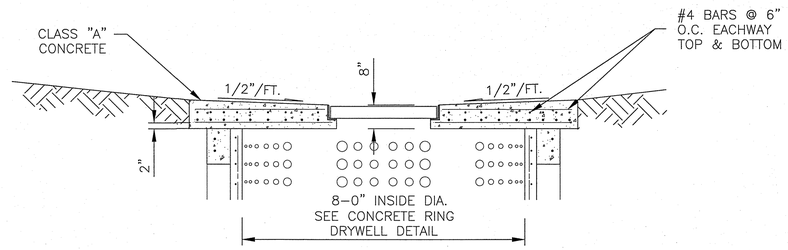

SECTION A–A
NOT TO SCALE

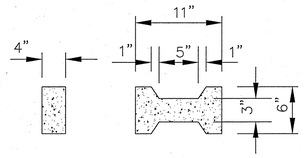

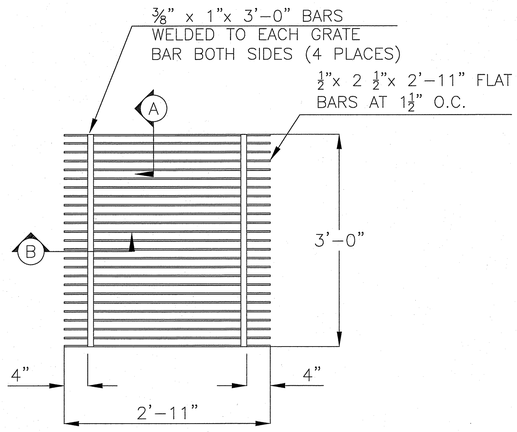

GRATING
NOT TO SCALE

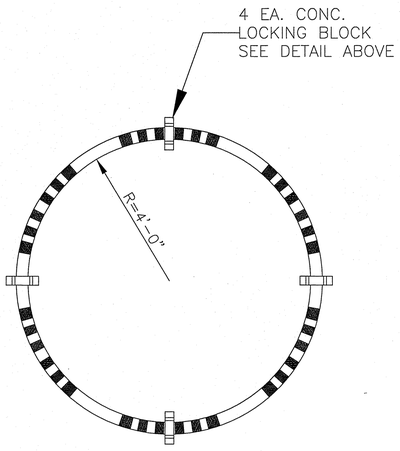

TYPICAL RING CROSS SECTION
NOT TO SCALE

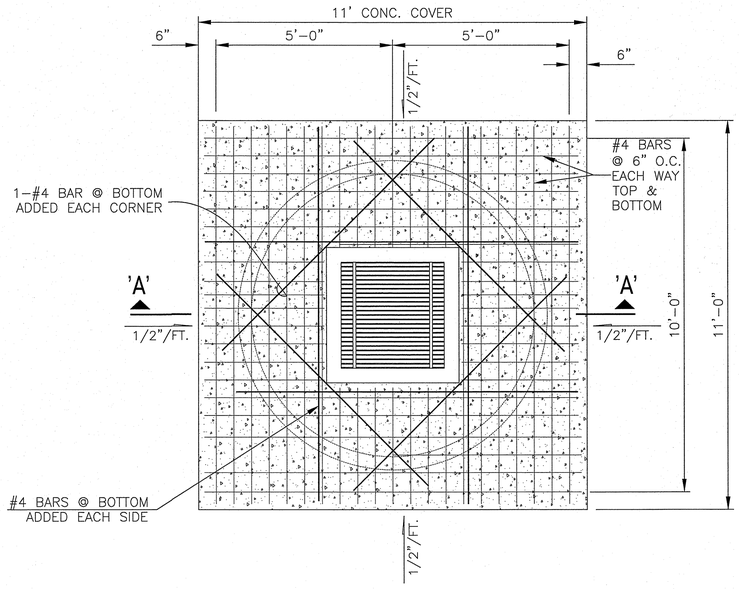

PLAN
NOT TO SCALE

A C-6 DRYWELL GRATE DETAIL
NOT TO SCALE

B C-6 CONCRETE DRYWELL DETAIL
NOT TO SCALE

No.	DATE	REVISIONS	DWG. CHK	DATE	PRINTS TO
1					
2					
3					

This work was prepared by me or under my supervision and construction of this project will be under my observation.
Exp. 04–30–16
Wesley R. Segawa & Associates, Inc.

DENNIS K. W. LEE LICENSED PROFESSIONAL ENGINEER No. 4004–C USA HAWAII

WRSA
Wesley R. Segawa and Associates, Inc.
Committed to Quality Performance & Value
Civil & Structural Engineers
101 Silva Street, Suite 201 Hilo, Hawaii 96720-4755
Telephone: (808) 935-4677 Fax: (808) 935-2070

Project Title: KEAUKAHA TRACT 1 IMPROVEMENTS LOTS 58-B-1 AND 58-B-2

Sheet Title: SHALLOW DRYWELL DETAILS

DESIGN BY:	DRB
DRAWN BY:	DRB
CHECKED BY:	DL
APPROVED BY:	DL
DATE:	2015
SCALE:	AS NOTED
FILE No.	W1302.44

DRAWING No.
C-6

SHEET No.
7
OF 10 SHTS.

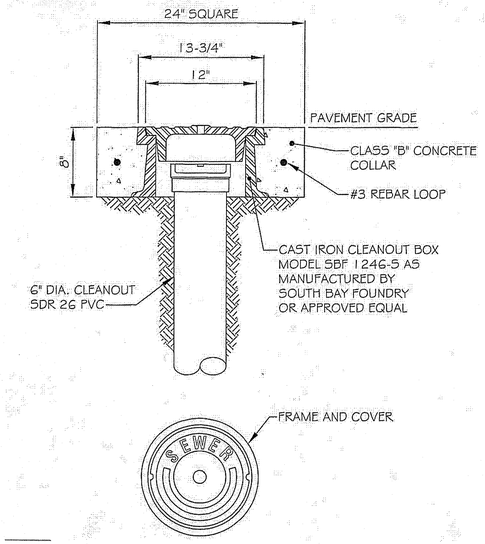

1 / C-7 TYPICAL TRAFFIC RATED FRAME & COVER
(COUNTY OF HAWAII, ENVIRONMENTAL MANAGEMENT, WASTEWATER DIVISION)
NOT TO SCALE

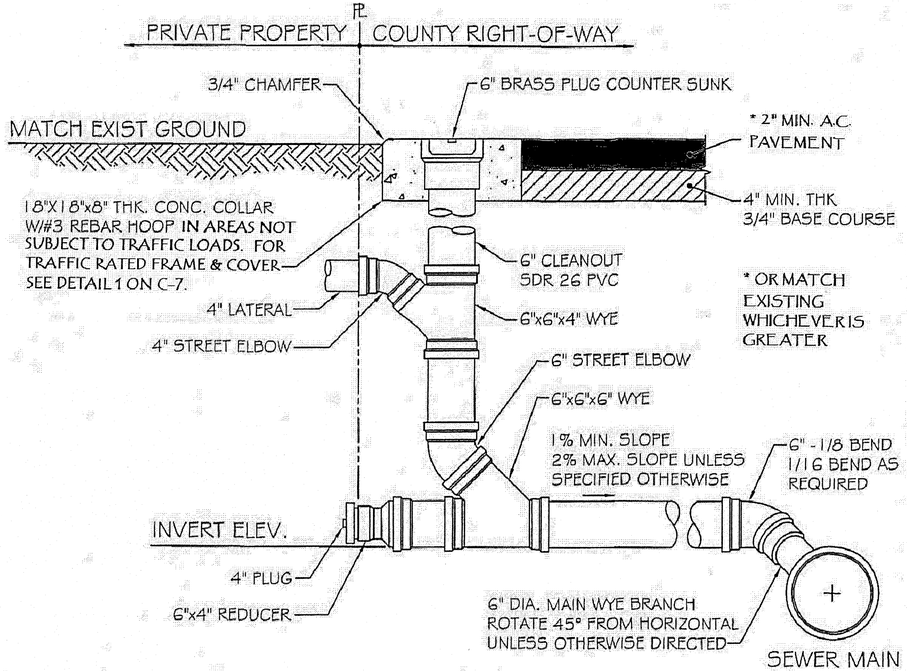

2 / C-7 TYPICAL LATERAL & CLEANOUT DETAIL
(COUNTY OF HAWAII, ENVIRONMENTAL MANAGEMENT, WASTEWATER DIVISION)
NOT TO SCALE

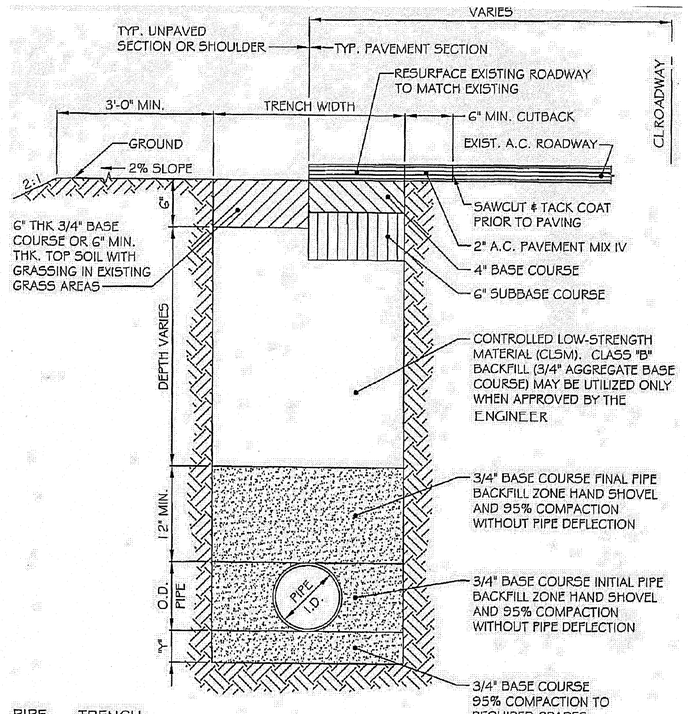

PIPE SIZE	TRENCH WIDTH	"Y"
6"	24"	4"
8"	24"	4"
10"	24"	4"
12"	30"	5"

NOTE: TRENCH RESTORATION WITHIN STATE RIGHT-OF-WAYS SHALL CONFORM TO THE REQUIREMENTS OF THE STATE OF HAWAII DEPARTMENT OF TRANSPORTATION HIGHWAYS DIVISION.

3 / C-7 TYPICAL TRENCH DETAIL
COUNTY ROADS
(COUNTY OF HAWAII, ENVIRONMENTAL MANAGEMENT, WASTEWATER DIVISION)
NOT TO SCALE

DIVISION CHIEF, WASTEWATER DIVISION
DEPARTMENT OF ENVIRONMENTAL MANAGEMENT
COUNTY OF HAWAII

DATE

No.	DATE	DWG. CHK.	REVISIONS
1			
2			
3			

PRINTS TO
DATE

This work was prepared by me or under my supervision and construction of this project is my observation.
Exp. 04-30-16
Wesley R. Segawa & Associates, Inc.
DENNIS K.W. LEE LICENSED PROFESSIONAL ENGINEER No. 4004-C HAWAII USA

WRSA
Wesley R. Segawa and Associates, Inc.
Committed to Quality Performance & Value
Civil & Structural Engineers
101 Silva Street, Suite 201 Hilo, Hawaii 96720-4755
Telephone: (808) 935-4677 Fax: (808) 935-2070

Project Title: KEAUKAHA TRACT 1 IMPROVEMENTS LOTS 58-B-1 AND 58-B-2

Sheet Title: SANITARY SEWER DETAILS

DESIGN BY:	DRB
DRAWN BY:	DRB
CHECKED BY:	DL
APPROVED BY:	DL
DATE:	2015
SCALE:	AS NOTED
FILE No.	W1302.44

DRAWING No. C-7

SHEET No. 8 OF 10 SHTS.

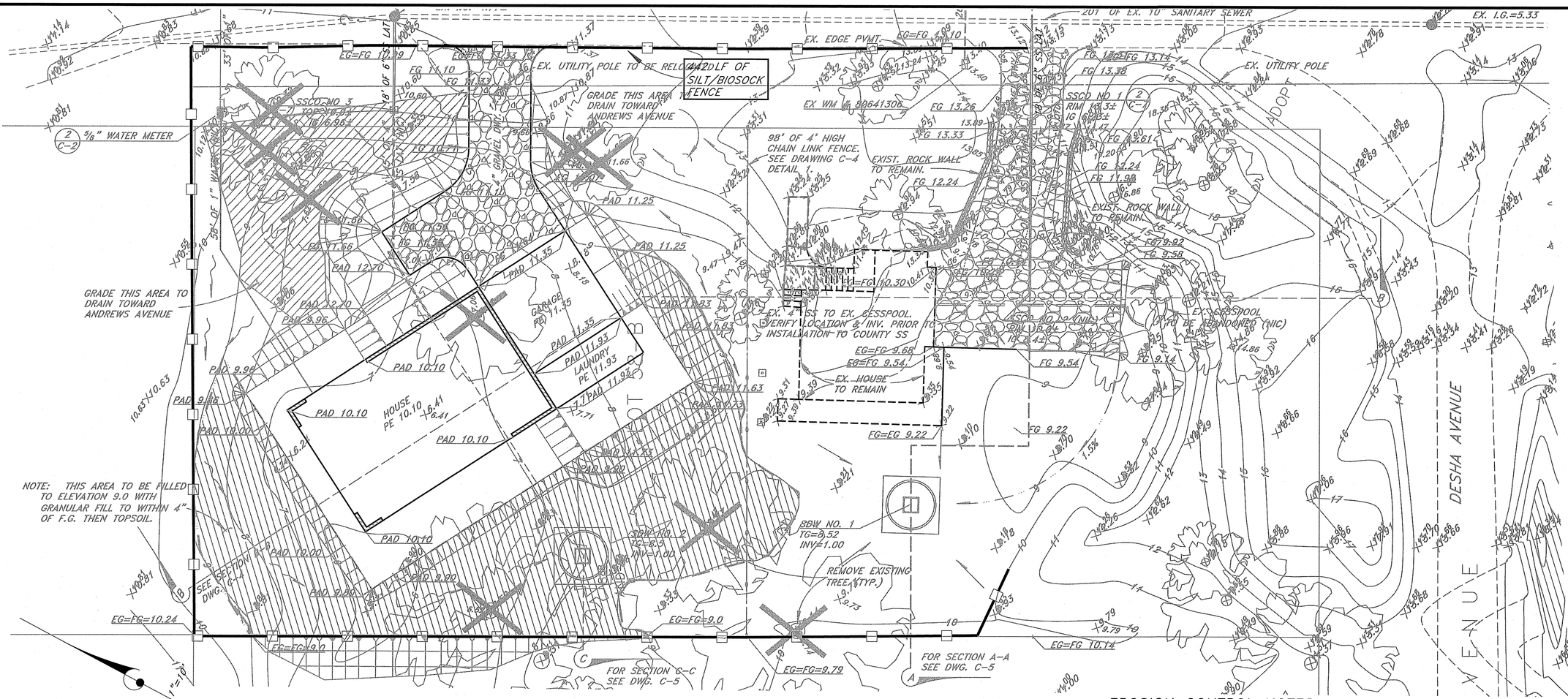

10' 0 10' 20'

GRAPHIC SCALE: 1"=10'

LEGEND:

SILT FENCE/BIOSOCK

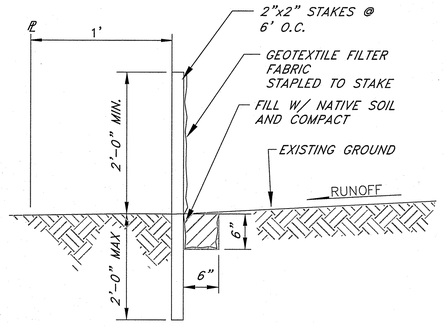

SILT FENCE NOTES:

BIOSOCK MAYBE USED IN LIEU OF SILT FENCE.

THE CONTRACTOR SHALL INSTALL SILT FENCES OR BIO-SOCK PRIOR TO CONSTRUCTION.

ALL BEST MANAGEMENT PRACTICES (BMP'S) SHALL NOT BE REMOVED UNTIL ALL PERMANENT EROSION CONTROL MEASURES ARE IN PLACE AND ESTABLISHED.

AT THE END OF GRADING OPERATIONS, EXISTING CB'S AND DMH'S SURROUNDING THE PROJECT SITE SHALL BE INSPECTED AND ANY ACCUMULATED SEDIMENT AND DEBRIS FOUND IN THE DRAIN STRUCTURES SHALL BE REMOVED. FLUSHING INTO THE CB'S AND DMH'S ARE PROHIBITED.

SILT FENCE DETAIL

NO SCALE

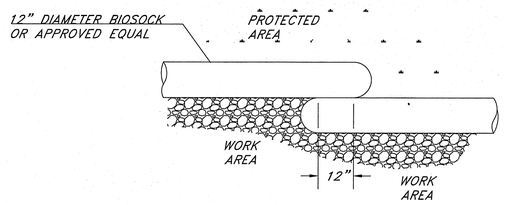

PLAN VIEW

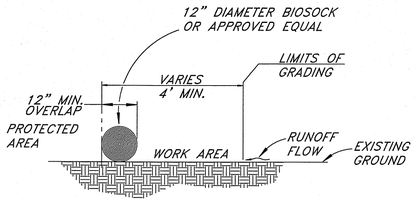

ELEVATION VIEW

BIOSOCK DETAIL (12" DIA)

NOT TO SCALE

EROSION CONTROL NOTES:

1. THE CONTRACTOR SHALL REFER TO THE RULES RELATING TO SOILS EROSION STANDARDS AND GUIDELINES, APRIL 1999, BY THE CITY AND COUNTY OF HONOLULU DEPARTMENT OF PLANNING AND PERMITTING FOR BEST MANAGEMENT PRACTICES.
2. THE CONTRACTOR SHALL STABILIZE THE CONSTRUCTION SITE AT ALL POINTS OF EGRESS AND INGRESS WITH A 12' WIDE X 20' LONG X 8" DEEP SECTION OF NO. 2 CRUSHED ROCK.
3. STOCKPILES SHALL NOT BE LOCATED IN DRAINAGE WAYS OR OTHER AREAS OF CONCENTRATED FLOWS. SEDIMENT TRAPPING DEVICES SUCH AS FENCES, TRAPS, BASINS OR BARRIERS SHALL BE USED AROUND THE BASE OF ALL STOCKPILES.
4. DUST CONTROL SHOULD BE APPLIED TO REDUCE DUST EMISSIONS. THE CONTRACTOR, AT THEIR OWN EXPENSE, SHALL KEEP THE PROJECT AREA AND SURROUNDING AREA FREE FROM DUST NUISANCE. THE WORK SHALL BE IN CONFORMANCE WITH THE AIR POLLUTION CONTROL STANDARDS CONTAINED IN HAWAII ADMINISTRATIVE RULES: CHAPTER 11-60, "AIR POLLUTION CONTROL".
5. SURFACE FLOW FROM ABOVE AN EXPOSED SLOPE SHALL NOT BE ALLOWED TO FLOW OVER THE SLOPE WITHOUT PROTECTION. SLOPE PROTECTION SHALL BE USED ON AREAS WITH SLOPES GREATER THAN 50% AND ON AREAS OF MODERATE SLOPES THAT ARE PRIME TO EROSION.
6. ALL STORM DRAIN INLETS ON SITE, AND THOSE OFFSITE WHICH MAY RECEIVE RUNOFF FROM THE SITE SHALL USE AN INLET PROTECTION DEVICE.
7. TEMPORARY STABILIZATION IS NOT REQUIRED WHEN THE DISTURBED AREA WILL BE WORKED WITHIN A 14 DAY PERIOD. STABILIZATION IS REQUIRED FOR DISTURBED AREAS AT FINAL GRADE AND FOR THOSE AREAS THAT WILL NOT BE WORKED WITHIN A 14 DAY PERIOD.
8. ALL DISTURBED AREAS SHALL BE PERMANENTLY STABILIZED PRIOR TO REMOVING EROSION AND SEDIMENT MEASURES. ALL TEMPORARY EROSION AND SEDIMENT CONTROL MEASURES SHALL BE REMOVED WITHIN 30 DAYS AFTER FINAL SITE STABILIZATION OR AFTER THE TEMPORARY MEASURES ARE NO LONGER NEEDED. TRAPPED SEDIMENT AND AREAS OF DISTURBED SOIL WHICH RESULT FROM THE REMOVAL OF THE TEMPORARY MEASURES SHALL BE IMMEDIATELY PERMANENTLY STABILIZED.

No.	DATE	DWG. CHK.	REVISIONS
			PRINTS TO
			DATE

This work was prepared by me or under my supervision and construction of this project will be under my observation. Exp. 04-30-16

LEE K. W. ONNIS LICENSED PROFESSIONAL ENGINEER No. 4004-C USA HAWAII

Wesley R. Segawa & Associates, Inc.

WRSA
Wesley R. Segawa and Associates, Inc.
Committed to Quality Performance & Value
Civil & Structural Engineers
101 Silva Street, Suite 201 Hilo, Hawaii 96720-4755
Telephone: (808) 935-4677 Fax: (808) 935-2070

Project Title: KEAUKAHA TRACT 1 IMPROVEMENTS LOTS 58-B-1 AND 58-B-2

Sheet Title: EROSION CONTROL (BMP) PLAN

DESIGN BY:	DRB
DRAWN BY:	DRB
CHECKED BY:	DL
APPROVED BY:	DL
DATE:	2015
SCALE:	AS NOTED
FILE No.	W1302.44

DRAWING No. C-8

SHEET No. 9 OF 10 SHTS.

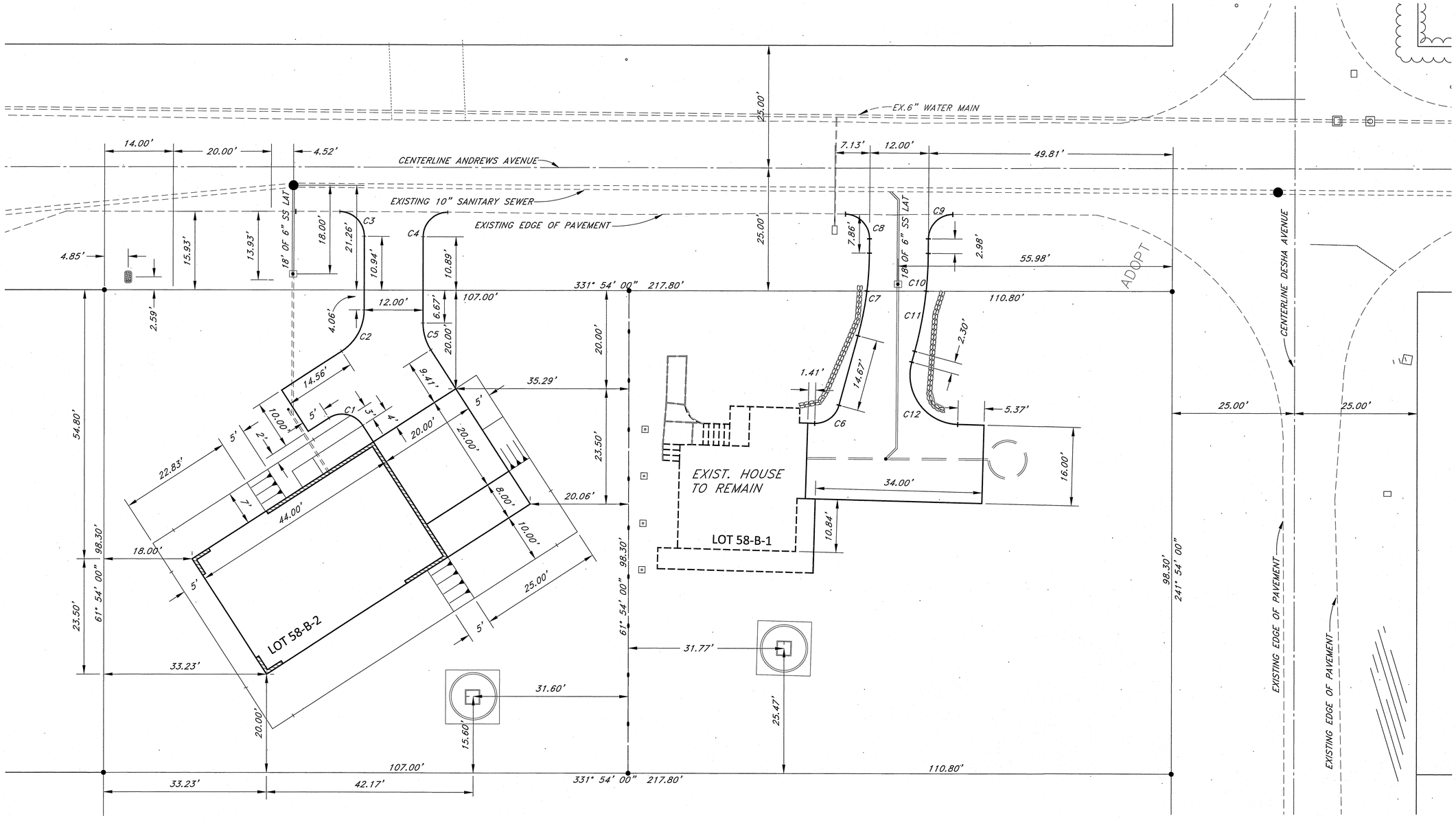

DIMENSION PLAN

SCALE : 1"=10'

10' 0 10' 20'
GRAPHIC SCALE: 1"=10'

Curve Table					
Curve #	Length	Radius	Delta	Chord Direction	Chord Length
C1	7.85	5.00	90.00	N16° 02' 27"W	7.07
C2	9.96	10.00	57.06	S89° 34' 14"E	9.55
C3	7.84	5.00	89.87	N16° 57' 54"E	7.06
C4	7.87	5.00	90.13	N73° 02' 06"W	7.08
C5	5.75	10.00	32.94	S45° 25' 46"W	5.67
C6	6.65	5.00	76.23	S64° 43' 48"E	6.17

Curve Table					
Curve #	Length	Radius	Delta	Chord Direction	Chord Length
C7	17.04	65.00	15.02	N69° 38' 43"E	16.99
C8	7.80	5.00	89.36	N17° 27' 27"E	7.03
C9	7.81	5.00	89.52	N73° 06' 10"W	7.04
C10	7.69	77.00	5.73	N64° 59' 59"E	7.69
C11	12.49	77.00	9.29	N72° 30' 28"E	12.47
C12	18.11	10.00	103.77	S25° 16' 12"W	15.74

No.	DATE	DWG. CHK.	REVISIONS

PRINTS TO

DATE

This work was prepared by me or under my supervision and construction of this project will be under my observation. Page 1 of 1 pg

Wesley R. Segawa & Associates, Inc.

LICENSED PROFESSIONAL ENGINEER
K. W. LEE OGINNIS
No. 4004-C
U.S.A. HAWAII

WRSA
Wesley R. Segawa and Associates, Inc.
Committed to Quality Performance & Value
Civil & Structural Engineers
101 Silva Street, Suite 201 Hilo, Hawaii 96720-4755
Telephone: (808) 935-4677 Fax: (808) 935-2070

Project Title: KEAUKAHA TRACT 1 IMPROVEMENTS

Sheet Title: LOTS 58-B-1 AND 58-B-2 DIMENSION PLAN

DESIGN BY:	DRB
DRAWN BY:	DRB
CHECKED BY:	DL
APPROVED BY:	DL
DATE:	2015
SCALE:	AS NOTED
FILE No.	W1302.44

DRAWING No. C-9

SHEET No. 10 OF 10 SHTS.

STATE OF HAWAII
DEPARTMENT OF HAWAIIAN HOME LANDS

KEAUKAHA TRACT 1 IMPROVEMENTS

LOT 59-B-1 and LOT 59-B-2

WAIAKEA, SOUTH HILO, HAWAII
TAX MAP KEY: (3) 2 - 1 - 021: 029
IFB-16-HHL-014
SUBDIVISION APPLICATION NO: SUB-15-001464

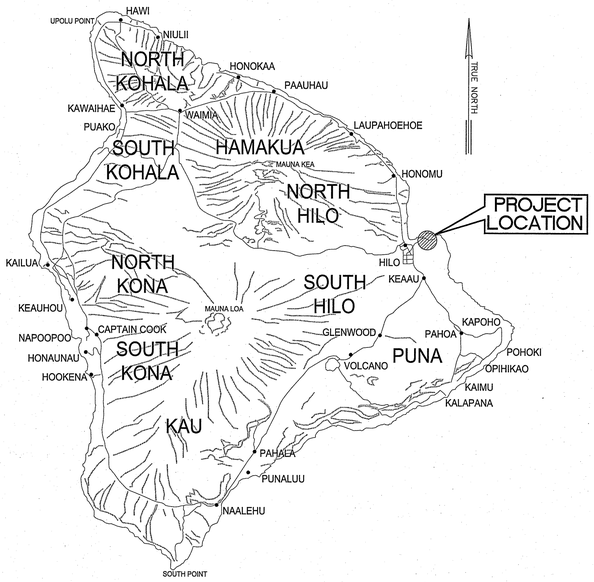

ISLAND OF HAWAII
NOT TO SCALE

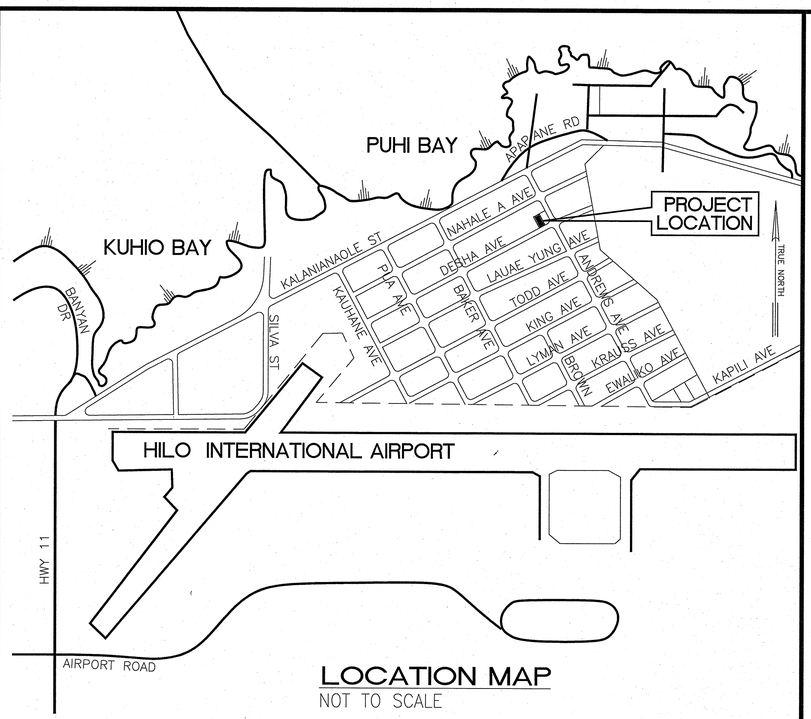

LOCATION MAP
NOT TO SCALE

I N D E X

SHEET NO.	DESCRIPTION	DRAWING NO.
1	TITLE SHEET	T-1
2	MISCELLANEOUS NOTES	C-1
3	UTILITY POLE NOTES AND SPECIFICATIONS	C-2
4	WATER NOTES & DETAILS	C-3
5	GRADING AND DRAINAGE PLAN	C-4
6	UTILITY PLAN	C-5
7	SHALLOW DRYWELL DETAILS	C-6
8	EROSION CONTROL (BMP) PLAN	C-7
9	DIMENSION PLAN	C-8

APPROVED BY:

CHAIRMAN, HAWAIIAN HOMES COMMISSION STATE OF HAWAII	DATE: 1/26/16
MANAGER, CHIEF-ENGINEER, DEPARTMENT OF WATER SUPPLY COUNTY OF HAWAII	DATE:
DIRECTOR, DEPARTMENT OF ENVIRONMENTAL MANAGEMENT COUNTY OF HAWAII	DATE:
DIRECTOR, PLANNING DEPARTMENT COUNTY OF HAWAII FOR GRADING PURPOSES ONLY;	DATE:
DIRECTOR, DEPARTMENT OF PUBLIC WORKS COUNTY OF HAWAII	DATE:

No.	DATE	DWG.	CHK.	REVISIONS
1				
2				
3				

PRINTS TO
DATE

This work was prepared by me or under my supervision and construction of this project will be under my observation.
Exp. 04-30-16
Wesley R. Segawa & Associates, Inc.

DENNIS K. W. LEE LICENSED PROFESSIONAL ENGINEER No. 4004-C HAWAII U.S.A.

WRSA
Wesley R. Segawa and Associates, Inc.
Committed to Quality Performance & Value
Civil & Structural Engineers
101 Sitva Street, Suite 201 Hilo, Hawaii 96720-4755
Telephone: (808) 935-4677 Fax: (808) 935-2070

Project Title: KEAUKAHA TRACT 1 IMPROVEMENTS LOTS 59-B-1 AND 59-B-2
Sheet Title: TITLE SHEET

DESIGN BY:	DRB
DRAWN BY:	DRB
CHECKED BY:	DL
APPROVED BY:	DL
DATE:	X
SCALE:	AS NOTED
FILE No.	W1302.44

DRAWING No. T-1

SHEET No. 1 OF 9 SHTS.

GRADING NOTES:

1. ALL GRADING WORK SHALL CONFORM TO CHAPTER 10 OF THE HAWAII COUNTY CODE. SHOULD A GRADING PERMIT BE REQUIRED, NO WORK SHALL COMMENCE UNTIL THE DEPARTMENT OF PUBLIC WORKS (DPW) APPROVES A GRADING PERMIT.

2. THE CONTRACTOR SHALL REMOVE ALL SILT AND DEBRIS DEPOSITED IN DRAINAGE FACILITIES, ROADWAYS AND OTHER AREAS RESULTING FROM HIS WORK. THE COSTS INCURRED FOR ANY NECESSARY REMEDIAL ACTION BY THE DPW, SHALL BE PAYABLE BY THE CONTRACTOR.

3. THE CONTRACTOR, AT HIS OWN EXPENSE, SHALL KEEP THE PROJECT AND SURROUNDING AREAS FREE FROM DUST NUISANCES. THE WORK SHALL BE IN CONFORMANCE WITH THE AIR POLLUTION CONTROL RULES OF THE STATE DEPARTMENT OF HEALTH, HAR 11-60.1, and FUGITIVE DUST.

4. ALL GRADING OPERATIONS SHALL BE PERFORMED IN CONFORMANCE WITH THE APPLICABLE PROVISIONS OF THE HAWAII ADMINISTRATIVE RULES, TITLE 11, CHAPTER 55, WATER POLLUTION CONTROL AND CHAPTER 54, WATER QUALITY STANDARDS, AND TO THE EROSION AND SEDIMENTATION CONTROL STANDARDS AND GUIDELINES OF THE DEPARTMENT OF PUBLIC WORKS, COUNTY OF HAWAII.

5. THE CONTRACTOR SHALL SOD OR PLANT ALL SLOPES AND EXPOSED AREAS IMMEDIATELY AFTER THE GRADING WORK HAS BEEN COMPLETED.

6. FILLS ON SLOPES STEEPER THAN 5:1 SHALL BE KEYED.

7. THE CONTRACTOR SHALL INFORM THE DPW OF THE LOCATION OF THE DISPOSAL AND/OR BORROW SITE(S) REQUIRED FOR THIS PROJECT WHEN AN APPLICATION FOR A GRADING PERMIT IS MADE. THE DISPOSAL AND/OR BORROW SITE(S) MUST ALSO FULFILL THE REQUIREMENTS OF THE GRADING ORDINANCE.

8. NO GRADING WORK SHALL BE DONE ON SATURDAYS, SUNDAYS, AND HOLIDAYS ANYTIME WITHOUT PRIOR APPROVAL FROM THE ENGINEER. GRADING WORK ON NORMAL WORKING DAYS SHALL BETWEEN THE HOURS OF 7:00 A.M. TO 3:00 P.M.

9. FILLS SHALL BE COMPACTED TO 90 PERCENT (90%) OF MAXIMUM DENSITY PER ASTM D-1557 TEST.

10. THE CONTRACTOR SHALL REMOVE ALL VEGETATION BEFORE PLACING FILLS ON NATURAL GROUND SURFACE.

    ESTIMATED EARTHWORK QUANTITIES:

    TOTAL EXCAVATION: 0 CU. YDS.
    TOTAL EMBANKMENT: 842 CU. YDS.

11. THE QUANTITIES SHOWN ARE FOR GRADING PERMIT PURPOSES ONLY. THE CONTRACTOR SHALL BE RESPONSIBLE FOR DETERMINING THE EXACT QUANTITIES FOR BIDDING PURPOSES.

EARTHWORK QUANTITIES SHOWN WERE TAKEN FROM EXISTING GROUND TO FINISH GRADE.

TOTAL AREA TO BE GRADED 0.22 ACRES

SOLID WASTE CONSTRUCTION NOTES:

1. UNLESS OTHERWISE SPECIFIED, THE CONTRACTOR IS RESPONSIBLE FOR THE PROPER HANDLING, STORAGE AND/OR DISPOSAL OF ALL WASTE GENERATED BY THIS CONSTRUCTION INCLUDING GRUBBING AND EXCESS EXCAVATED MATERIAL. ANY MATERIAL BROUGHT TO THE COUNTY LANDFILLS WILL BE SUBJECTED TO THE INSTITUTED TIPPING FEE SYSTEM, WITH NO EXCEPTIONS OR EXEMPTIONS

2. ALL WASTES GENERATED BY CONSTRUCTION, INCLUDING GRUBBING, DEMOLITION AND EXCESS EXCAVATION MATERIAL MAY BE BROUGHT TO THE WEST HAWAII OR THE HILO LANDFILL. THE CONTRACTOR SHALL CHECK WITH THE SOLID WASTE DIVISION FOR DISCLOSURE OF THE CURRENT LANDFILL FEE AND CONSIDERATION OF THAT FEE SHALL BE INCLUDED IN THE CONTRACTOR'S BID SUM.

3. CONSTRUCTION, DEMOLITION AND GRUBBING MATERIAL SHALL NOT BE DEPOSITED AT ANY OF THE COUNTY TRANSFER STATIONS, BUT SHALL BE TRANSPORTED FOR DISPOSAL AT EITHER THE WEST HAWAII OR HILO LANDFILL.

4. ASBESTOS MATERIAL MUST BE SEPARATED, DOUBLE BAGGED AND LANDFILLED IN ACCORDANCE WITH REGULATIONS OF THE SOLID WASTE DIVISION, DEPARTMENT OF ENVIRONMENTAL MANAGEMENT. INFORMATION MAY BE OBTAINED BY CALLING THE DIVISION AT (808) 961-8339 BETWEEN 7:00 AM AND 4:00 PM MONDAY THROUGH FRIDAY.

5. ALL GREEN WASTE GENERATED FROM GRUBBING WORK, SHALL BE SEPARATED AND DEPOSITED AT THE GREEN WASTE AREA AT THE HILO OR WEST HAWAII DISPOSAL SITE. (NOTE: NO TREATED LUMBER IS ALLOWED IN THE GREEN WASTE)

6. RECYCLE AS MUCH OF THE SOLID WASTE MATERIAL GENERATED BY THIS CONSTRUCTION AS POSSIBLE. EXCESS MATERIAL SHALL BE DISPOSED OF PROPERLY.

7. CONTRACTOR SHALL SUBMIT A REPORT PRIOR TO THE COMMENCEMENT OF WORK, PER SOLID WASTE DEMOLITION PLAN GUIDELINES, AS AMMENDED. AVAILABLE AT THE COUNTY OF HAWAII, DEPARTMENT OF ENVIRONMENTAL MANAGEMENT OFFICE.

NOTES FOR WORK WITHIN THE ROAD-OF-WAY

1. THE CONTRACTOR SHALL VERIFY THE LOCATION OF ALL EXISTING UTILITIES, WHETHER SHOWN ON THE PLAN OR NOT, AND SHALL BE RESPONSIBLE FOR THE REPAIR OR REPLACEMENT OF SAME IN THE EVENT OF DAMAGES DUE TO HIS CONSTRUCTION PARACTICES. THE CONTRACTOR SHALL COORDINATE HIS WORK WITH THE RESPECTIVE UTILITY COMPANIES.

2. THE CONTRACTOR SHALL PROVIDE AND INSTALL ALL TRAFFIC CONTROL DEVICES IN CONFORMANCE WITH THE CURRENT EDITION OF THE "MANUAL ON UNIFORM TRAFFIC CONTROL DEVICES FOR STREETS AND HIGHWAYS," AND AS DIRECTED BY THE ENGINEER.

3. THE PROPOSED UTILITY LINE LOCATION SHALL BE LAID OUT IN THE FIELD PRIOR TO THE CONDUCTING OF THE FIELD REVIEW BY THE ENGINEER.

4. FIELD ADJUSTMENTS SHALL BE MADE AS DIRECTED BY THE ENGINEER PRIOR TO THE COMMENCEMENT OF ANY UTILITY LINE WORK.

5. THE CONTRACTOR SHALL PROVIDE AT LEASE ONE (1) LANE FOR TRAFFIC MOVEMENT AT ALL TIMES. TWO (2) LANES FOR TRAFFIC MOVEMENT SHALL BE PROVIDED BETWEEN THE HOURS OF 3:00 P.M. TO 8:00 A.M.

6. THE EXISTING PAVEMENT SHALL BE SAW-CUT BEFORE COMMENCEMENT OF TRENCHING WORK.

7. ANY PAVEMENT OUTSIDE THE CONTRACT ZONE LIMITS DAMAGED AS A RESULT OF CONSTRUCTION OPERATIONS SHALL BE RESTORED TO ITS ORIGINAL CONDITION, OR BETTER, AS DIRECTED BY THE ENGINEER.

8. A TEMPORARY COLD MIX PATCH SHALL BE APPLIED IMMEDIATELY UPON COMPLETION OF THE BACKFILLING OPERATION AND SHALL BE MAINTAINED BY THE CONTRACTOR UNTIL A PERMANENT PATCH IS AUTHORIZED BY THE ENGINEER.

9. NO MATERIAL, EXCEPT THE TRENCH EXCAVATED MATERIAL, SHALL BE STOCKPILED CLOSER THAN SIX (6) FEET FROM THE EXISTING EDGE OF PAVEMENT.

10. NO CONSTRUCTION EQUIPMENT SHALL BE PARKED WITHIN THE ROAD RIGHT-OF-WAY IN SUCH A MANNER THAT THE EQUIPMENT WILL OBSTRUCT THE NORMAL MOVEMENT AND SIGHT DISTANCE OF THE DRIVING MOTORIST, EXCEPT DURING ACTUAL WORKING HOURS.

11. EXCEPT DURING ACTUAL WORKING HOURS, ALL SIGNS THAT DO NOT PERTAIN TO THE CONSTRUCTION ACTIVITY, SUCH AS "MEN WORKING" AND "FLAGMAN AHEAD" SHALL BE COVERED OR LAID DOWN. HOWEVER, ALL SIGNS NECESSARY FOR THE SAFETY OF THE PUBLIC SHALL BE MAINTAINED.

12. ANY PAVEMENT MARKINGS, STRUCTURES, AND APPURTENANCES (WITHIN OR OUTSIDE OF THE CONTRACT ZONE LIMITS) DAMAGED AND/OR WORN AWAY UNDER THE PERMIT SHALL BE REPAINTED OR RECONSTRUCTED AS DIRECTED BY THE ENGINEER.

13. NO TRENCHING SHALL BE LEFT OPEN FOR MORE THAN FIVE (5) WORKING DAYS.

14. SHOULD TRENCING OCCUR THROUGH AN EXISTING SIDEWALK, OR SHOULD DAMAGES OCCUR TO THE SIDEWALK AS A RESULT OF ANY CONSTRUCTION WORK, THE FOLLOWING PROCEDURE SHALL BE UTILIZED TO REPAIR THE SIDEWALK:

    A. ALL PORTLAND CEMENT CONCRETE TO BE REMOVED SHALL FIRST BE CUT WITH A CONCRETE SAW THAT HAS A DIAMOND OR CARBORUNDUM ABRASIVE WHEEL. THOSE CUTS SHALL BE MADE TO A DEPTH EQUAL TO AT LEAST ONE-FOURTH OF THE DEPTH OF THE SLAB, OR ENOUGH AS IS DEEMED NECESSARY BY THE DEPARTMENT OF PUBLIC WORKS, TO PERMIT BREAKING OUT THE BALANCE OF THE CONCRETE WITHOUT SPALLING OFF THE EXPOSED EDGES OF THE SLAB LEFT IN PLACE.

    B. IF ANY CONCRETE BLOCK IS TOUCHED, THE WHOLE BLOCK SHALL BE REMOVED AND LATER REPLACED, UNLESS A MINOR VARIATION IS AUTHORIZED BY THE DPW OR IT'S REPRESENTATIVE.

    C. ANY DAMAGES TO ADJACENT AREAS DUE TO SETTLEMENT OR TO ANY OTHER EFFECTS WHATSOEVER CAUSED BY THE CONSTRUCTION WORK SHALL BE PROPERLY REPAIRED AND CORRECTED.

STRUCTURAL BEST MANAGEMENT PRACTICES (BMPS):

1. THE CONTRACTOR SHALL INSPECT EROSION AND SEDIMENT CONTROL MEASURES WEEKLY AND AFTER 0.5 INCHES OF RAINFALL.

2. IF REPAIRS TO OR MAINTENANCE OF THE CONTRACTOR'S EROSION CONTROL MEASURES ARE NECESSARY, THE CONTRACTOR SHALL INITIATE THE REPAIRS OR MAINTENANCE WITHIN TWENTY-FOUR (24) HOURS AFTER INSPECTION AND NOTING OF THE DEFICIENCY.

    REPAIRS AND MAINTENANCE MAY INCLUDE THE FOLLOWING:

    A. REPLACING GEO-JUTE FABRIC WHEN TEARS ARE FOUND, AND ENSURING THAT THE FABRIC IS SECURELY ATTACHED FIRMLY IN THE GROUND.

    B. RESTORING BARE SPOTS AND WASHOUTS, AND ENSURING HEALTY PLANT GROWTH IN BOTH TEMPORARY AND PERMANENT SEEDED AND PLANTED AREAS.

3. THE CONTRACTOR SHALL MAKE EVERY EFFORT TO INSTALL STRUCTURAL BMPS AS NEAR TO THE POLLUTANT SOURCE AS PRACTICABLE. INLET PROTECTION SHALL SERVE AS THE LAST MEASURE TO PREVENT POLLUTANTS FROM ENTERING THE STORM DRAIN SYSTEM.

4. THE CONTRACTOR SHALL BACKFILL TRENCHES AND PROVIDE COLD MIX PATCHES TO MATCH ADJOINING PAVEMENT GRADE AT THE END OF EACH WORK DAY.

5. STABILIZED CONSTRUCTION ENTRANCE:

    ALL POINTS OF EGRESS AND INGRESS TO A SITE SHALL BE PROTECTED WITH A STABILIZED CONSTRUCTION ENTRANCE, 20' X 20' X 8" THICK CRUSHED ROCK LAYER OVER A GEOTEXTILE FABRIC BASE IN THE LOCATION(S) SHOWN ON THE EROSION CONTROL PLAN.

6. DUST CONTROL:

    DUST CONTROL, INCLUDING DUST BARRIERS, WATERING, ETC., SHOULD BE APPLIED TO REDUCE DUST EMISSIONS. THE CONTRACTOR, AT HIS OWN EXPENSE, SHALL KEEP THE PROJECT AREA AND SURROUNDING AREA FREE FROM DUST NUISANCE. THE WORK SHALL BE IN CONFORMANCE WITH THE AIR POLLUTION CONTROL STANDARDS CONTAINED IN HAWAII ADMINISTRATIVE RULES: CHAPTER 11-60, "AIR POLLUTION CONTROL",

7. SEDIMENT BARRIERS OR TRAPS:

    SEDIMENT TRAPPING DEVICES SUCH AS FENCES, TRAPS, BASINS OR BARRIERS SHALL BE USED DOWN SLOPE OF ALL DISTURBED AREAS AND AROUND THE BASE OF ALL MATERIAL STOCKPILES.

8. INLET PROTECTION:

    ALL STORM DRAIN INLETS ON SITE, AND THOSE OFFSITE WHICH MAY RECEIVE RUNOFF FROM THE SITE SHALL USE AN INLET PROTECTION DEVICE.

9. PERMANENT STABILIZATION:

    ALL DISTURBED AREAS SHALL BE PERMANENTLY STABILIZED PRIOR TO REMOVING EROSION AND SEDIMENT MEASURES. ALL TEMPORARY EROSION AND SEDIMENT CONTROL MEASURES SHALL BE REMOVED WITHIN 30 DAYS AFTER FINAL SITE STABILIZATION OR AFTER THE TEMPORARY MEASURES ARE NO LONGER NEEDED. TRAPPED SEDIMENT AND AREAS OF DISTURBED SOIL WHICH RESULT FROM THE REMOVAL OF THE TEMPORARY MEASURES SHALL BE IMMEDIATELY PERMANENTLY STABILIZED.

LEGEND:

A.C.	ASPHALT CONCRETE
ARV	AIR RELEASE VALVE
BOT.	BOTTOM
BW	BOTTOM WALL
C.O.	CLEAN OUT
COCN.	CONCRETE
CRM	CONCRETE RUBBLE MASONARY
D	DIAMETER OR DRAIN
E/ELEC.	ELECTRIC
ELEV./E	ELEVATION
FFE	FINISH FLOOR ELEVATION
F.H.	FIRE HYDRANT
G.P.	GUARD POST/GUY POLE/GATE POST
H	HEIGHT
IG	INVERT GRADE
INV.	INVERT
M.B.	MAIL BOX
MH	MANHOLE
MON	MONUMENT
NIC	NOT IN CONTRACT
OH	OVERHEAD
PAV'T	PAVEMENT
PE	PAD ELEVATION
S	SEWER OR SPREAD
SDMH	STORM DRAIN MANHOLE
SMH	SEWER MANHOLE
SS	SANITARY SEWER
ST.	STREET
STA.	STATION
TB	TOP OF BOX
TG	TOP OF GRATE
TP	TOP PIPE
TS	TOP STEM
TV	TOP VALVE
TW	TOP WALL
U.P.	UTILITY POLE
U.P./S.L.	UTILITY POLE W/STREET LIGHT
W	WATER
WM	WATER METER
WMH	WATER MANHOLE
WV	WATER VALVE BOX

No.	DATE	DWG.	CHK.	REVISIONS
1				
2				
3				

PRINTS TO DATE

This work was prepared by me or under my supervision and construction of this project will be under my observation. Exp. 04-30-16

Wesley R. Segawa & Associates, Inc.

DENNIS K.W. LEE — LICENSED PROFESSIONAL ENGINEER — No. 4004-C — HAWAII, USA

Wesley R. Segawa and Associates, Inc.
Committed to Quality Performance & Value
Civil & Structural Engineers
101 Silva Street, Suite 201 Hilo, Hawaii 96720-4755
Telephone: (808) 935-4677 Fax: (808) 935-2070

Project Title: KEAUKAHA TRACT 1 IMPROVEMENTS LOTS 59-B-1 AND 59-B-2

Sheet Title: MISCELLANEOUS NOTES

DESIGN BY:	DRB
DRAWN BY:	DRB
CHECKED BY:	DL
APPROVED BY:	DL
DATE:	X
SCALE:	AS NOTED
FILE No.	W1302.44

DRAWING No. C-1

SHEET No. 2 OF 9 SHTS.

UTILITY POLE SPECIFICATIONS AND NOTES:

MAXIMUM-200 AMP SERVICE

IT SHALL BE THE CUSTOMER'S RESPONSIBILITY FOR COMPLIANCE WITH THE NATIONAL ELECTRICAL CODE AND ANY GOVERNING AUTHORITY FOR ALL EQUIPMENT BEYOND THE POINT OF CONNECTION. THE CUSTOMER IS ADVISED TO USE THE SERVICES OF A QUALIFIED ELECTRICIAN TO ASSURE COMPLIANCE WITH ALL CODES AND REGULATIONS.

1. DESCRIPTION:

   PERMANENT - MOBILE HOMES, CAMPS, WATER WELLS, AND ANY OTHER CONNECTION NOT CONSIDERED TEMPORARY.

   TEMPORARY - CONSTRUCTION, SPECIAL EVENTS, ETC.

2. METER POLES ARE FURNISHED AND INSTALLED BY CUSTOMER. SPECIFICATIONS SHOWN ON THE DRAWING AND DESCRIBED HERE SHALL BE CONSIDERED MINIMUM REQUIREMENTS.

3. PERMANENT METER POLES MUST BE 20' (FEET) IN LENGTH AND BE SET 5' (FEET) DEEP. A PERMANENT METER POLE MUST BE A TREATED ROUND POLE WITH A MINIMUM TOP DIAMETER OF 5" (INCHES) OR A TREATED 6" X 6" (INCH) POLE.

   IT WILL BE THE RESPONSIBILITY OF THE CUSTOMER TO SECURE THE POLE IN A VERTICAL POSITION. IF THE GROUND IS NOT ADEQUATE TO SUPPORT THE POLE, A GUY WILL HAVE TO BE INSTALLED BY THE CUSTOMER.

4. TEMPORARY METER POLES MUST BE 16' (FEET) IN LENGTH AND BE SET 4' (FEET) DEEP. A TEMPORARY METER POLE MUST BE A TREATED POLE WITH A MINIMUM SIZE OF 4" X 6" (INCHES). A TEMPORARY METER POLE WITH A SERVICE LENGTH OF 75' (FEET) OR GREATER MUST BE BRACED AS SHOWN ON THE TEMPORARY METER POLE DRAWING.

5. SERVICE ENTRANCE CONDUIT FURNISHED AND INSTALLED BY CUSTOMER. SERVICE ENTRANCE CONDUIT SHALL BE SCHEDULE 40 PVC OR RIGID CONDUIT, NO EMT, AND SHALL BE SIZED IN ACCORDANCE WITH THE NATIONAL ELECTRICAL CODE OR GOVERNING AUTHORITY. A MINIMUM OF 3 CONDUIT STRAPS ARE REQUIRED, WITH ONE (1) STRAP BEING NO MORE THAN 12" (INCHES) FROM THE WEATHER HEAD.

6. SERVICE ENTRANCE CONDUCTORS FROM THE POINT OF CONNECTION TO METER BASE, TO THE MAIN DISCONNECT, FURNISHED AND INSTALLED BY CUSTOMER.

   SERVICE ENTRANCE CONDUCTORS SHALL BE COPPER ONLY AND SIZED ACCORDING TO LOAD, AS REQUIRED BY THE NATIONAL ELECTRIC CODE OR GOVERNING AUTHORITY.

   THE NEUTRAL OF THE SERVICE ENTRANCE CONDUCTORS CAN BE TWO (2) SIZES SMALLER THAN THE OTHER CONDUCTORS AND SHALL BE IDENTIFIED WITH GRAY AND WHITE TAPE AT THE WEATHER HEAD AND IN THE METER BASE. AN EXTENSION OF 18" (INCHES) OF SERVICE CONDUCTOR IS REQUIRED AT THE WEATHER HEAD.

7. MAIN DISCONNECT, EITHER A SINGLE MAIN OR A MAIN IN A DISTRIBUTION PANEL, FURNISHED AND INSTALLED BY CUSTOMER. MAIN DISCONNECT SHALL BE SIZED ACCORDING TO LOAD, AS REQUIRED BY THE NATIONAL ELECTRICAL CODE OR GOVERNING AUTHORITY.

   MAIN DISCONNECTS AND ANY OTHER ELECTRICAL EQUIPMENT THAT IS EXPOSED TO THE ELEMENTS MUST BE OF A WEATHERPROOF AND WATER TIGHT DESIGN.

8. METER BASE AND K-10 SERVICE HOLDER TO BE FURNISHED AND INSTALLED BY CUSTOMER. THEY MUST CONFORM TO HELCO STANDARDS AND BE COMPATIBLE WITH HELCO METERING. THE METER BASE SHALL BE MOUNTED BETWEEN 5' AND 6' (FEET) ABOVE FINISHED GRADE. THE K10C SHALL BE MOUNTED 6" (INCHES) FROM THE TOP OF THE METER POLE IN THE DIRECTION OF HELCO'S SERVICE CABLE. PRE-DRILLING A PILOT HOLE FOR THE K10C IS RECOMMENDED.

9. A METER BASE GROUND SHALL EXTEND FROM THE NEUTRAL OR GROUNDING LUG IN THE METER BASE TO GROUND ROD. THE METER BASE GROUND SHALL BE A MINIMUM #6, SOFT DRAWN COPPER WIRE. THE METER BASE GROUND WIRE MUST BE CONNECTED IN THE GROUND WIRE LUG, WHERE PROVIDED, AND NOT IN THE SERVICE NEUTRAL LUG. THE METER BASE GROUND WIRE MUST BE STAPLED EVERY SIX (6) INCHES.

10. THE POLE GROUNDING CONDUCTOR SHALL BE A MINIMUM #6, BARE, SOFT DRAWN COPPER WIRE AND EXTEND FROM 6" (INCHES) ABOVE THE TOP OF THE METER POLE TO THE GROUND ROD. IT IS INSTALLED 90 AROUND THE POLE TO THE GROUND ROD. IT IS INSTALLED 90 AROUND THE POLE FROM THE SERVICE ENTRANCE CONDUIT. THE POLE GROUNDING CONDUCTOR MUST BE STAPLED, STARTING FROM THE TOP OF THE POLE AT 2' (FOOT) INTERVALS UNTIL A POINT 6' (FEET) ABOVE THE GROUND IS REACHED, THEN STAPLED EVERY 6" (INCHES).

11. GROUND RODS SHALL BE 5/8" X 8" COPPER WELD OR 1/2" X 8' COPPER. PERMANENT METER POLE GROUND RODS SHALL BE SET 1" (INCH) BELOW FINISHED GRADE.

    TEMPORARY METER POLE GROUND RODS CAN BE SET 4" (INCHES) ABOVE FINISHED GRADE.

12. ALL UNUSED OR OPEN HOLES IN THE METER BASE, MAIN DISCONNECTOR DISTRIBUSTION PANEL SHALL BE PLUGGED WITH WATERTIGHT PLUGS.

13. INSPECTION: IF A GOVERNING AUTHORITY REQUIRES INSPECTION, INSPECTION TAG MUST BE IN PLACE AND MARKED APPROVED BEFORE HELCO WILL CONNECT SERVICE.

No.	DATE	DWG. CHK.	REVISIONS
1			
2			
3			

PRINTS TO

DATE

This work was prepared by me or under my supervision and to the best of my knowledge, the project will be under my observation.
Exp. 04-30-16

Wesley R. Segawa & Associates, Inc.

DENNIS K. W. LEE — LICENSED PROFESSIONAL ENGINEER — No. 4004-C — U.S.A. HAWAII

WRSA
Wesley R. Segawa and Associates, Inc.
Committed to Quality Performance & Value
Civil & Structural Engineers
101 Silva Street, Suite 201 Hilo, Hawaii 96720-4755
Telephone: (808) 935-4677 Fax: (808) 935-2070

Project Title: KEAUKAHA TRACT 1 IMPROVEMENTS LOTS 59-B-1 AND 59-B-2

Sheet Title: MISCELLANEOUS NOTES

DESIGN BY:	DRB
DRAWN BY:	DRB
CHECKED BY:	DL
APPROVED BY:	DL
DATE:	X
SCALE:	AS NOTED
FILE No.	W1302.44

DRAWING No. C-2

SHEET No. 3 OF 9 SHTS.

WATERLINE NOTES:

1. ALL WORK SHALL BE DONE ACCORDING TO THE WATER SYSTEM STANDARDS, STATE OF HAWAII, DATED 2002, AS AMENDED.
2. ALL EXISTING WATERLINES, WATERLINE, APPURTENANCES AND OTHER UTILITY LOCATIONS SHOWN ON THE PLANS ARE OBTAINED FROM THE LATEST RELIABLE SOURCES. THE CONTRACTOR SHALL BE RESPONSIBLE TO VERITY THE EXACT LOCATION OF ALL UTILITIES IN THE FIELD AND SHALL BEAR ALL COSTS FOR DAMAGE DONE DURING THE CONTRACT PERIOD.
3. THE CONTRACTOR SHALL INFORM THE D.W.S. ENGINEER 72 HOURS PRIOR TO THE BEGINNING OF ANY WATERLINE WORK AND TWO WEEKS PRIOR TO ANY CONNECTION, CHLORINATION, SHUT-OFF OR RELOCATION WORK.
4. ALL CONNECTIONS TO THE WATER SYSTEMS SHALL BE DONE BY THE D.W.S. THE CONTRACTOR SHALL PERFORM ALL EXCAVATION, BACKFILL, ROAD REPAIR, TRAFFIC CONTROL, AND PROVIDE EQUIPMENT AND MATERIALS NECESSARY TO COMPLETE THE CONNECTION.
5. THE CONTRACTOR SHALL PAY FOR ALL WORK, EQUIPMENT, AND MATERIAL FURNISHED BY THE D.W.S.
6. MINIMUM VERTICAL CLEARANCE BETWEEN WATERLINES AND OTHER UTILITIES SHALL BE 12-INCHES PROVIDED THE OTHER UTILITY IS CONCRETE JACKETED, AND 18-INCHES IF NO CONCRETE JACKETS ARE USED. IN ALL APPLICABLE INSTANCES, THE WATERLINES SHALL BE AT A GRADE HIGHER THAN OTHER UTILITIES. UTILIZE PERPENDICULAR CROSSINGS WHERE PRACTICABLE FOR WATERLINES, CENTER FULL PIPE LENGTHS AT UTILITY CROSSINGS WHENEVER POSSIBLE
7. MINIMUM HORIZONTAL CLEARANCE BETWEEN WATERLINES AND OTHER UTILITIES SHALL BE 8-FEET (CLEAR SPACE – NOT CENTERLINE TO CENTERLINE) FOR ROAD RIGHT-OF-WAYS OF 50 FEET OF LESS, AND 10-FEET FOR ROAD RIGHT-OF-WAYS OF MORE THAN 50 FEET.
8. ALL WATER SYSTEM PIPELINES, 4-INCHES OR LARGER IN DIAMETER, SHALL BE DUCTILE IRON, PUSH ON JOINTS, CLASS 52, AND ALL PIPELINES SMALLER THAN 4-INCHES IN DIAMETER SHALL BE SOFT COPPER, TYPE "K:, UNLESS OTHERWISE SPECIFIED.
9. PIPE CUSHION FOR COPPER SERVICE LATERALS SHALL BE NO. 4 MANUFACTURED FINE SAND.
10. METER BOXES FOR 5/8-INCH METERS PLACED OUTSIDE OF PAYMENT TO BE TYPE "B" PER STD DETAILS M1 & M2. METER BOXES FOR 1-INCH METERS OR FOR 5/8-INCH STD DETAIL M3.
11. RELOCATION OF EXISTING METERS SHALL BE DONE UNDER D.W.S. SUPERVISION. RELOCATION OF CUSTOMER SERVICE LINES TO RELOCATED METERS SHALL BE COPPER (TYPE "K") AND DONE BY THE CONTRACTOR. ALL WORK AND MATERIALS SHALL BE PROVIDED BY THE CONTRACTOR AND CONSIDERED INCIDENTAL TO THE RELOCATION WORK. EXISTING METER BOXES DAMAGED BY THE CONTRACTOR SHALL BE REPLACED AT THE CONTRACTOR'S COST. WHEN APPLICABLE, A DIELECTRIC UNION SHALL BE USED TO CONNECT THE COPPER PIPE TO THE CUSTOMER'S GALVANIZED IRON (G.I.) PIPE.
12. SOLDER (1/8-INCH DIA.) AND FLUX USED SHALL NOT CONTAIN MORE THAN 0.2% LEAD
13. LOTS REQUIRING A DEPARTMENT OF WATER SUPPLY APPROVED BACKFLOW PREVENTION ASSEMBLY SHALL HAVE ONE. IT MUST BE INSTALLED ON PRIVATE PROPERTY IN ACCORDANCE WITH D.W.S. STANDARD DETAIL NO. V9 AND DEPARTMENTAL STAFF MUST APPROVE THE INSTALLATION BEFORE WATER SERVICE CAN BE STARTED.
14. WHERE WATER SHUT–OFF OF MORE THAN 3 HOURS BECOMES NECESSARY, THE CONTRACTOR, AT HIS OWN EXPENSE, SHALL PROVIDE A TEMPORARARY BY–PASS LINE. THE DWS ENGINEER SHALL DETERMINE THE BY–PASS LINE SIZE. IF NECESSARY, THE DWS ENGINEER MAY REQUIRE A BY–PASS LINE, REGARDLESS OF THE EXPECTED SHUT–OFF PERIOD.
15. THE CONTRACTOR SHALL BE RESPONSIBLE FOR RECORD DRAWINGS (AS–BUILT DRAWINGS) AND THE LICENSED ENGINEER SHALL CERTIFY THE DRAWINGS AS TO ACCURACY AND SUBMIT THE DRAWINGS AND AS–BUILT TRACINGS TO THE DWS.
16. AFTER JANUARY 4, 2014, ALL BRASS PRODUCTS MUST CONFORM TO NSF STANDARD 61 AND NSF STANDARD 372 OF THE SDWA, AND BE CERTIFIED AS "LEAD–FREE" BY THE MANUFACTURER. "LEAD–FREE" IS DEFINED AS THE ALLOWABLE LEAD CONTENT OF NOT MORE THAN 0.25% IN THE WETTED SURFACE. CERTIFICATION FROM THE MANUFACTURER MUST BE SUBMITTED TO THE DEPARTMENT OF WATER SUPPLY FOR REVIEW AND APPROVAL PRIOR TO INSTALLATION. ANY BRASS PRODUCT INSTALLED WITHOUT APPROVAL MUST BE REMOVED AT NO EXPENSE TO THE DEPARTMENT.
17. BOXED WATERLINE DETAILS BELOW TAKEN FROM THE WATER SYSTEM STANDARDS.

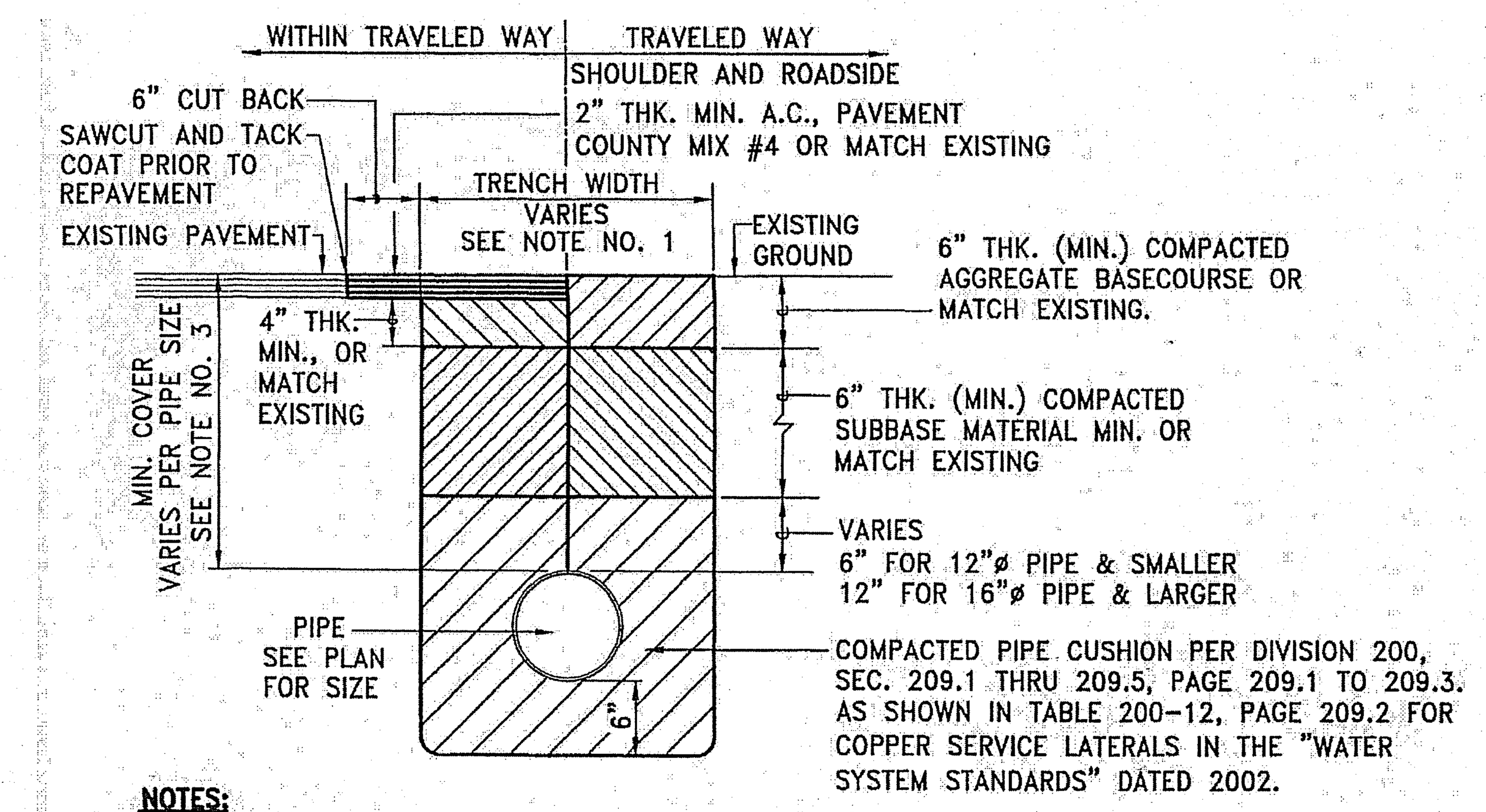

NOTES:
1. SEE TABLE 300–1, PAGE 302–3, WATER SYSTEM STANDARDS, 2002.
2. LOCAL MATERIAL MAY BE USED OUTSIDE SHOULDER AREA.
3. SEE TABLE 100–3, PAGE 102.4, WATER SYSTEM STANDARDS, 2002.
4. DRIVEWAY RESTORATION
   - A. WHERE EXISTING DRIVEWAY IS CONCRETE, 4" THK. CONCRETE REINFORCED WITH 6 X 6 X 10/10 WWM ON 4" THK. BASECOURSE SHALL BE USED IN LIEU OF THE ABOVE SECTION.
   - B. WHERE AN EXISTING DRIVEWAY IS UNPAVED, THE DRIVEWAY SHALL BE RESTORED TO A CONDITION EQUAL TO OR BETTER THAN THE EXISTING DRIVEWAY.
   - C. WHERE EXISTING DRIVEWAY IS PAVED, THE DRIVEWAY SHALL BE RESTORED AS SHOWN ABOVE
   - D. CONTRACTOR SHALL NOTIFY THE OWNER OF THE DRIVEWAY 48 HOURS BEFORE COMMENCEMENT OF ANY WORKS

1 / C–3 TYPICAL TRENCH AND PAVEMENT REPAIR SECTION FOR WATERLINES
NOT TO SCALE

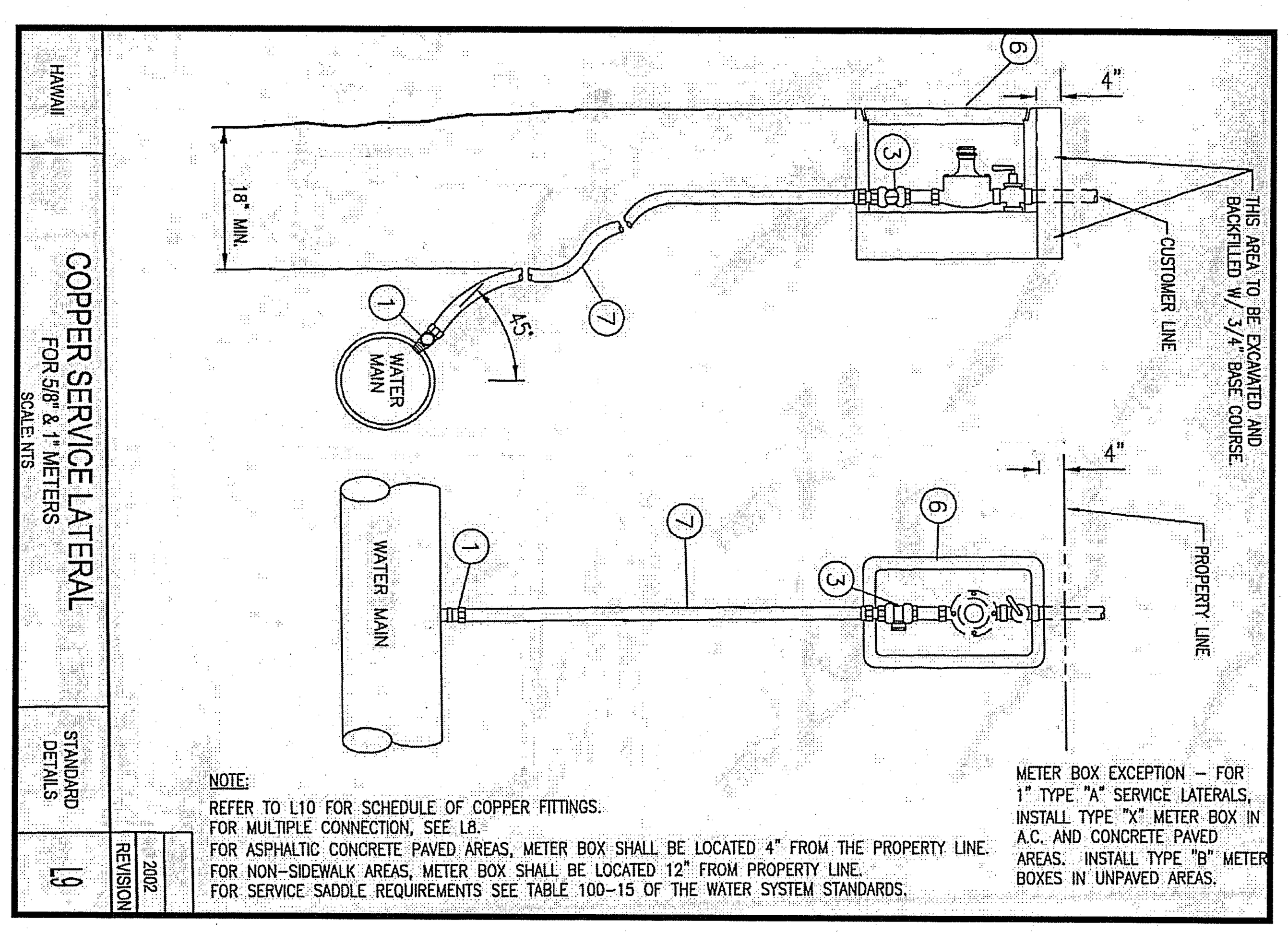

2 / C–3 TYPICAL SINGLE SERVICE LATERAL
NOT TO SCALE

HAWAII — SERVICE LATERAL/CONNECTION MATERIAL SCHEDULE — SCALE: NTS — STANDARD DETAILS — L10 — REVISION 2002

SERVICE LATERAL AND CONNECTION MATERIAL SCHEDULE

TYPE	SIZE	BRONZE BALL CORP. (a) SIZE	QNT.	BRONZE CURB STOP (b) SIZE	QNT.	BRONZE CURB STOP (c) SIZE	QNT.	TEE CxCxC STYLE SIZE	QNT.	90° ELBOW CxC STYLE SIZE	QNT.	METER BOX QNT.	COPPER TUBING TYPE K SIZE	METER SIZE	QNT.	CUSTOMER VALVE (d) SIZE	QNT.
A	1	1X1	1			1*	1					1	1	5/8	1	3/4	1
A	1- 1/2	1-1/2X1-1/2	1			1-1/2	1					1	1- 1/2	1	1	1	1
A	2	2X2	1			2	1					1	2	1- 1/2	1	1-1/2	1
A	2- 1/2	2X2	1			2	1					1	2- 1/2	2	1	2	1
B	1- 1/2	1-1/2X1-1/2	1	1-1/2	1	1*	2	1 x 1 x 1-1/2	1			2	1- 1/2	5/8	2	3/4	2
B	1- 1/2	1-1/2x1-1/2	1	1-1/2	1	1-1/2"	2	1-1/2X1-1/2X1-1/2	1			2	1- 1/2	1	2	1	2
B	2- 1/2	2X2	1	2-1/2	1	2	2	2 X 2 X 2- 1/2	1			2	2- 1/2	1- 1/2	2	1-1/2	2
C	1- 1/2	1-1/2X1-1/2	1	1-1/2	1	1*	2	1 X 1 X 1- 1/2	1	1	2	2	1- 1/2	5/8	2	3/4	2
C	1- 1/2	1-1/2x1-1/2	1	1-1/2	1	1-1/2"	2	1-1/2X1-1/2X1-1/2	1	1- 1/2	2	2	1- 1/2	1	2	1	2
C	2- 1/2	2X2	1	2-1/2	1	2	2	2 X 2 X 2- 1/2	1	2	2	2	2- 1/2	1-1/2	2	1-1/2	2
D	1- 1/2	1-1/2x1-1/2	1	1-1/2	1	1*	3	1-1/2x1x1-1/2 1- 1/2 X 1 X 1	1 1	1	2	3	1- 1/2	5/8	3	3/4	3
ITEM NO.		①		②		③		④		⑤		⑥	⑦	⑧		⑨	

(a) BRONZE BALL CORP.
INLET: AWWA TAPER
OUTLET: PACK JOINT, "M.P.T. W/ADAPTER (F.P.T. x PACK JOINT)" OR M.P.T. W/ BRASS UNION (FPT X C)
(b) BRONZE BALL CURB STOP
INLET–OUTLET: PACK JOINTS OR FPT W/ ADAPTER (C X MPT)
(*) 1" SERVICE CONNECTION
INLET: (TO FIT 1" COPPER PIPE)
OUTLET: METER COUPLING FOR 5/8" x 3/4" METER

(c) BRONZE BALL CURB STOP
INLET: PACK JOINT
OUTLET: METER COUPLING OR FPT W/BRASS BUSHING
OR
INLET: FPT W/ ADAPTER (C X MPT)
OUTLET: FPT W/BRASS BUSHING
OR
INLET: FPT W/ ADAPTER (C X MPT)
OUTLET: FPT W/ BRASS BUSHING AND METER COUPLING.

(d) CUSTOMER VALVE: BALL VALVE WITH HAND LEVER
INLET: METER COUPLING OR FLANGE, PACK JOINT, OR FPT.
OUTLET: FPT OR PACK JOINT.

3 / C–3 SCHEDULE OF COPPER FITTINGS
NOT TO SCALE

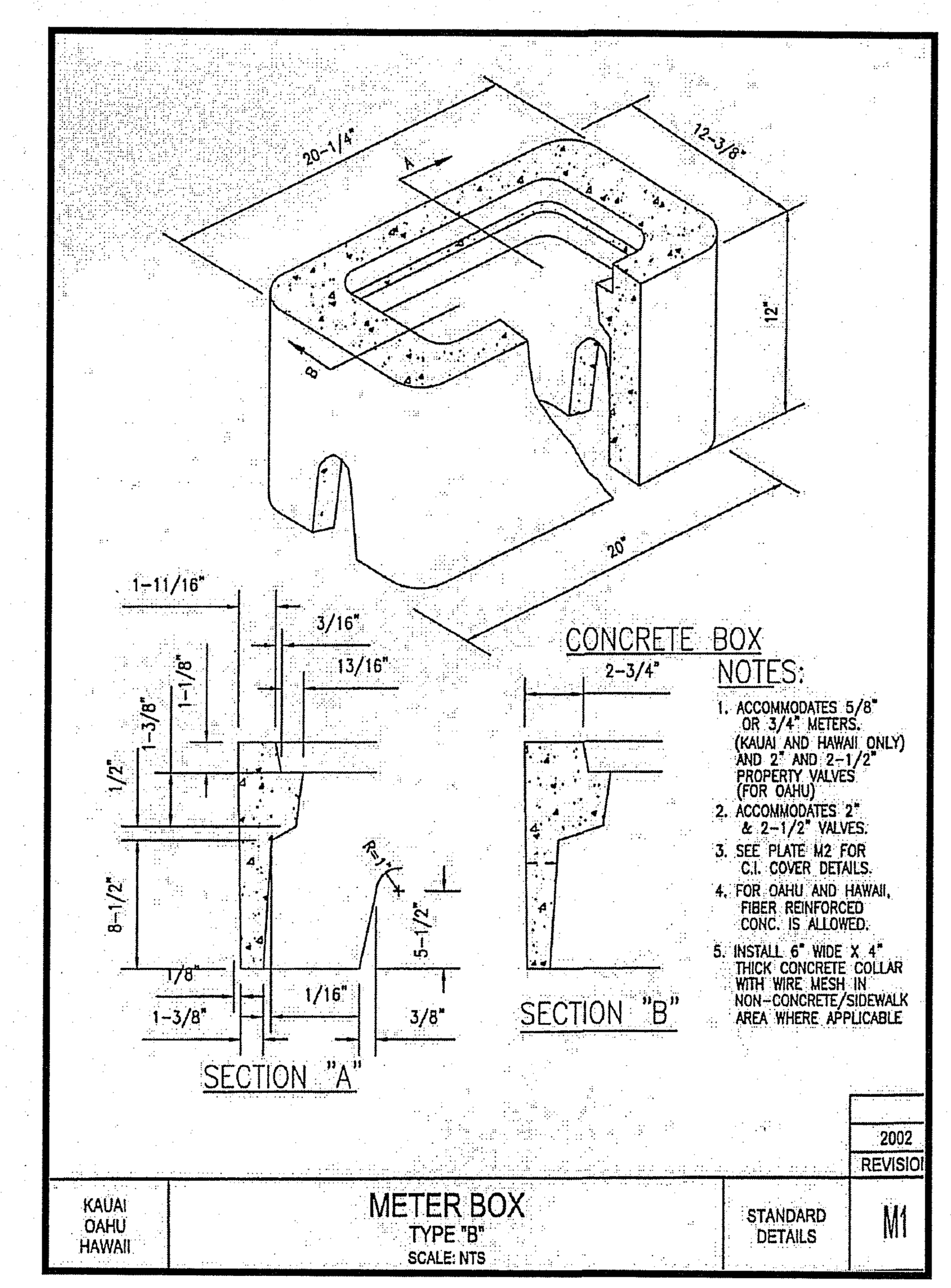

4 / C–3 METER BOX TYPE "B"
NOT TO SCALE

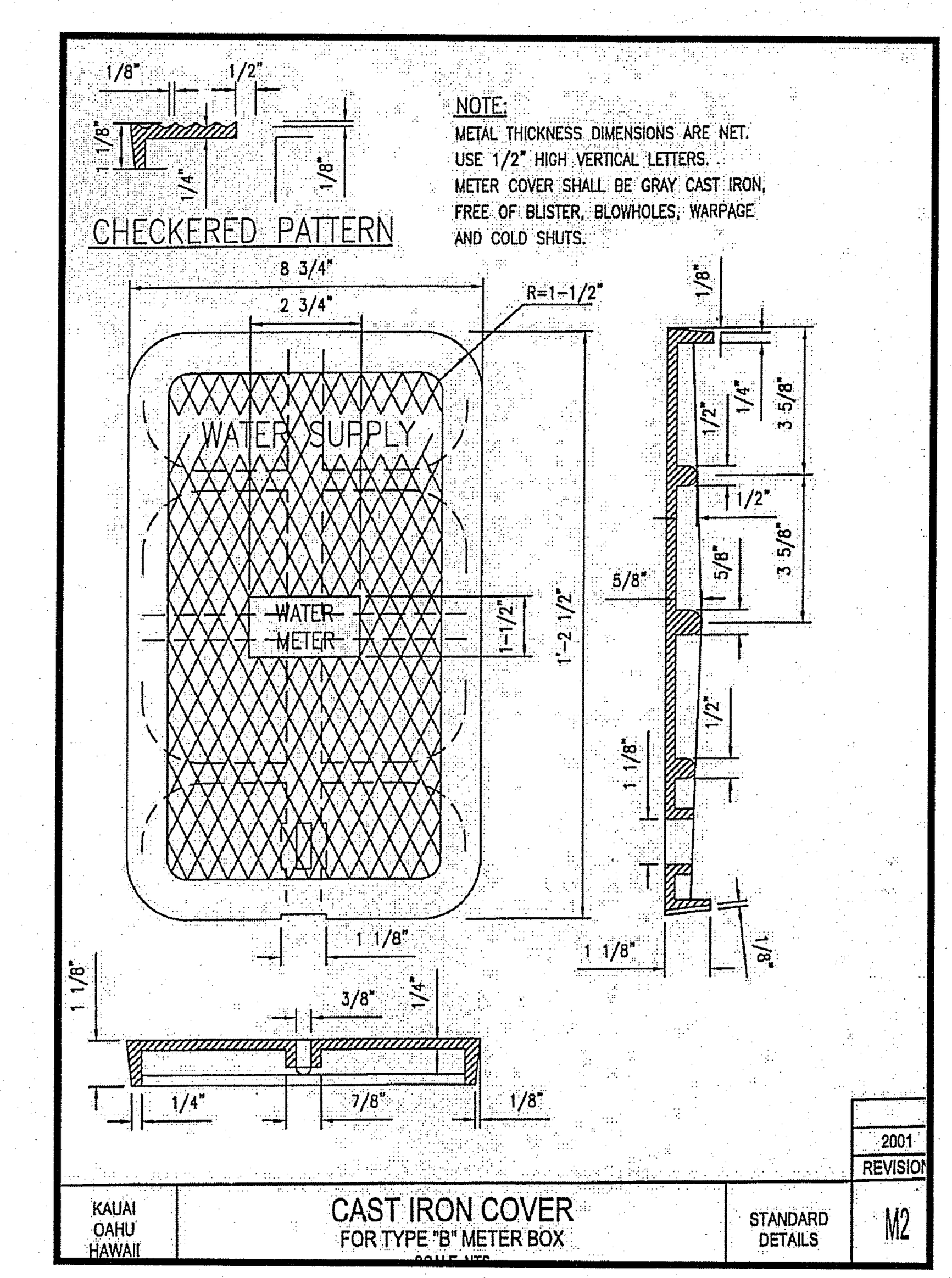

5 / C–3 CAST IRON COVER FOR TYPE "B" METER BOX
NOT TO SCALE

REVISIONS			
No.	DATE	DWG.	CHK.
PRINTS TO		DATE	

This work was prepared by me or under my supervision and construction of this project will be under my observation.
Exp. 04–30–16

Wesley R. Segawa & Associates, Inc.

DENNIS K. W. LEE — LICENSED PROFESSIONAL ENGINEER — No. 4004–C — HAWAII, U.S.A.

WRSA
Wesley R. Segawa and Associates, Inc.
Committed to Quality Performance & Value
Civil & Structural Engineers
101 Silva Street, Suite 201 Hilo, Hawaii 96720-4755
Telephone: (808) 935-4677 Fax: (808) 935-2070

Project Title: KEAUKAHA TRACT 1 IMPROVEMENTS LOTS 59-B-1 AND 59-B-2

Sheet Title: WATER NOTES & DETAILS

DESIGN BY: DRB
DRAWN BY: DRB
CHECKED BY: DL
APPROVED BY: DL
DATE: X
SCALE: AS NOTED
FILE No. W1302.44

DRAWING No. C-3

SHEET No. 4 OF 9 SHTS.

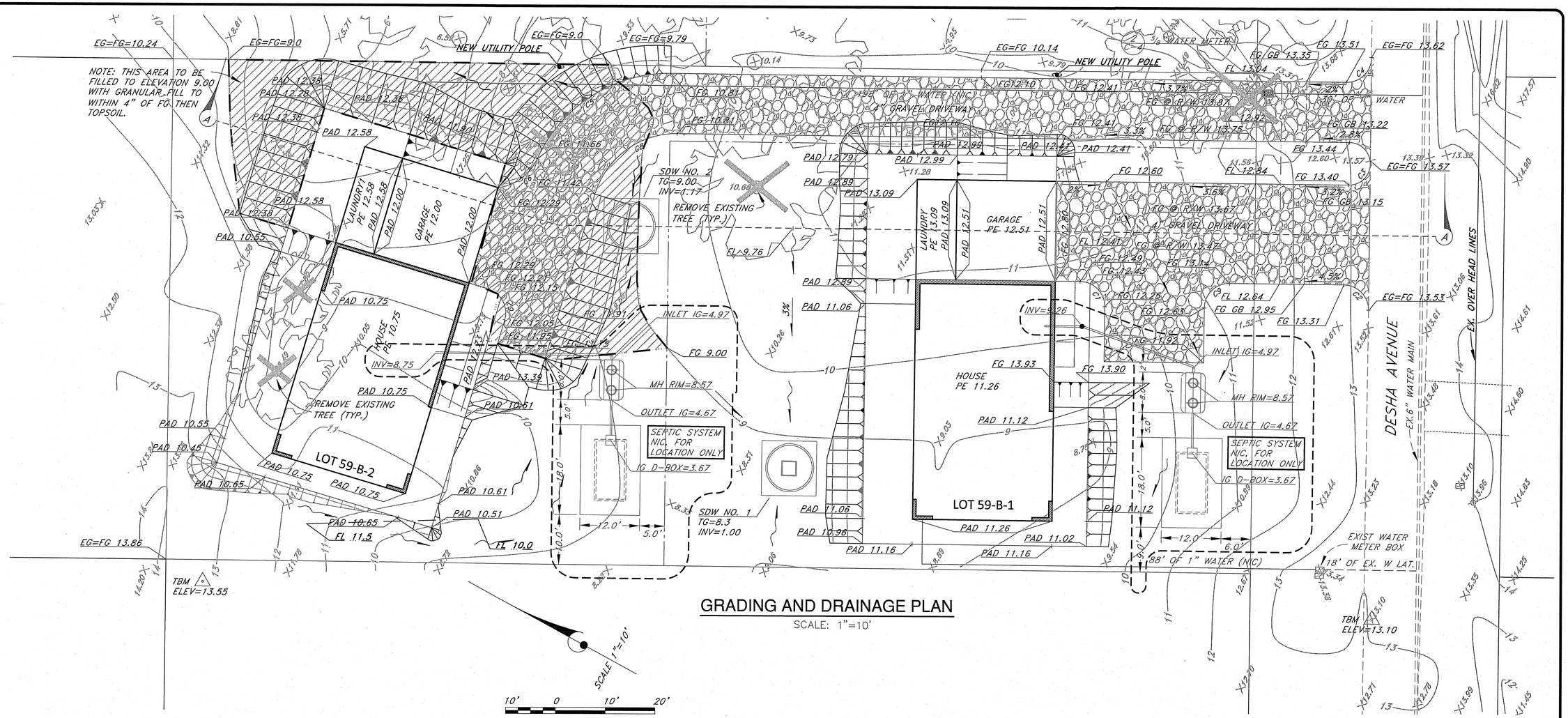

GRADING AND DRAINAGE PLAN

SCALE: 1"=10'

Curve Table					
Curve #	Length	Radius	Delta	Chord Direction	Chord Length
C1	7.85	5.00	90.00	N16° 54' 00"E	7.07
C2	7.85	5.00	89.98	N16° 53' 30"E	7.07
C3	13.35	4.25	180.00	N61° 54' 00"E	8.50
C4	7.86	5.00	90.07	S73° 08' 14"E	7.08
C5	33.59	29.00	66.36	N61° 16' 41"W	31.74

Curve Table					
Curve #	Length	Radius	Delta	Chord Direction	Chord Length
C6	10.21	10.00	58.48	S65° 13' 01"E	9.77
C7	7.85	5.00	90.00	N33° 00' 00"E	7.07
C8	21.93	17.00	73.90	N65° 03' 00"W	20.44
C9	7.85	5.00	90.00	N73° 06' 00"W	7.07

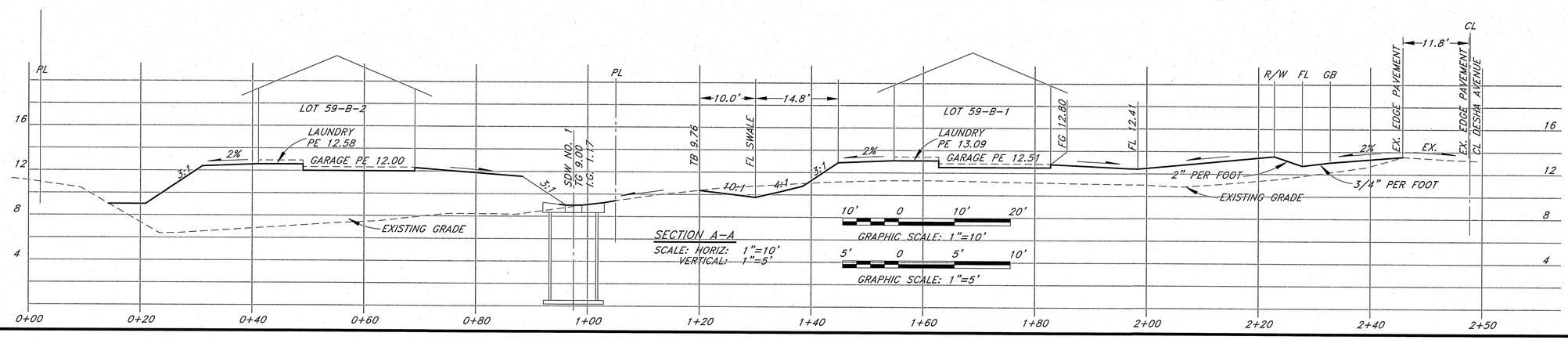

SECTION A-A

SCALE: HORIZ: 1"=10'
VERTICAL: 1"=5'

10' 0 10' 20'
GRAPHIC SCALE: 1"=10'

5' 0 5' 10'
GRAPHIC SCALE: 1"=5'

No.	DATE	DWG. CHK.	REVISIONS

PRINTS TO DATE

This work was prepared by me or under my supervision and construction of this project will be under my observation. Exp. 04-30-15

LEE K.W. SINGO — LICENSED PROFESSIONAL ENGINEER — No. 4004-C — USA HAWAII

Wesley R. Segawa & Associates, Inc.

Civil & Structural Engineers
101 Silva Street, Hilo, Hawaii 96720-4755
Suite 201 Telephones: (808) 935-4677 Fax: (808) 935-2070
Wesley R. Segawa and Associates, Inc.
Committed to Quality Performance & Value

Project Title: KEAUKAHA TRACT 1 IMPROVEMENTS LOTS 59-B-1 AND 59-B-2

Sheet Title: GRADING AND DRAINAGE PLAN

DESIGN BY:	DRB
DRAWN BY:	DRB
CHECKED BY:	DL
APPROVED BY:	DL
DATE:	X
SCALE:	AS NOTED
FILE No.	W1302.44

DRAWING No. C-4

SHEET No. 5 OF 9 SHTS.

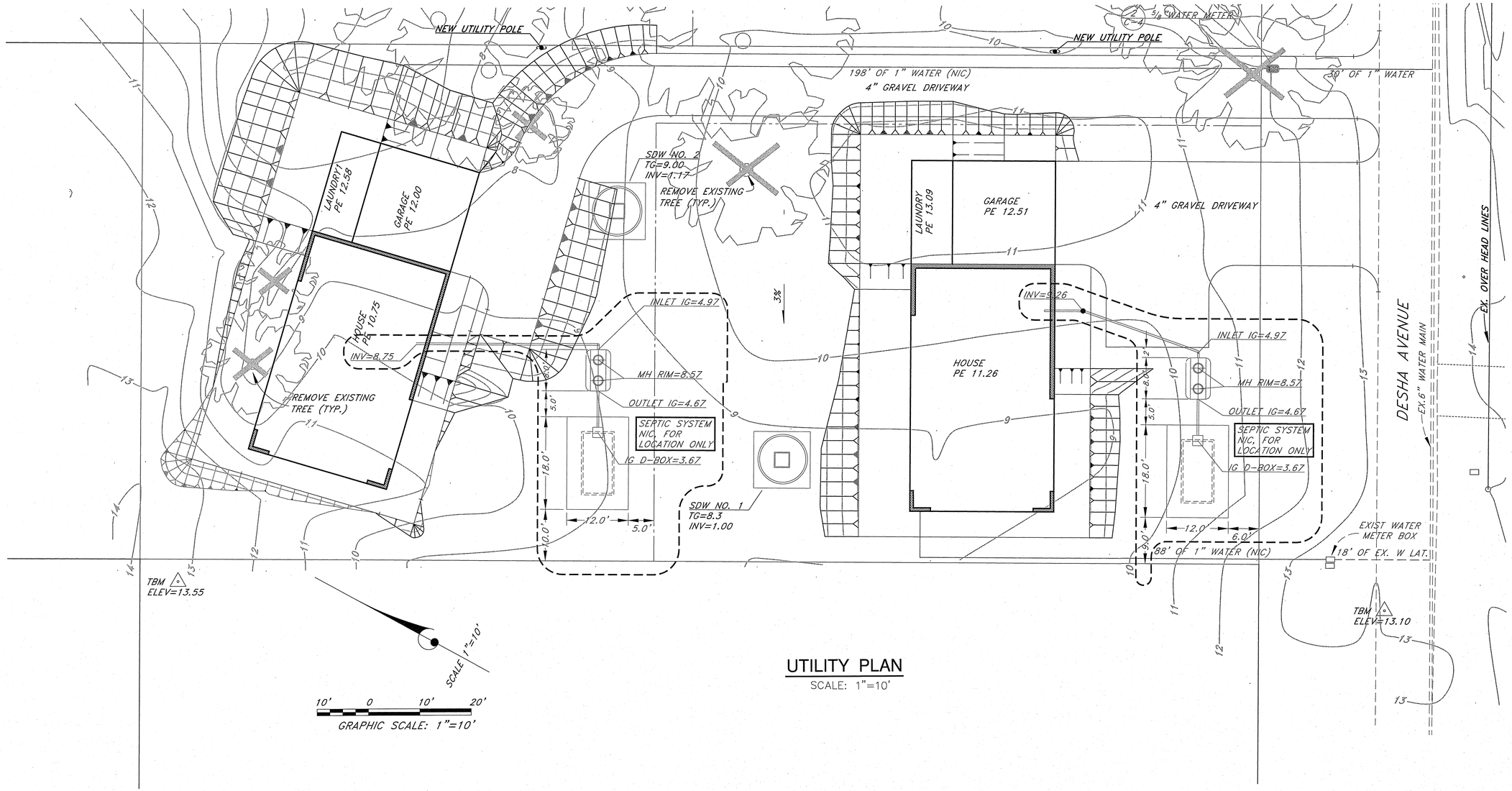

UTILITY PLAN

SCALE: 1"=10'

No.	DATE	DWG.	CHK.	REVISIONS
1				
2				
3				

PRINTS TO

DATE

This work was prepared by me or under my supervision and construction of this project was supervised by me under my observation.
Exp. 04-30-16

Wesley R. Segawa & Associates, Inc.

DENNIS K.W. LEE LICENSED PROFESSIONAL ENGINEER No. 4004-C * HAWAII * USA

WRSA
Wesley R. Segawa and Associates, Inc.
Committed to Quality Performance & Value
Civil & Structural Engineers
101 Silva Street, Suite 201 Hilo, Hawaii 96720-4755
Telephone: (808) 935-4677 Fax: (808) 935-2070

Project Title: KEAUKAHA TRACT 1 IMPROVEMENTS LOTS 59-B-1 AND 59-B-2

Sheet Title: UTILITY PLAN

DESIGN BY:	DRB
DRAWN BY:	DRB
CHECKED BY:	DL
APPROVED BY:	DL
DATE:	X
SCALE:	AS NOTED
FILE No.	W1302.44

DRAWING No. C-5

SHEET No. 6 OF 9 SHTS.

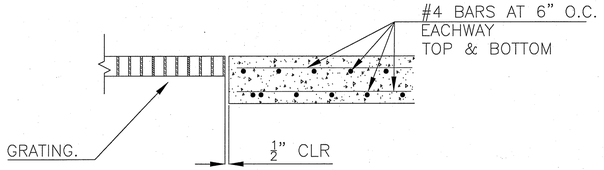

SECTION A–A
NOT TO SCALE

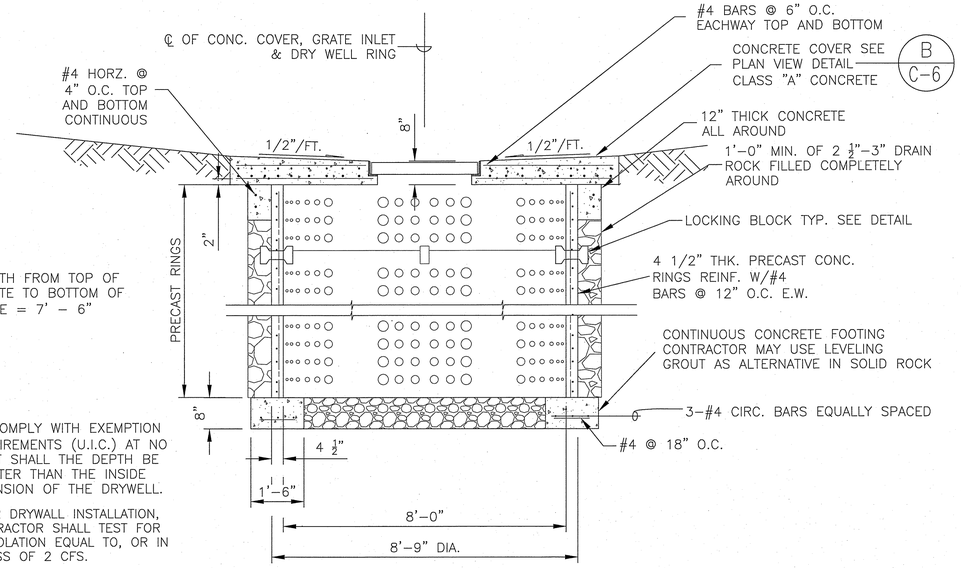

DEPTH FROM TOP OF GRATE TO BOTTOM OF HOLE = 7' – 6"

NOTES:

1. TO COMPLY WITH EXEMPTION REQUIREMENTS (U.I.C.) AT NO POINT SHALL THE DEPTH BE GREATER THAN THE INSIDE DIMENSION OF THE DRYWELL.
2. AFTER DRYWALL INSTALLATION, CONTRACTOR SHALL TEST FOR PERCOLATION EQUAL TO, OR IN EXCESS OF 2 CFS.

CONCRETE RING DRYWELL
NOT TO SCALE

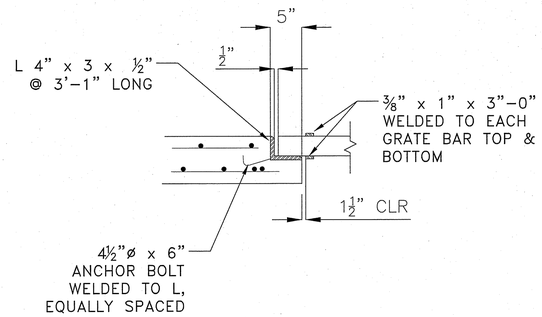

SECTION B–B
NOT TO SCALE

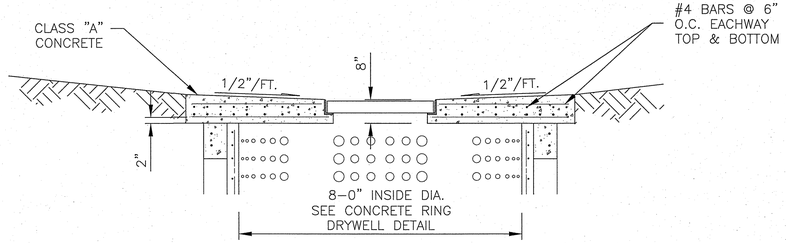

SECTION A–A
NOT TO SCALE

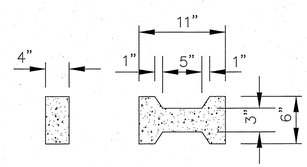

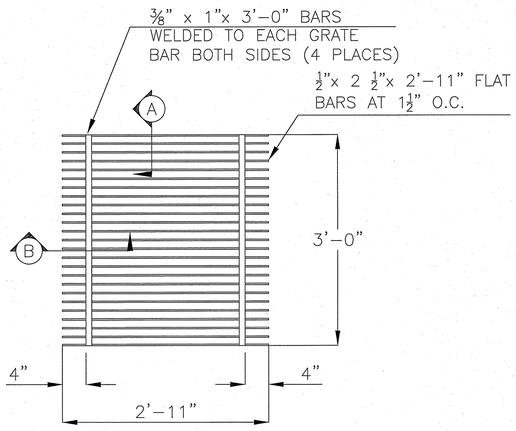

GRATING
NOT TO SCALE

A C-6 DRYWELL GRATE DETAIL
NOT TO SCALE

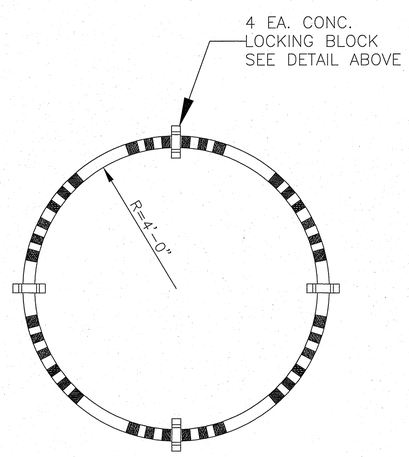

TYPICAL RING CROSS SECTION
NOT TO SCALE

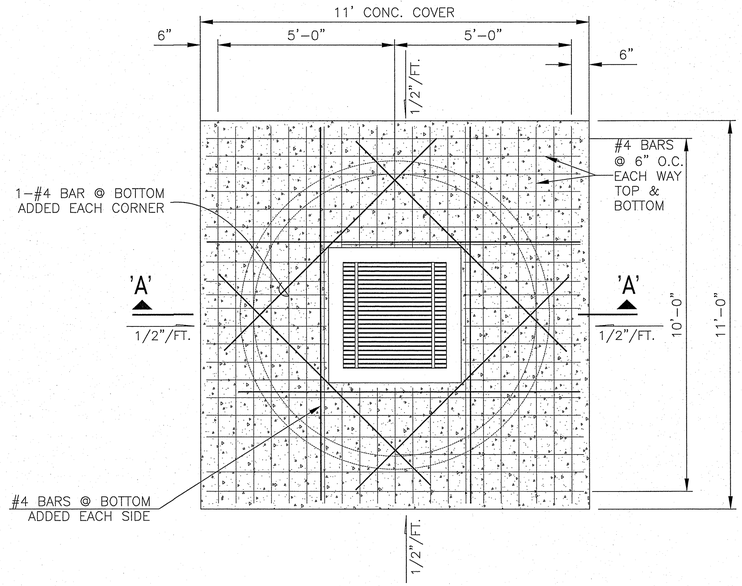

PLAN
NOT TO SCALE

B C-6 CONCRETE DRYWELL DETAIL
NOT TO SCALE

No.	DATE	DWG.	CHK.	REVISIONS
△				
△				
△				

DATE | PRINTS TO

This work was prepared by me or under my supervision and construction of this project will be under my observation. Exp. 04-30-16

Dennis K. W. Lee
Wesley R. Segawa & Associates, Inc.

DENNIS K. W. LEE LICENSED PROFESSIONAL ENGINEER No. 4004-C HAWAII U.S.A.

WRSA
Wesley R. Segawa and Associates, Inc.
Committed to Quality Performance & Value
Civil & Structural Engineers
101 Silva Street, Suite 201 Hilo, Hawaii 96720-4755
Telephone: (808) 935-4677 Fax: (808) 935-2070

Project Title: KEAUKAHA TRACT 1 IMPROVEMENTS
LOTS 59-B-1 AND 59-B-2
Sheet Title: SHALLOW DRYWELL DETAILS

DESIGN BY: DRB
DRAWN BY: DRB
CHECKED BY: DL
APPROVED BY: DL
DATE: X
SCALE: AS NOTED
FILE No. W1302.44

DRAWING No. C-6

SHEET No. 7 OF 9 SHTS.

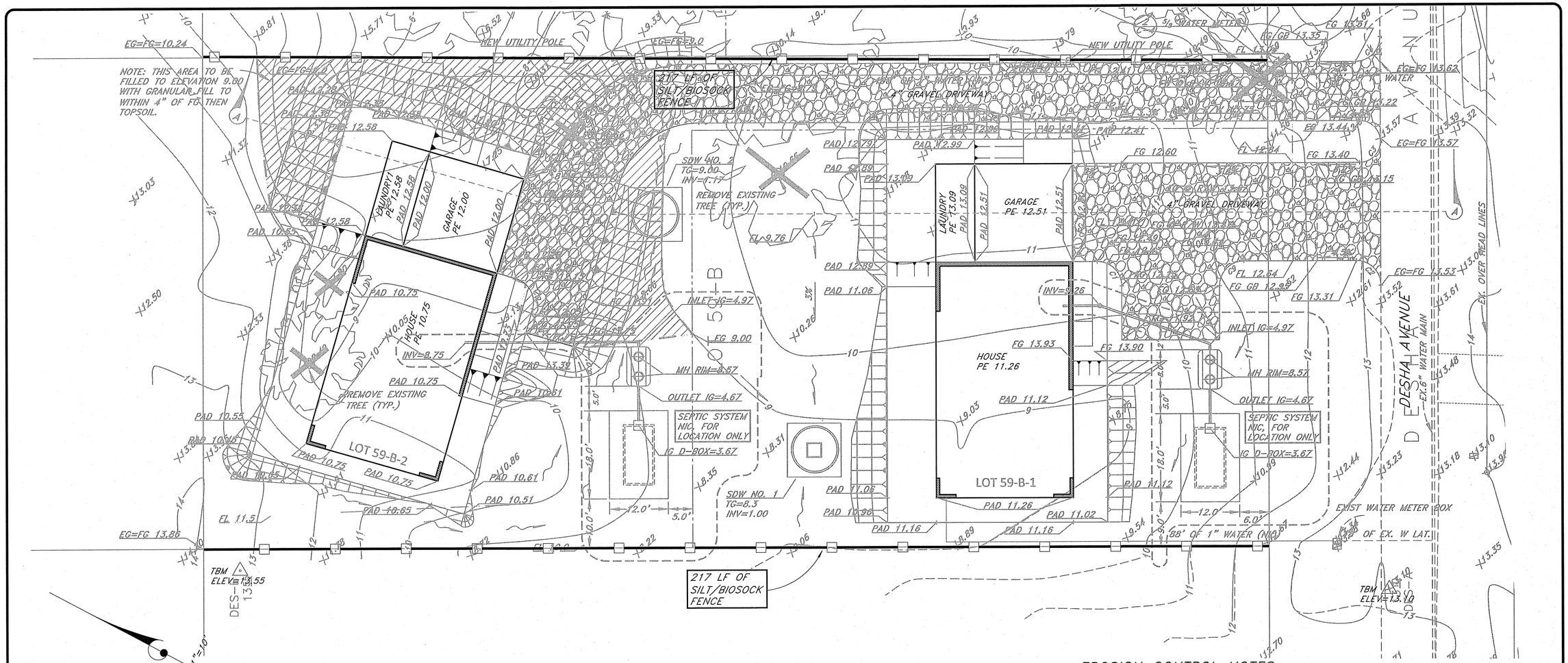

LEGEND:

SILT FENCE/BIOSOCK

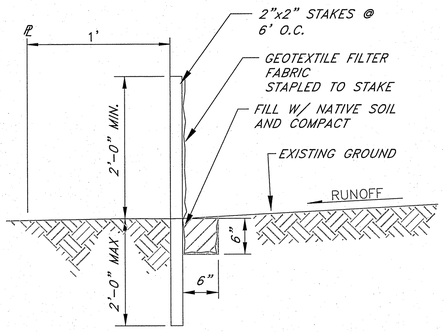

SILT FENCE NOTES:

BIOSOCK MAYBE USED IN LIEU OF SILT FENCE.

THE CONTRACTOR SHALL INSTALL SILT FENCES OR BIO-SOCK PRIOR TO CONSTRUCTION.

ALL BEST MANAGEMENT PRACTICES (BMP'S) SHALL NOT BE REMOVED UNTIL ALL PERMANENT EROSION CONTROL MEASURES ARE IN PLACE AND ESTABLISHED.

AT THE END OF GRADING OPERATIONS, EXISTING CB'S AND DMH'S SURROUNDING THE PROJECT SITE SHALL BE INSPECTED AND ANY ACCUMULATED SEDIMENT AND DEBRIS FOUND IN THE DRAIN STRUCTURES SHALL BE REMOVED. FLUSHING INTO THE CB'S AND DMH'S ARE PROHIBITED.

SILT FENCE DETAIL

NO SCALE

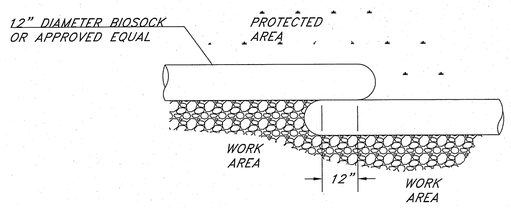

PLAN VIEW

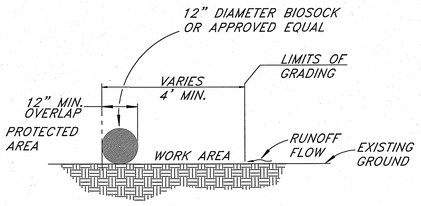

ELEVATION VIEW

BIOSOCK DETAIL (12" DIA)

NOT TO SCALE

EROSION CONTROL NOTES:

1. THE CONTRACTOR SHALL REFER TO THE RULES RELATING TO SOILS EROSION STANDARDS AND GUIDELINES, APRIL 1999, BY THE CITY AND COUNTY OF HONOLULU DEPARTMENT OF PLANNING AND PERMITTING FOR BEST MANAGEMENT PRACTICES.
2. THE CONTRACTOR SHALL STABILIZE THE CONSTRUCTION SITE AT ALL POINTS OF EGRESS AND INGRESS WITH A 12' WIDE X 20' LONG X 8" DEEP SECTION OF NO. 2 CRUSHED ROCK.
3. STOCKPILES SHALL NOT BE LOCATED IN DRAINAGE WAYS OR OTHER AREAS OF CONCENTRATED FLOWS. SEDIMENT TRAPPING DEVICES SUCH AS FENCES, TRAPS, BASINS OR BARRIERS SHALL BE USED AROUND THE BASE OF ALL STOCKPILES.
4. DUST CONTROL SHOULD BE APPLIED TO REDUCE DUST EMISSIONS. THE CONTRACTOR, AT THEIR OWN EXPENSE, SHALL KEEP THE PROJECT AREA AND SURROUNDING AREA FREE FROM DUST NUISANCE. THE WORK SHALL BE IN CONFORMANCE WITH THE AIR POLLUTION CONTROL STANDARDS CONTAINED IN HAWAII ADMINISTRATIVE RULES: CHAPTER 11-60, "AIR POLLUTION CONTROL".
5. SURFACE FLOW FROM ABOVE AN EXPOSED SLOPE SHALL NOT BE ALLOWED TO FLOW OVER THE SLOPE WITHOUT PROTECTION. SLOPE PROTECTION SHALL BE USED ON AREAS WITH SLOPES GREATER THAN 50% AND ON AREAS OF MODERATE SLOPES THAT ARE PRIME TO EROSION.
6. ALL STORM DRAIN INLETS ON SITE, AND THOSE OFFSITE WHICH MAY RECEIVE RUNOFF FROM THE SITE SHALL USE AN INLET PROTECTION DEVICE.
7. TEMPORARY STABILIZATION IS NOT REQUIRED WHEN THE DISTURBED AREA WILL BE WORKED WITHIN A 14 DAY PERIOD. STABILIZATION IS REQUIRED FOR DISTURBED AREAS AT FINAL GRADE AND FOR THOSE AREAS THAT WILL NOT BE WORKED WITHIN A 14 DAY PERIOD.
8. ALL DISTURBED AREAS SHALL BE PERMANENTLY STABILIZED PRIOR TO REMOVING EROSION AND SEDIMENT MEASURES. ALL TEMPORARY EROSION AND SEDIMENT CONTROL MEASURES SHALL BE REMOVED WITHIN 30 DAYS AFTER FINAL SITE STABILIZATION OR AFTER THE TEMPORARY MEASURES ARE NO LONGER NEEDED. TRAPPED SEDIMENT AND AREAS OF DISTURBED SOIL WHICH RESULT FROM THE REMOVAL OF THE TEMPORARY MEASURES SHALL BE IMMEDIATELY PERMANENTLY STABILIZED.

No.	DATE	DWG. CHK.	REVISIONS

PRINTS TO

DATE

This work was prepared by me or under my supervision and construction of this project will be under my observation. Exp. 04-30-16

Wesley K. Segawa & Associates, Inc.

DENNIS K.W. LEE LICENSED PROFESSIONAL ENGINEER No. 4004-C HAWAII U.S.A.

WRSA
Wesley R. Segawa and Associates, Inc.
Committed to Quality Performance & Value
Civil & Structural Engineers
101 Silva Street, Suite 201 Hilo, Hawaii 96720-4755
Telephone: (808) 935-4677 Fax: (808) 935-2070

Project Title: KEAUKAHA TRACT 1 IMPROVEMENTS

Sheet Title: LOTS 59-B-1 AND 59-B-2 EROSION CONTROL (BMP) PLAN

DESIGN BY:	DRB
DRAWN BY:	DRB
CHECKED BY:	DL
APPROVED BY:	DL
DATE:	X
SCALE:	AS NOTED
FILE No.	W1302.44

DRAWING No. C-7

SHEET No. 8 OF 9 SHTS.

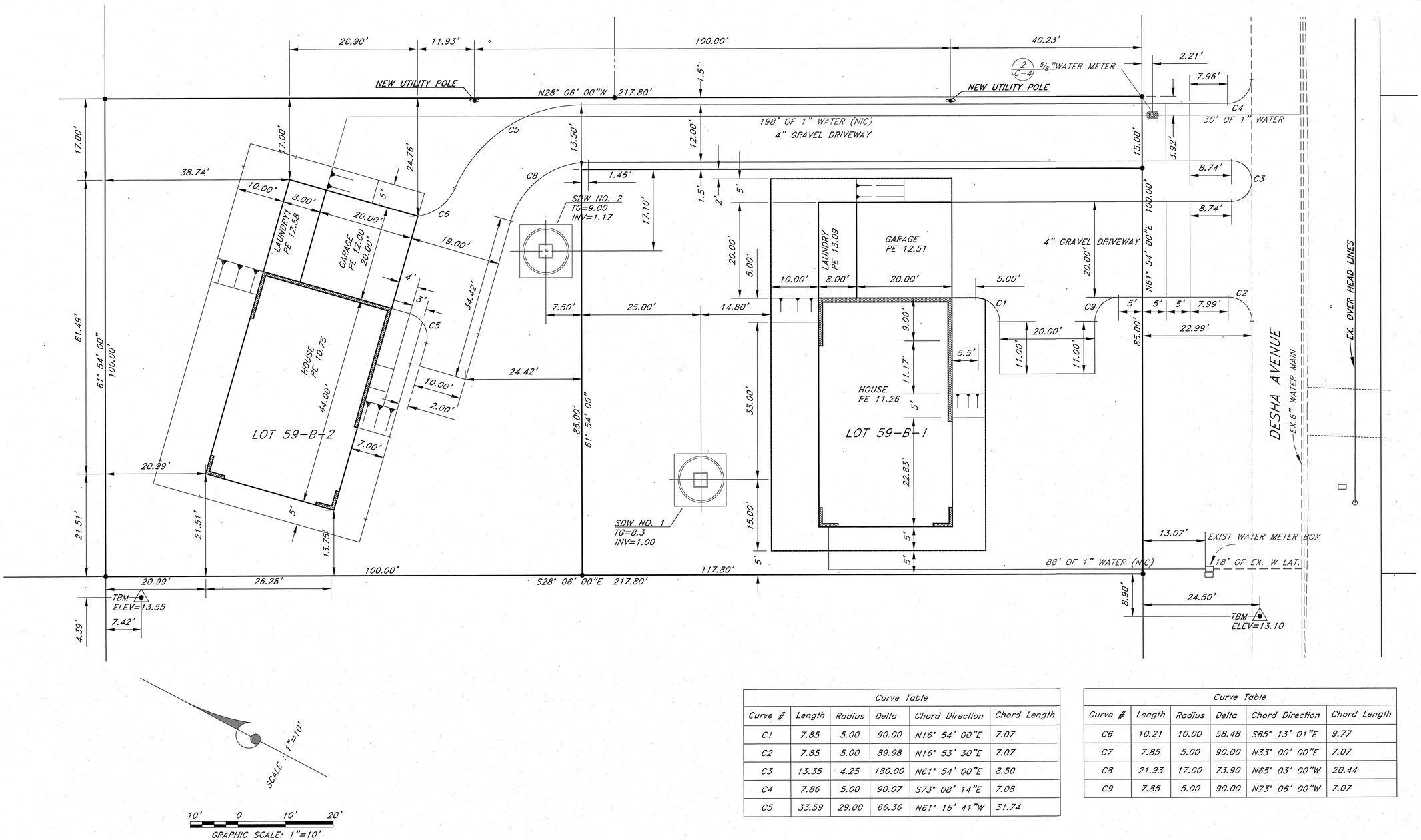

Curve Table					
Curve #	Length	Radius	Delta	Chord Direction	Chord Length
C1	7.85	5.00	90.00	N16° 54' 00"E	7.07
C2	7.85	5.00	89.98	N16° 53' 30"E	7.07
C3	13.35	4.25	180.00	N61° 54' 00"E	8.50
C4	7.86	5.00	90.07	S73° 08' 14"E	7.08
C5	33.59	29.00	66.36	N61° 16' 41"W	31.74

Curve Table					
Curve #	Length	Radius	Delta	Chord Direction	Chord Length
C6	10.21	10.00	58.48	S65° 13' 01"E	9.77
C7	7.85	5.00	90.00	N33° 00' 00"E	7.07
C8	21.93	17.00	73.90	N65° 03' 00"W	20.44
C9	7.85	5.00	90.00	N73° 06' 00"W	7.07

No.	DATE	DWG. CHK.	REVISIONS

PRINTS TO

DATE

This work was prepared by me or under my supervision and construction of this project will be under my observation. Exp. 04-30-16

Wesley R. Segawa & Associates, Inc.

DENNIS K.W. LEE LICENSED PROFESSIONAL ENGINEER No. 4004-C HAWAII U.S.A.

WRSA
Wesley R. Segawa and Associates, Inc.
Committed to Quality Performance & Value
Civil & Structural Engineers
101 Silva Street, Suite 201 Hilo, Hawaii 96720-4755
Telephone: (808) 935-4677 Fax: (808) 935-2070

Project Title: KEAUKAHA TRACT 1 IMPROVEMENTS

Sheet Title: LOTS 59-B-1 AND 59-B-2 DIMENSION PLAN

DESIGN BY:	DRB
DRAWN BY:	DRB
CHECKED BY:	DL
APPROVED BY:	DL
DATE:	X
SCALE:	AS NOTED
FILE No.	W1302.44

DRAWING No. C-8

SHEET No. 9 OF 9 SHTS.

STATE OF HAWAII
DEPARTMENT OF HAWAIIAN HOME LANDS

KEAUKAHA TRACT 1 IMPROVEMENTS

LOT 63-A AND 63-B

WAIAKEA, SOUTH HILO, HAWAII
TAX MAP KEY: (3) 2 - 1 - 021: 100
IFB-16-HHL-014
SUBDIVISION APPLICATION NO: SUB-16-001574

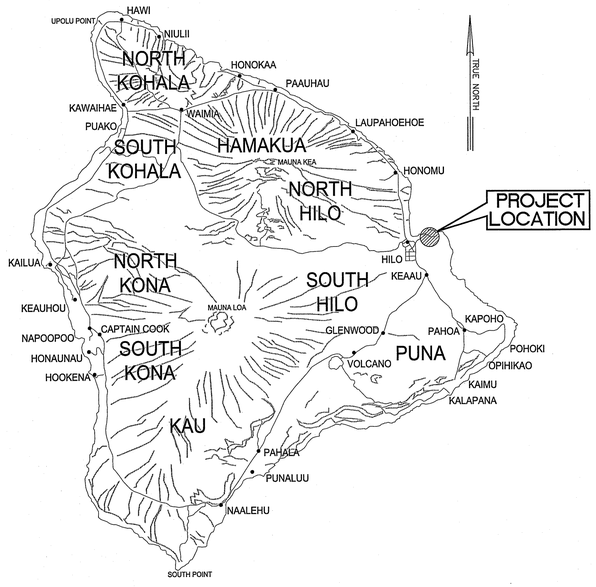

ISLAND OF HAWAII
NOT TO SCALE

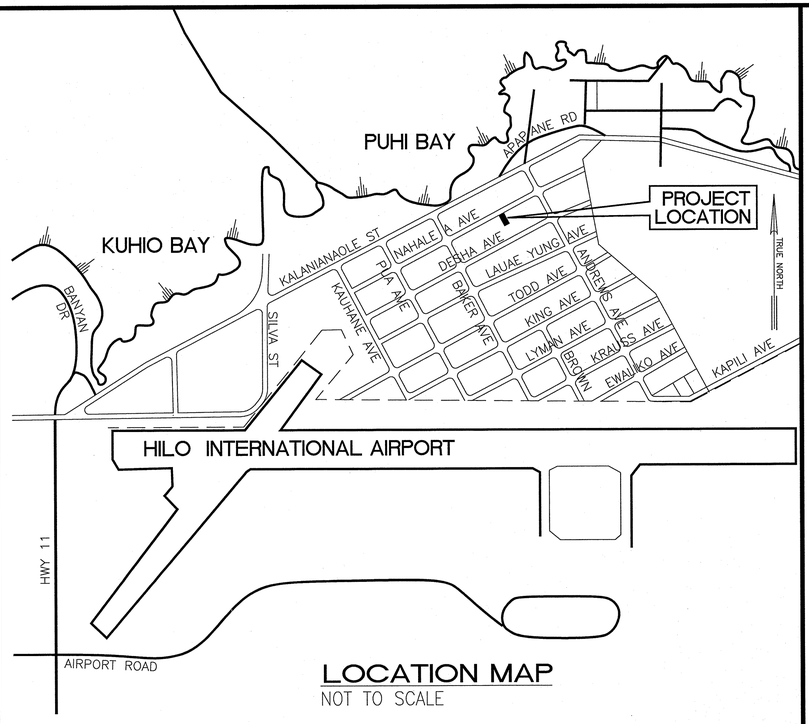

LOCATION MAP
NOT TO SCALE

I N D E X

SHEET NO.	DESCRIPTION	DRAWING NO.
1	TITLE SHEET	T-1
2	MISCELLANEOUS NOTES	C-1
3	UTILITY POLE NOTES & SPECIFICATIONS	C-2
4	WATER NOTES & DETAILS	C-3
5	WASTEWATER COLLECTION NOTES	C-4
6	GRADING AND DRAINAGE PLAN	C-5
7	UTILITY PLAN	C-6
8	SHALLOW DRYWELL DETAILS	C-7
9	SANITARY SEWER DETAILS	C-8
10	SANITARY SEWER GRINDER PUMP NOTES & DETAILS	C-9
11	EROSION CONTROL (BMP) PLAN	C-10
12	DIMENSION PLAN	C-11

APPROVED BY:

CHAIRMAN, HAWAIIAN HOMES COMMISSION STATE OF HAWAII	DATE: 1/26/16
MANAGER, CHIEF-ENGINEER, DEPARTMENT OF WATER SUPPLY COUNTY OF HAWAII	DATE:
DIRECTOR, DEPARTMENT OF ENVIRONMENTAL MANAGEMENT COUNTY OF HAWAII	DATE:
DIRECTOR, PLANNING DEPARTMENT COUNTY OF HAWAII FOR GRADING PURPOSES ONLY;	DATE:
DIRECTOR, DEPARTMENT OF PUBLIC WORKS COUNTY OF HAWAII	DATE:

No.	DATE	DWG.	CHK.	REVISIONS
1				
2				
3				

PRINTS TO
DATE

This work was prepared by me or under my supervision and construction of this project will be under my observation.
Exp. 04-30-16
Wesley R. Segawa & Associates, Inc.
DENNIS K.W. LEE LICENSED PROFESSIONAL ENGINEER No. 4004-C HAWAII U.S.A.

WRSA
Wesley R. Segawa and Associates, Inc.
Committed to Quality Performance & Value
Civil & Structural Engineers
101 Silva Street, Suite 201 Hilo, Hawaii 96720-4755
Telephone: (808) 935-4677 Fax: (808) 935-2070

Project Title: KEAUKAHA TRACT 1 IMPROVEMENTS
LOTS 63-A & 63-B
Sheet Title: TITLE SHEET

DESIGN BY:	DRB
DRAWN BY:	DRB
CHECKED BY:	DL
APPROVED BY:	DL
DATE:	NOV. 2015
SCALE:	AS NOTED
FILE No.	W1406.80

DRAWING No. T-1

SHEET No. 1 OF 12 SHTS.

GRADING NOTES:

1. ALL GRADING WORK SHALL CONFORM TO CHAPTER 10 OF THE HAWAII COUNTY CODE. SHOULD A GRADING PERMIT BE REQUIRED, NO WORK SHALL COMMENCE UNTIL THE DEPARTMENT OF PUBLIC WORKS (DPW) APPROVES A GRADING PERMIT.

2. THE CONTRACTOR SHALL REMOVE ALL SILT AND DEBRIS DEPOSITED IN DRAINAGE FACILITIES, ROADWAYS AND OTHER AREAS RESULTING FROM HIS WORK. THE COSTS INCURRED FOR ANY NECESSARY REMEDIAL ACTION BY THE DPW, SHALL BE PAYABLE BY THE CONTRACTOR.

3. THE CONTRACTOR, AT HIS OWN EXPENSE, SHALL KEEP THE PROJECT AND SURROUNDING AREAS FREE FROM DUST NUISANCES. THE WORK SHALL BE IN CONFORMANCE WITH THE AIR POLLUTION CONTROL RULES OF THE STATE DEPARTMENT OF HEALTH, HAR 11-60.1, and FUGITIVE DUST.

4. ALL GRADING OPERATIONS SHALL BE PERFORMED IN CONFORMANCE WITH THE APPLICABLE PROVISIONS OF THE HAWAII ADMINISTRATIVE RULES, TITLE 11, CHAPTER 55, WATER POLLUTION CONTROL AND CHAPTER 54, WATER QUALITY STANDARDS, AND TO THE EROSION AND SEDIMENTATION CONTROL STANDARDS AND GUIDELINES OF THE DEPARTMENT OF PUBLIC WORKS, COUNTY OF HAWAII.

5. THE CONTRACTOR SHALL SOD OR PLANT ALL SLOPES AND EXPOSED AREAS IMMEDIATELY AFTER THE GRADING WORK HAS BEEN COMPLETED.

6. FILLS ON SLOPES STEEPER THAN 5:1 SHALL BE KEYED.

7. THE CONTRACTOR SHALL INFORM THE DPW OF THE LOCATION OF THE DISPOSAL AND/OR BORROW SITE(S) REQUIRED FOR THIS PROJECT WHEN AN APPLICATION FOR A GRADING PERMIT IS MADE. THE DISPOSAL AND/OR BORROW SITE(S) MUST ALSO FULFILL THE REQUIREMENTS OF THE GRADING ORDINANCE.

8. NO GRADING WORK SHALL BE DONE ON SATURDAYS, SUNDAYS, AND HOLIDAYS ANYTIME WITHOUT PRIOR APPROVAL FROM THE ENGINEER. GRADING WORK ON NORMAL WORKING DAYS SHALL BETWEEN THE HOURS OF 7:00 A.M. TO 3:00 P.M.

9. FILLS SHALL BE COMPACTED TO 90 PERCENT (90%) OF MAXIMUM DENSITY PER ASTM D-1557 TEST.

10. THE CONTRACTOR SHALL REMOVE ALL VEGETATION BEFORE PLACING FILLS ON NATURAL GROUND SURFACE.

    ESTIMATED EARTHWORK QUANTITIES:

    TOTAL EXCAVATION: 0 CU. YDS.
    TOTAL EMBANKMENT: 850 CU. YDS.

11. THE QUANTITIES SHOWN ARE FOR GRADING PERMIT PURPOSES ONLY. THE CONTRACTOR SHALL BE RESPONSIBLE FOR DETERMINING THE EXACT QUANTITIES FOR BIDDING PURPOSES.

EARTHWORK QUANTITIES SHOWN WERE TAKEN FROM EXISTING GROUND TO FINISH GRADE.

TOTAL AREA TO BE GRADED 0.22 ACRES

SOLID WASTE CONSTRUCTION NOTES:

1. UNLESS OTHERWISE SPECIFIED, THE CONTRACTOR IS RESPONSIBLE FOR THE PROPER HANDLING, STORAGE AND/OR DISPOSAL OF ALL WASTE GENERATED BY THIS CONSTRUCTION INCLUDING GRUBBING AND EXCESS EXCAVATED MATERIAL. ANY MATERIAL BROUGHT TO THE COUNTY LANDFILLS WILL BE SUBJECTED TO THE INSTITUTED TIPPING FEE SYSTEM, WITH NO EXCEPTIONS OR EXEMPTIONS

2. ALL WASTES GENERATED BY CONSTRUCTION, INCLUDING GRUBBING, DEMOLITION AND EXCESS EXCAVATION MATERIAL MAY BE BROUGHT TO THE WEST HAWAII OR THE HILO LANDFILL. THE CONTRACTOR SHALL CHECK WITH THE SOLID WASTE DIVISION FOR DISCLOSURE OF THE CURRENT LANDFILL FEE AND CONSIDERATION OF THAT FEE SHALL BE INCLUDED IN THE CONTRACTOR'S BID SUM.

3. CONSTRUCTION, DEMOLITION AND GRUBBING MATERIAL SHALL NOT BE DEPOSITED AT ANY OF THE COUNTY TRANSFER STATIONS, BUT SHALL BE TRANSPORTED FOR DISPOSAL AT EITHER THE WEST HAWAII OR HILO LANDFILL.

4. ASBESTOS MATERIAL MUST BE SEPARATED, DOUBLE BAGGED AND LANDFILLED IN ACCORDANCE WITH REGULATIONS OF THE SOLID WASTE DIVISION, DEPARTMENT OF ENVIRONMENTAL MANAGEMENT. INFORMATION MAY BE OBTAINED BY CALLING THE DIVISION AT (808) 961-8339 BETWEEN 7:00 AM AND 4:00 PM MONDAY THROUGH FRIDAY.

5. ALL GREEN WASTE GENERATED FROM GRUBBING WORK, SHALL BE SEPARATED AND DEPOSITED AT THE GREEN WASTE AREA AT THE HILO OR WEST HAWAII DISPOSAL SITE. (NOTE: NO TREATED LUMBER IS ALLOWED IN THE GREEN WASTE)

6. RECYCLE AS MUCH OF THE SOLID WASTE MATERIAL GENERATED BY THIS CONSTRUCTION AS POSSIBLE. EXCESS MATERIAL SHALL BE DISPOSED OF PROPERLY.

7. CONTRACTOR SHALL SUBMIT A REPORT PRIOR TO THE COMMENCEMENT OF WORK, PER SOLID WASTE DEMOLITION PLAN GUIDELINES, AS AMMENDED. AVAILABLE AT THE COUNTY OF HAWAII, DEPARTMENT OF ENVIRONMENTAL MANAGEMENT OFFICE.

NOTES FOR WORK WITHIN THE ROAD-OF-WAY

1. THE CONTRACTOR SHALL VERIFY THE LOCATION OF ALL EXISTING UTILITIES, WHETHER SHOWN ON THE PLAN OR NOT, AND SHALL BE RESPONSIBLE FOR THE REPAIR OR REPLACEMENT OF SAME IN THE EVENT OF DAMAGES DUE TO HIS CONSTRUCTION PARACTICES. THE CONTRACTOR SHALL COORDINATE HIS WORK WITH THE RESPECTIVE UTILITY COMPANIES.

2. THE CONTRACTOR SHALL PROVIDE AND INSTALL ALL TRAFFIC CONTROL DEVICES IN CONFORMANCE WITH THE CURRENT EDITION OF THE "MANUAL ON UNIFORM TRAFFIC CONTROL DEVICES FOR STREETS AND HIGHWAYS," AND AS DIRECTED BY THE ENGINEER.

3. THE PROPOSED UTILITY LINE LOCATION SHALL BE LAID OUT IN THE FIELD PRIOR TO THE CONDUCTING OF THE FIELD REVIEW BY THE ENGINEER.

4. FIELD ADJUSTMENTS SHALL BE MADE AS DIRECTED BY THE ENGINEER PRIOR TO THE COMMENCEMENT OF ANY UTILITY LINE WORK.

5. THE CONTRACTOR SHALL PROVIDE AT LEASE ONE (1) LANE FOR TRAFFIC MOVEMENT AT ALL TIMES. TWO (2) LANES FOR TRAFFIC MOVEMENT SHALL BE PROVIDED BETWEEN THE HOURS OF 3:00 P.M. TO 8:00 A.M.

6. THE EXISTING PAVEMENT SHALL BE SAW-CUT BEFORE COMMENCEMENT OF TRENCHING WORK.

7. ANY PAVEMENT OUTSIDE THE CONTRACT ZONE LIMITS DAMAGED AS A RESULT OF CONSTRUCTION OPERATIONS SHALL BE RESTORED TO ITS ORIGINAL CONDITION, OR BETTER, AS DIRECTED BY THE ENGINEER.

8. A TEMPORARY COLD MIX PATCH SHALL BE APPLIED IMMEDIATELY UPON COMPLETION OF THE BACKFILLING OPERATION AND SHALL BE MAINTAINED BY THE CONTRACTOR UNTIL A PERMANENT PATCH IS AUTHORIZED BY THE ENGINEER.

9. NO MATERIAL, EXCEPT THE TRENCH EXCAVATED MATERIAL, SHALL BE STOCKPILED CLOSER THAN SIX (6) FEET FROM THE EXISTING EDGE OF PAVEMENT.

10. NO CONSTRUCTION EQUIPMENT SHALL BE PARKED WITHIN THE ROAD RIGHT-OF-WAY IN SUCH A MANNER THAT THE EQUIPMENT WILL OBSTRUCT THE NORMAL MOVEMENT AND SIGHT DISTANCE OF THE DRIVING MOTORIST, EXCEPT DURING ACTUAL WORKING HOURS.

11. EXCEPT DURING ACTUAL WORKING HOURS, ALL SIGNS THAT DO NOT PERTAIN TO THE CONSTRUCTION ACTIVITY, SUCH AS "MEN WORKING" AND "FLAGMAN AHEAD" SHALL BE COVERED OR LAID DOWN. HOWEVER, ALL SIGNS NECESSARY FOR THE SAFETY OF THE PUBLIC SHALL BE MAINTAINED.

12. ANY PAVEMENT MARKINGS, STRUCTURES, AND APPURTENANCES (WITHIN OR OUTSIDE OF THE CONTRACT ZONE LIMITS) DAMAGED AND/OR WORN AWAY UNDER THE PERMIT SHALL BE REPAINTED OR RECONSTRUCTED AS DIRECTED BY THE ENGINEER.

13. NO TRENCHING SHALL BE LEFT OPEN FOR MORE THAN FIVE (5) WORKING DAYS.

14. SHOULD TRENCING OCCUR THROUGH AN EXISTING SIDEWALK, OR SHOULD DAMAGES OCCUR TO THE SIDEWALK AS A RESULT OF ANY CONSTRUCTION WORK, THE FOLLOWING PROCEDURE SHALL BE UTILIZED TO REPAIR THE SIDEWALK:

    A. ALL PORTLAND CEMENT CONCRETE TO BE REMOVED SHALL FIRST BE CUT WITH A CONCRETE SAW THAT HAS A DIAMOND OR CARBORUNDUM ABRASIVE WHEEL. THOSE CUTS SHALL BE MADE TO A DEPTH EQUAL TO AT LEAST ONE-FOURTH OF THE DEPTH OF THE SLAB, OR ENOUGH AS IS DEEMED NECESSARY BY THE DEPARTMENT OF PUBLIC WORKS, TO PERMIT BREAKING OUT THE BALANCE OF THE CONCRETE WITHOUT SPALLING OFF THE EXPOSED EDGES OF THE SLAB LEFT IN PLACE.

    B. IF ANY CONCRETE BLOCK IS TOUCHED, THE WHOLE BLOCK SHALL BE REMOVED AND LATER REPLACED, UNLESS A MINOR VARIATION IS AUTHORIZED BY THE DPW OR IT'S REPRESENTATIVE.

    C. ANY DAMAGES TO ADJACENT AREAS DUE TO SETTLEMENT OR TO ANY OTHER EFFECTS WHATSOEVER CAUSED BY THE CONSTRUCTION WORK SHALL BE PROPERLY REPAIRED AND CORRECTED.

STRUCTURAL BEST MANAGEMENT PRACTICES (BMPS):

1. THE CONTRACTOR SHALL INSPECT EROSION AND SEDIMENT CONTROL MEASURES WEEKLY AND AFTER 0.5 INCHES OF RAINFALL.

2. IF REPAIRS TO OR MAINTENANCE OF THE CONTRACTOR'S EROSION CONTROL MEASURES ARE NECESSARY, THE CONTRACTOR SHALL INITIATE THE REPAIRS OR MAINTENANCE WITHIN TWENTY-FOUR (24) HOURS AFTER INSPECTION AND NOTING OF THE DEFICIENCY.

    REPAIRS AND MAINTENANCE MAY INCLUDE THE FOLLOWING:

    A. REPLACING GEO-JUTE FABRIC WHEN TEARS ARE FOUND, AND ENSURING THAT THE FABRIC IS SECURELY ATTACHED FIRMLY IN THE GROUND.

    B. RESTORING BARE SPOTS AND WASHOUTS, AND ENSURING HEALTY PLANT GROWTH IN BOTH TEMPORARY AND PERMANENT SEEDED AND PLANTED AREAS.

3. THE CONTRACTOR SHALL MAKE EVERY EFFORT TO INSTALL STRUCTURAL BMPS AS NEAR TO THE POLLUTANT SOURCE AS PRACTICABLE. INLET PROTECTION SHALL SERVE AS THE LAST MEASURE TO PREVENT POLLUTANTS FROM ENTERING THE STORM DRAIN SYSTEM.

4. THE CONTRACTOR SHALL BACKFILL TRENCHES AND PROVIDE COLD MIX PATCHES TO MATCH ADJOINING PAVEMENT GRADE AT THE END OF EACH WORK DAY.

5. STABILIZED CONSTRUCTION ENTRANCE:

    ALL POINTS OF EGRESS AND INGRESS TO A SITE SHALL BE PROTECTED WITH A STABILIZED CONSTRUCTION ENTRANCE, 20' X 20' X 8" THICK CRUSHED ROCK LAYER OVER A GEOTEXTILE FABRIC BASE IN THE LOCATION(S) SHOWN ON THE EROSION CONTROL PLAN.

6. DUST CONTROL:

    DUST CONTROL, INCLUDING DUST BARRIERS, WATERING, ETC., SHOULD BE APPLIED TO REDUCE DUST EMISSIONS. THE CONTRACTOR, AT HIS OWN EXPENSE, SHALL KEEP THE PROJECT AREA AND SURROUNDING AREA FREE FROM DUST NUISANCE. THE WORK SHALL BE IN CONFORMANCE WITH THE AIR POLLUTION CONTROL STANDARDS CONTAINED IN HAWAII ADMINISTRATIVE RULES: CHAPTER 11-60, "AIR POLLUTION CONTROL",

7. SEDIMENT BARRIERS OR TRAPS:

    SEDIMENT TRAPPING DEVICES SUCH AS FENCES, TRAPS, BASINS OR BARRIERS SHALL BE USED DOWN SLOPE OF ALL DISTURBED AREAS AND AROUND THE BASE OF ALL MATERIAL STOCKPILES.

8. INLET PROTECTION:

    ALL STORM DRAIN INLETS ON SITE, AND THOSE OFFSITE WHICH MAY RECEIVE RUNOFF FROM THE SITE SHALL USE AN INLET PROTECTION DEVICE.

9. PERMANENT STABILIZATION:

    ALL DISTURBED AREAS SHALL BE PERMANENTLY STABILIZED PRIOR TO REMOVING EROSION AND SEDIMENT MEASURES. ALL TEMPORARY EROSION AND SEDIMENT CONTROL MEASURES SHALL BE REMOVED WITHIN 30 DAYS AFTER FINAL SITE STABILIZATION OR AFTER THE TEMPORARY MEASURES ARE NO LONGER NEEDED. TRAPPED SEDIMENT AND AREAS OF DISTURBED SOIL WHICH RESULT FROM THE REMOVAL OF THE TEMPORARY MEASURES SHALL BE IMMEDIATELY PERMANENTLY STABILIZED.

LEGEND:

A.C.	ASPHALT CONCRETE	NIC	NOT IN CONTRACT
ARV	AIR RELEASE VALVE	OH	OVERHEAD
BOT.	BOTTOM	PAV'T	PAVEMENT
BW	BOTTOM WALL	PE	PAD ELEVATION
C.O.	CLEAN OUT	S	SEWER OR SPREAD
COCN.	CONCRETE	SDMH	STORM DRAIN MANHOLE
CRM	CONCRETE RUBBLE MASONARY	SMH	SEWER MANHOLE
D	DIAMETER OR DRAIN	SS	SANITARY SEWER
E/ELEC.	ELECTRIC	ST.	STREET
ELEV./E	ELEVATION	STA.	STATION
FFE	FINISH FLOOR ELEVATION	TB	TOP OF BOX
F.H.	FIRE HYDRANT	TG	TOP OF GRATE
G.P.	GUARD POST/GUY POLE/GATE POST	TP	TOP PIPE
H	HEIGHT	TS	TOP STEM
IG	INVERT GRADE	TV	TOP VALVE
INV.	INVERT	TW	TOP WALL
M.B.	MAIL BOX	U.P.	UTILITY POLE
MH	MANHOLE	U.P./S.L.	UTILITY POLE W/STREET LIGHT
MON	MONUMENT	W	WATER
		WM	WATER METER
		WMH	WATER MANHOLE
		WV	WATER VALVE BOX

No.	DATE	DWG. CHK.	REVISIONS
1			
2			
3			

PRINTS TO DATE

This work was prepared by me or under my supervision and construction of this project will be under my observation. Exp. 04-30-16

Wesley R. Segawa & Associates, Inc.

DENNIS K.W. LEE LICENSED PROFESSIONAL ENGINEER No. 4004-C HAWAII U.S.A.

WRSA
Wesley R. Segawa and Associates, Inc.
Committed to Quality Performance & Value
Civil & Structural Engineers
101 Silva Street, Suite 201 Hilo, Hawaii 96720-4755
Telephone: (808) 935-4677 Fax: (808) 935-2070

Project Title: KEAUKAHA TRACT 1 IMPROVEMENTS LOTS 63-A & 63-B

Sheet Title: MISCELLANEOUS NOTES

DESIGN BY:	DRB
DRAWN BY:	DRB
CHECKED BY:	DL
APPROVED BY:	DL
DATE:	NOV. 2015
SCALE:	AS NOTED
FILE No.	W1406.80

DRAWING No. C-1

SHEET No. 2 OF 12 SHTS.

UTILITY POLE SPECIFICATIONS AND NOTES:

MAXIMUM-200 AMP SERVICE

IT SHALL BE THE CUSTOMER'S RESPONSIBILITY FOR COMPLIANCE WITH THE NATIONAL ELECTRICAL CODE AND ANY GOVERNING AUTHORITY FOR ALL EQUIPMENT BEYOND THE POINT OF CONNECTION. THE CUSTOMER IS ADVISED TO USE THE SERVICES OF A QUALIFIED ELECTRICIAN TO ASSURE COMPLIANCE WITH ALL CODES AND REGULATIONS.

1. DESCRIPTION:

   PERMANENT - MOBILE HOMES, CAMPS, WATER WELLS, AND ANY OTHER CONNECTION NOT CONSIDERED TEMPORARY.

   TEMPORARY - CONSTRUCTION, SPECIAL EVENTS, ETC.

2. METER POLES ARE FURNISHED AND INSTALLED BY CUSTOMER. SPECIFICATIONS SHOWN ON THE DRAWING AND DESCRIBED HERE SHALL BE CONSIDERED MINIMUM REQUIREMENTS.

3. PERMANENT METER POLES MUST BE 20' (FEET) IN LENGTH AND BE SET 5' (FEET) DEEP. A PERMANENT METER POLE MUST BE A TREATED ROUND POLE WITH A MINIMUM TOP DIAMETER OF 5" (INCHES) OR A TREATED 6" X 6" (INCH) POLE.

   IT WILL BE THE RESPONSIBILITY OF THE CUSTOMER TO SECURE THE POLE IN A VERTICAL POSITION. IF THE GROUND IS NOT ADEQUATE TO SUPPORT THE POLE, A GUY WILL HAVE TO BE INSTALLED BY THE CUSTOMER.

4. TEMPORARY METER POLES MUST BE 16' (FEET) IN LENGTH AND BE SET 4' (FEET) DEEP. A TEMPORARY METER POLE MUST BE A TREATED POLE WITH A MINIMUM SIZE OF 4" X 6" (INCHES). A TEMPORARY METER POLE WITH A SERVICE LENGTH OF 75' (FEET) OR GREATER MUST BE BRACED AS SHOWN ON THE TEMPORARY METER POLE DRAWING.

5. SERVICE ENTRANCE CONDUIT FURNISHED AND INSTALLED BY CUSTOMER. SERVICE ENTRANCE CONDUIT SHALL BE SCHEDULE 40 PVC OR RIGID CONDUIT, NO EMT, AND SHALL BE SIZED IN ACCORDANCE WITH THE NATIONAL ELECTRICAL CODE OR GOVERNING AUTHORITY. A MINIMUM OF 3 CONDUIT STRAPS ARE REQUIRED, WITH ONE (1) STRAP BEING NO MORE THAN 12" (INCHES) FROM THE WEATHER HEAD.

6. SERVICE ENTRANCE CONDUCTORS FROM THE POINT OF CONNECTION TO METER BASE, TO THE MAIN DISCONNECT, FURNISHED AND INSTALLED BY CUSTOMER.

   SERVICE ENTRANCE CONDUCTORS SHALL BE COPPER ONLY AND SIZED ACCORDING TO LOAD, AS REQUIRED BY THE NATIONAL ELECTRIC CODE OR GOVERNING AUTHORITY.

   THE NEUTRAL OF THE SERVICE ENTRANCE CONDUCTORS CAN BE TWO (2) SIZES SMALLER THAN THE OTHER CONDUCTORS AND SHALL BE IDENTIFIED WITH GRAY AND WHITE TAPE AT THE WEATHER HEAD AND IN THE METER BASE. AN EXTENSION OF 18" (INCHES) OF SERVICE CONDUCTOR IS REQUIRED AT THE WEATHER HEAD.

7. MAIN DISCONNECT, EITHER A SINGLE MAIN OR A MAIN IN A DISTRIBUTION PANEL, FURNISHED AND INSTALLED BY CUSTOMER. MAIN DISCONNECT SHALL BE SIZED ACCORDING TO LOAD, AS REQUIRED BY THE NATIONAL ELECTRICAL CODE OR GOVERNING AUTHORITY.

   MAIN DISCONNECTS AND ANY OTHER ELECTRICAL EQUIPMENT THAT IS EXPOSED TO THE ELEMENTS MUST BE OF A WEATHERPROOF AND WATER TIGHT DESIGN.

8. METER BASE AND K-10 SERVICE HOLDER TO BE FURNISHED AND INSTALLED BY CUSTOMER. THEY MUST CONFORM TO HELCO STANDARDS AND BE COMPATIBLE WITH HELCO METERING. THE METER BASE SHALL BE MOUNTED BETWEEN 5' AND 6' (FEET) ABOVE FINISHED GRADE. THE K10C SHALL BE MOUNTED 8' (INCHES) FROM THE TOP OF THE METER POLE IN THE DIRECTION OF HELCO'S SERVICE CABLE. PRE-DRILLING A PILOT HOLE FOR THE K10C IS RECOMMENDED.

9. A METER BASE GROUND SHALL EXTEND FROM THE NEUTRAL OR GROUNDING LUG IN THE METER BASE TO GROUND ROD. THE METER BASE GROUND SHALL BE A MINIMUM #6, SOFT DRAWN COPPER WIRE. THE METER BASE GROUND WIRE MUST BE CONNECTED IN THE GROUND WIRE LUG, WHERE PROVIDED, AND NOT IN THE SERVICE NEUTRAL LUG. THE METER BASE GROUND WIRE MUST BE STAPLED EVERY SIX (6) INCHES.

10. THE POLE GROUNDING CONDUCTOR SHALL BE A MINIMUM #6, BARE, SOFT DRAWN COPPER WIRE AND EXTEND FROM 6" (INCHES) ABOVE THE TOP OF THE METER POLE TO THE GROUND ROD. IT IS INSTALLED 90 AROUND THE POLE TO THE GROUND ROD. IT IS INSTALLED 90 AROUND THE POLE FROM THE SERVICE ENTRANCE CONDUIT. THE POLE GROUNDING CONDUCTOR MUST BE STAPLED, STARTING FROM THE TOP OF THE POLE AT 2' (FOOT) INTERVALS UNTIL A POINT 6' (FEET) ABOVE THE GROUND IS REACHED, THEN STAPLED EVERY 6" (INCHES).

11. GROUND RODS SHALL BE 5/8" X 8" COPPER WELD OR 1/2" X 8' COPPER. PERMANENT METER POLE GROUND RODS SHALL BE SET 1" (INCH) BELOW FINISHED GRADE.

    TEMPORARY METER POLE GROUND RODS CAN BE SET 4" (INCHES) ABOVE FINISHED GRADE.

12. ALL UNUSED OR OPEN HOLES IN THE METER BASE, MAIN DISCONNECTOR DISTRIBUSTION PANEL SHALL BE PLUGGED WITH WATERTIGHT PLUGS.

13. INSPECTION: IF A GOVERNING AUTHORITY REQUIRES INSPECTION, INSPECTION TAG MUST BE IN PLACE AND MARKED APPROVED BEFORE HELCO WILL CONNECT SERVICE.

No.	DATE	DWG.	CHK.	REVISIONS
1				
2				
3				

PRINTS TO

No.	DATE

This work was prepared by me or under my supervision and to the best of my knowledge, all this project will be under my observation.
Exp. 04-30-16

Wesley R. Segawa & Associates, Inc.

DENNIS K.W. LEE LICENSED PROFESSIONAL ENGINEER No. 4004-C HAWAII U.S.A.

WRSA
Wesley R. Segawa and Associates, Inc.
Committed to Quality Performance & Value
Civil & Structural Engineers
101 Silva Street, Suite 201 Hilo, Hawaii 96720-4795
Telephone: (808) 935-4677 Fax: (808) 935-2070

Project Title: KEAUKAHA TRACT 1 IMPROVEMENTS
LOTS 63-A & 63-B

Sheet Title: MISCELLANEOUS NOTES

DESIGN BY:	DRB
DRAWN BY:	DRB
CHECKED BY:	DL
APPROVED BY:	DL
DATE:	NOV. 2015
SCALE:	AS NOTED
FILE No.	W1406.80

DRAWING No. C-2

SHEET No. 3 OF 12 SHTS.

WATERLINE NOTES:

1. ALL WORK SHALL BE DONE ACCORDING TO THE WATER SYSTEM STANDARDS, STATE OF HAWAII, DATED 2002, AS AMENDED.
2. ALL EXISTING WATERLINES, WATERLINE, APPURTENANCES AND OTHER UTILITY LOCATIONS SHOWN ON THE PLANS ARE OBTAINED FROM THE LATEST RELIABLE SOURCES. THE CONTRACTOR SHALL BE RESPONSIBLE TO VERITY THE EXACT LOCATION OF ALL UTILITIES IN THE FIELD AND SHALL BEAR ALL COSTS FOR DAMAGE DONE DURING THE CONTRACT PERIOD.
3. THE CONTRACTOR SHALL INFORM THE D.W.S. ENGINEER 72 HOURS PRIOR TO THE BEGINNING OF ANY WATERLINE WORK AND TWO WEEKS PRIOR TO ANY CONNECTION, CHLORINATION, SHUT-OFF OR RELOCATION WORK.
4. ALL CONNECTIONS TO THE WATER SYSTEMS SHALL BE DONE BY THE D.W.S. THE CONTRACTOR SHALL PERFORM ALL EXCAVATION, BACKFILL, ROAD REPAIR, TRAFFIC CONTROL, AND PROVIDE EQUIPMENT AND MATERIALS NECESSARY TO COMPLETE THE CONNECTION.
5. THE CONTRACTOR SHALL PAY FOR ALL WORK, EQUIPMENT, AND MATERIAL FURNISHED BY THE D.W.S.
6. MINIMUM VERTICAL CLEARANCE BETWEEN WATERLINES AND OTHER UTILITIES SHALL BE 12-INCHES PROVIDED THE OTHER UTILITY IS CONCRETE JACKETED, AND 18-INCHES IF NO CONCRETE JACKETS ARE USED. IN ALL APPLICABLE INSTANCES, THE WATERLINES SHALL BE AT A GRADE HIGHER THAN OTHER UTILITIES. UTILIZE PERPENDICULAR CROSSINGS WHERE PRACTICABLE FOR WATERLINES, CENTER FULL PIPE LENGTHS AT UTILITY CROSSINGS WHENEVER POSSIBLE
7. MINIMUM HORIZONTAL CLEARANCE BETWEEN WATERLINES AND OTHER UTILITIES SHALL BE 8-FEET (CLEAR SPACE – NOT CENTERLINE TO CENTERLINE) FOR ROAD RIGHT-OF-WAYS OF 50 FEET OF LESS, AND 10-FEET FOR ROAD RIGHT-OF-WAYS OF MORE THAN 50 FEET.
8. ALL WATER SYSTEM PIPELINES, 4-INCHES OR LARGER IN DIAMETER, SHALL BE DUCTILE IRON, PUSH ON JOINTS, CLASS 52, AND ALL PIPELINES SMALLER THAN 4-INCHES IN DIAMETER SHALL BE SOFT COPPER, TYPE "K:, UNLESS OTHERWISE SPECIFIED.
9. PIPE CUSHION FOR COPPER SERVICE LATERALS SHALL BE NO. 4 MANUFACTURED FINE SAND.
10. METER BOXES FOR 5/8-INCH METERS PLACED OUTSIDE OF PAYMENT TO BE TYPE "B" PER STD DETAILS M1 & M2. METER BOXES FOR 1-INCH METERS OR FOR 5/8-INCH STD DETAIL M3.
11. RELOCATION OF EXISTING METERS SHALL BE DONE UNDER D.W.S. SUPERVISION. RELOCATION OF CUSTOMER SERVICE LINES TO RELOCATED METERS SHALL BE COPPER (TYPE "K") AND DONE BY THE CONTRACTOR. ALL WORK AND MATERIALS SHALL BE PROVIDED BY THE CONTRACTOR AND CONSIDERED INCIDENTAL TO THE RELOCATION WORK. EXISTING METER BOXES DAMAGED BY THE CONTRACTOR SHALL BE REPLACED AT THE CONTRACTOR'S COST. WHEN APPLICABLE, A DIELECTRIC UNION SHALL BE USED TO CONNECT THE COPPER PIPE TO THE CUSTOMER'S GALVANIZED IRON (G.I.) PIPE.
12. SOLDER (1/8-INCH DIA.) AND FLUX USED SHALL NOT CONTAIN MORE THAN 0.2% LEAD
13. LOTS REQUIRING A DEPARTMENT OF WATER SUPPLY APPROVED BACKFLOW PREVENTION ASSEMBLY SHALL HAVE ONE. IT MUST BE INSTALLED ON PRIVATE PROPERTY IN ACCORDANCE WITH D.W.S. STANDARD DETAIL NO. V9 AND DEPARTMENTAL STAFF MUST APPROVE THE INSTALLATION BEFORE WATER SERVICE CAN BE STARTED.
14. WHERE WATER SHUT-OFF OF MORE THAN 3 HOURS BECOMES NECESSARY, THE CONTRACTOR, AT HIS OWN EXPENSE, SHALL PROVIDE A TEMPORARARY BY-PASS LINE. THE DWS ENGINEER SHALL DETERMINE THE BY-PASS LINE SIZE. IF NECESSARY, THE DWS ENGINEER MAY REQUIRE A BY-PASS LINE, REGARDLESS OF THE EXPECTED SHUT-OFF PERIOD.
15. THE CONTRACTOR SHALL BE RESPONSIBLE FOR RECORD DRAWINGS (AS-BUILT DRAWINGS) AND THE LICENSED ENGINEER SHALL CERTIFY THE DRAWINGS AS TO ACCURACY AND SUBMIT THE DRAWINGS AND AS-BUILT TRACINGS TO THE DWS.
16. AFTER JANUARY 4, 2014, ALL BRASS PRODUCTS MUST CONFORM TO NSF STANDARD 61 AND NSF STANDARD 372 OF THE SDWA, AND BE CERTIFIED AS "LEAD-FREE" BY THE MANUFACTURER. "LEAD-FREE" IS DEFINED AS THE ALLOWABLE LEAD CONTENT OF NOT MORE THAN 0.25% IN THE WETTED SURFACE. CERTIFICATION FROM THE MANUFACTURER MUST BE SUBMITTED TO THE DEPARTMENT OF WATER SUPPLY FOR REVIEW AND APPROVAL PRIOR TO INSTALLATION. ANY BRASS PRODUCT INSTALLED WITHOUT APPROVAL MUST BE REMOVED AT NO EXPENSE TO THE DEPARTMENT.
17. BOXED WATERLINE DETAILS BELOW TAKEN FROM THE WATER SYSTEM STANDARDS.

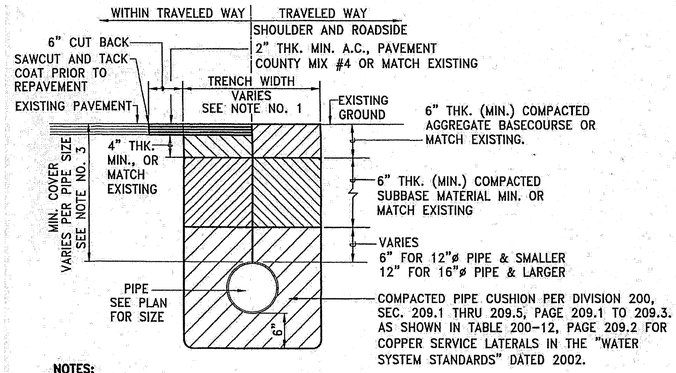

NOTES:
1. SEE TABLE 300-1, PAGE 302-3, WATER SYSTEM STANDARDS, 2002.
2. LOCAL MATERIAL MAY BE USED OUTSIDE SHOULDER AREA.
3. SEE TABLE 100-3, PAGE 102.4, WATER SYSTEM STANDARDS, 2002.
4. DRIVEWAY RESTORATION
   - A. WHERE EXISTING DRIVEWAY IS CONCRETE, 4" THK. CONCRETE REINFORCED WITH 6 X 6 X 10/10 WWM ON 4" THK. BASECOURSE SHALL BE USED IN LIEU OF THE ABOVE SECTION.
   - B. WHERE AN EXISTING DRIVEWAY IS UNPAVED, THE DRIVEWAY SHALL BE RESTORED TO A CONDITION EQUAL TO OR BETTER THAN THE EXISTING DRIVEWAY.
   - C. WHERE EXISTING DRIVEWAY IS PAVED, THE DRIVEWAY SHALL BE RESTORED AS SHOWN ABOVE
   - D. CONTRACTOR SHALL NOTIFY THE OWNER OF THE DRIVEWAY 48 HOURS BEFORE COMMENCEMENT OF ANY WORKS

1 / C-3 TYPICAL TRENCH AND PAVEMENT REPAIR SECTION FOR WATERLINES
NOT TO SCALE

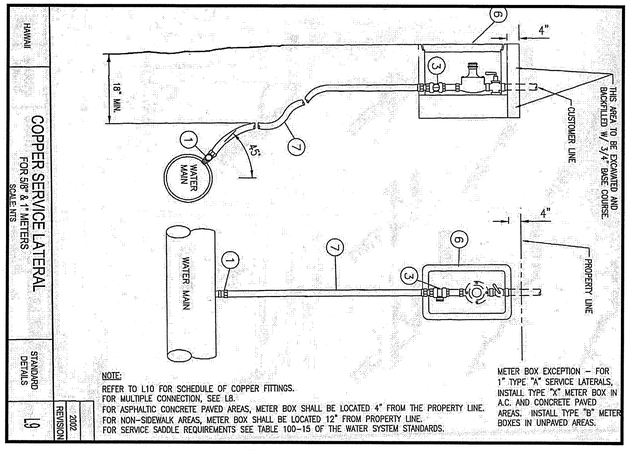

2 / C-3 TYPICAL SINGLE SERVICE LATERAL
NOT TO SCALE

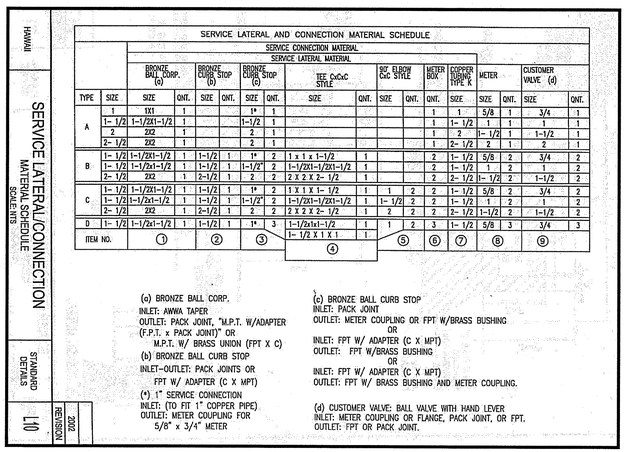

SERVICE LATERAL AND CONNECTION MATERIAL SCHEDULE

		SERVICE CONNECTION MATERIAL																			
		SERVICE LATERAL MATERIAL																			
		BRONZE BALL CORP. (a)		BRONZE CURB STOP (b)		BRONZE CURB STOP (c)		TEE CxCxC STYLE			90° ELBOW CxC STYLE			METER BOX	COPPER TUBING TYPE K		METER		CUSTOMER VALVE (d)	
TYPE	SIZE	SIZE	QNT.	SIZE	QNT.	SIZE	QNT.	SIZE	QNT.		SIZE	QNT.		QNT.	SIZE	SIZE	QNT.	SIZE	QNT.
A	1	1X1	1			1"	1							1	1	5/8	1	3/4	1
	1- 1/2	1-1/2X1-1/2	1			1-1/2	1							1	1- 1/2	1	1	1	1
	2	2X2	1			2	1							1	2	1- 1/2	1	1-1/2	1
	2- 1/2	2X2	1			2	1							1	2- 1/2	2	1	2	1
B	1- 1/2	1-1/2X1-1/2	1	1-1/2	1	1"	2	1 x 1 x 1-1/2	1					2	1- 1/2	5/8	2	3/4	2
	1- 1/2	1-1/2x1-1/2	1	1-1/2	1	1-1/2"	2	1-1/2X1-1/2X1-1/2	1					2	1- 1/2	1	2	1	2
	2- 1/2	2X2	1	2-1/2	1	2	2	2 X 2 X 2- 1/2	1					2	2- 1/2	1- 1/2	2	1-1/2	2
C	1- 1/2	1-1/2X1-1/2	1	1-1/2	1	1"	2	1 X 1 X 1- 1/2	1	1	2	2	1- 1/2	5/8	2	3/4	2		
	1- 1/2	1-1/2x1-1/2	1	1-1/2	1	1-1/2"	2	1-1/2X1-1/2X1-1/2	1	1- 1/2	2	2	1- 1/2	1	2	1	2		
	2- 1/2	2X2	1	2-1/2	1	2	2	2 X 2 X 2- 1/2	1	2	2	2	2- 1/2	1-1/2	2	1-1/2	2		
D	1- 1/2	1-1/2x1-1/2	1	1-1/2	1	1"	3	1-1/2x1x1-1/2	1	1	2	3	1- 1/2	5/8	3	3/4	3		
								1- 1/2 X 1 X 1	1										
ITEM NO.		①		②		③		④		⑤			⑥	⑦		⑧		⑨	

(a) BRONZE BALL CORP.
INLET: AWWA TAPER
OUTLET: PACK JOINT, "M.P.T. W/ADAPTER (F.P.T. x PACK JOINT)" OR M.P.T. W/ BRASS UNION (FPT X C)

(b) BRONZE BALL CURB STOP
INLET-OUTLET: PACK JOINTS OR FPT W/ ADAPTER (C X MPT)
(*) 1" SERVICE CONNECTION
INLET: (TO FIT 1" COPPER PIPE)
OUTLET: METER COUPLING FOR 5/8" x 3/4" METER

(c) BRONZE BALL CURB STOP
INLET: PACK JOINT
OUTLET: METER COUPLING OR FPT W/BRASS BUSHING
OR
INLET: FPT W/ ADAPTER (C X MPT)
OUTLET: FPT W/BRASS BUSHING
OR
INLET: FPT W/ ADAPTER (C X MPT)
OUTLET: FPT W/ BRASS BUSHING AND METER COUPLING.

(d) CUSTOMER VALVE: BALL VALVE WITH HAND LEVER
INLET: METER COUPLING OR FLANGE, PACK JOINT, OR FPT.
OUTLET: FPT OR PACK JOINT.

3 / C-3 SCHEDULE OF COPPER FITTINGS
NOT TO SCALE

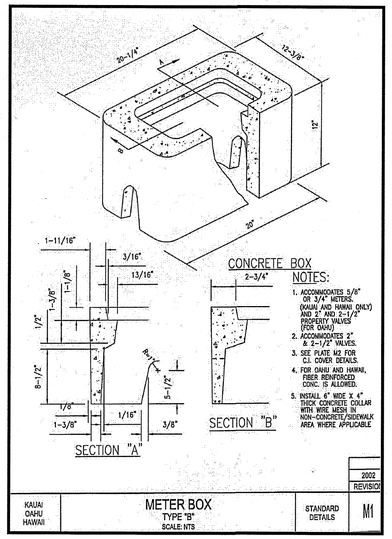

4 / C-3 METER BOX TYPE "B"
NOT TO SCALE

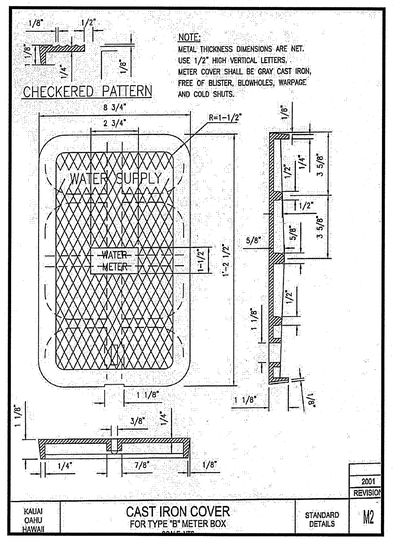

5 / C-3 CAST IRON COVER FOR TYPE "B" METER BOX
NOT TO SCALE

No.	DATE	DWG. CHK.	REVISIONS

PRINTS TO DATE

This work was prepared by me or under my supervision and construction of this project will be under my observation. Exp. 04-30-16

Wesley R. Segawa & Associates, Inc.

DENNIS K.W. LEE LICENSED PROFESSIONAL ENGINEER No. 4004-C HAWAII USA

WRSA
Wesley R. Segawa and Associates, Inc.
Civil & Structural Engineers
Committed to Quality Performance & Value
101 Silva Street, Suite 201 Hilo, Hawaii 96720-4755
Telephone: (808) 935-4677 Fax: (808) 935-2070

Project Title: KEAUKAHA TRACT 1 IMPROVEMENTS LOTS 63-A & 63-B

Sheet Title: WATER NOTES & DETAILS

DESIGN BY:	DRB
DRAWN BY:	DRB
CHECKED BY:	DL
APPROVED BY:	DL
DATE:	NOV. 2015
SCALE:	AS NOTED
FILE No.	W1406.80

DRAWING No. C-3

SHEET No. 4 OF 12 SHTS.

WASTEWATER COLLECTION SYSTEM NOTES:

1. THE GENERAL REQUIREMENTS AND COVENANTS OF THE DEPARTMENT OF PUBLIC WORKS, COUNTY OF HAWAI'I (JULY 1972): THE STANDARD SPECIFICATIONS FOR PUBLIC WORKS CONSTRUCTION (SEPTEMBER 1986), THE STANDARD DETAILS FOR PUBLIC WORKS CONSTRUCTION, DEPARTMENT OF PUBLIC WORKS, COUNTY OF HAWAI'I, SEPTEMBER 1984 AND THE COUNTY OF HAWAII", DEPARTMENT OF ENVIRONMENTAL MANAGEMENT, WASTEWATER DIVISION (WWD) STANDARD DETAILS (WW-1 THRU WW-9) SHALL BE APPLICABLE AND INCORPORATED HEREIN UNLESS OTHERWISE NOTED.
2. THE CONTRACTOR SHALL PROCURE ALL PERMITS AND LICENSES, PAY ALL CHARGES AND FEES AND GIVE ALL NOTICES NECESSARY AND INCIDENTAL TO THE DULY AND LAWFUL PROSECUTION OF THE WORK.
3. THE CONTRACTOR SHALL FURNISH ALL LABOR, MATERIALS, AND EQUIPMENT REQUIRED FOR THE COMPLETE INSTALLATION OF THE SUBJECT WORK UNLESS SPECIFICALLY WRITTEN OTHERWISE.
4. IT SHALL BE THE CONTRACTOR'S RESPONSIBILITY TO PERFORM A CONSTRUCTION PER THE APPROVED PLANS AND SPECIFICATIONS. ANY ADDITIONS, DELETIONS OR CHANGES TO THE WASTEWATER SYSTEM SHALL MEET THE APPROVAL OF THE COUNTY OF HAWAI'I, DEPARTMENT OF ENVIRONMENTAL MANAGEMENT, WASTEWATER DIVISION.
5. INSPECTIONS SHALL BE REQUIRED FOR ALL WORK WHICH INVOLVES THE WWO'S SEWER MAINS, LATERALS, CLEANOUTS, AND ALL DETECTABLE NEW CONSTRUCTION. CALL THE WASTEWATER DIVISION AT 961-8338 AT LEAST TWO (2) WORKING DAYS IN ADVANCE TO SCHEDULE AN INSPECTION.
   a. WHEN AND AS OFTEN AS THE WWD DETERMINES THROUGH THEIR INSPECTION PROCEDURES, MATERIAL, EQUIPMENT OR WORKMANSHIP DO NOT MEET THE REQUIREMENTS, THE WWD WILL GIVE WRITTEN NOTICE OF THE NONCOMPLIANCE TO THE CONTRACTOR AND IMMEDIATE CORRECTION OF THE DEFICIENCIES SHALL BE ADDRESSED WITH THE WWD ENGINEER AND/OR THEIR REPRESENTATIVE.
   b. INSPECTION SHALL BE PERFORMED PRIOR TO BACKFILLING OR COVERING OF THE PIPE AND AFTER ALL PLUMBING WORK, IN ACCORDANCE WITH THE PLUMBING PERMIT, IS COMPLETE WITHIN THE PARCEL.
6. SEWER WORK SHALL BE SCHEDULED SUCH THAT WORK SHALL NOT BE PERFORMED ON SATURDAYS, SUNDAYS OR COUNTY OF HAWAII HOLIDAYS. IF SUCH WORK DICTATES PERFORMANCE ON THESE NON-WORKING DAYS AND AFTER NORMAL HOURS (3:30 PM TO 7:00 AM) OF OPERATION THEN, THE CONTRACTOR SHALL BE RESPONSIBLE FOR PAYMENT OF OVERTIME CHARGES TO THE WWD.
7. ALL EXISTING WASTEWATER LINE(S), WHETHER OR NOT SHOWN ON THE PLANS, IF DAMAGED DURING CONSTRUCTION, SHALL BE REPAIRED BY THE CONTRACTOR AND THE CONTRACTOR SHALL PAY ALL EXPENSES.
8. BYPASSING OR SPILLING OF SEWAGE TO THE GROUND, DRAINAGE SYSTEM OR STATE WATERS IS PROHIBITED. THE CONTRACTOR SHALL PAY PENALTIES, INCLUDING LEGAL FEES AND OTHER COSTS RELATED TO THE BYPASS AND/OR SPILL.
9. THE CONTRACTOR SHALL BE OR HAVE IN PERSON ON THE JOB SITE OR BE REPRESENTED BY A RESPONSIBLE AGENT WITH AUTHORITY TO ACT FOR THE CONTRACTOR IN CONNECTION WITH THIS PROJECT AT ALL TIMES.
10. AT ALL TIMES DURING THE WORK, KEEP THE PREMISES CLEAN AND ORDERLY, AND UPON COMPLETION OF THE WORK, REPAIR ALL DAMAGE CAUSED BY EQUIPMENT AND LEAVE THE PROJECT FREE OF RUBBISH AND EXCESS MATERIALS OF ANY KIND.

SEWER SYSTEM REQUIREMENTS

1. SEWER MAIN PIPE AND FITTINGS:
   a. ALL SEWER PIPE AND FITTINGS SHALL BE PVC SDR-26 BELL AND SPIGOT OR AN APPROVED EQUAL.
   b. LAYING OF PIPE SHALL COMMENCE AT THE LOWEST POINT, THE BELL END FACING UPSTREAM. PIPE SHALL BE FITTED TOGETHER AND MATCHED SO THAT WHEN LAID IT WILL FORM A UNIFORM AND SMOOTH INVERT.
   c. THE INTERIOR OF THE SEWER PIPE SHALL BE CLEARED OF ALL DEBRIS AND FOREIGN MATERIALS AS THE WORK PROGRESSES. EXPOSED ENDS OF SEWER PIPE SHALL BE CLOSED WITH TEMPORARY COVERS TO PREVENT EARTH AND DEBRIS FROM ENTERING THE PIPE BEFORE LEAVING THE WORKPLACE FOR THE NIGHT.
   d. BECAUSE OF THE NATURE OF PLASTIC PIPE AND FILLINGS, THE CONTRACTOR IS CAUTIONED TO EXERCISE CARE IN HANDLING, LOADING, UNLOADING, AND STORING TO AVOID DAMAGE.

2. TRENCH, PIPE BEDDING, AND BACKFILL:
   a. TRENCHES SHALL BE PROPERLY BACKFILLED AND COMPACTED AS SHOWN ON THE APPROVED PLAN.
   b. PIPE BEDDING SHALL BE CLASS B "1" AGGREGATE BASE COURSE PLACED WITHIN TRENCH NOT LESS THAN 6 INCHES BUT NOT MORE THAN 8 INCHES IN COMPACTED THICKNESS, SHOULD PROVIDE UNIFORM AND ADEQUATE LONGITUDINAL SUPPORT UNDER THE PIPE, AND SHALL BE COMPACTED TO 95 PERCENT MAXIMUM DRY DENSITY UNLESS OTHERWISE NOTED ON PLANS.
   c. PIPE CUSHION SHALL BE CLASS B "1" AGGREGATE BASE COURSE PROPERLY PLACED A MINIMUM OF 12' COMPACTED THICKNESS OVER THE TOP OF THE PIPE TO PROVIDE ADEQUATE SIDE SUPPORT WHILE AVOIDING VERTICAL AND LATERAL DISPLACEMENT.
   d. CONTROLLED LOW-STRENGTH MATERIAL (CLSM) SHALL BE USED AS THE FINAL TRENCH BACKFILL UNLESS OTHERWISE NOTED ON THE PLAN OR APPROVED BY THE WWD ENGINEER.
   e. COMPACTION TESTING FOR BASE COURSE MATERIAL SHALL BE PERFORMED BY AN INDEPENDENT TESTING AND QUALITY CONTROL LABORATORY. COMPACTION TESTING SHALL BE A MINIMUM OF ONE (1) TEST PER 150 LINEAL FEET OR A FRACTION THEREOF. THE ENGINEER RESERVES THE RIGHT TO INCREASE THE FREQUENCY OF COMPACTION TO MATCH FIELD CONDITIONS. TEST RESULTS SHALL BE SUBMITTED TO THE WWD ENGINEER FOR AS PART OF THE FINAL ACCEPTANCE.

3. SEWER LATERAL PIPE AND FITTINGS:
   a. NEW SEWER LATERALS AND CLEANOUT SHALL BE 6" DIAMETER, PVC SDR26 PIPE AND FITTINGS.
   b. SEWER CLEANOUTS SHALL BE LOCATED IN THE *COUNTY RIGHT-OF-WAY* WITHIN ONE FOOT OF THE PROPERTY LINE. THE CLEANOUT SHALL BE EASILY ACCESSIBLE (I.E. NOT BE BURIED OR LOCATED UNDER OR CLOSE TO ROCK WALLS, FENCES OR OTHER OBSTRUCTIONS,
   c. THE CLEANOUT SHALL BE PROVIDED A BRASS COUNTERSUNK CAP AND AN 18"X18"X18" CLASS B CONCRETE COLLAR REINFORCED WITH 1-#3 REINFORCEMENT STEEL LOOP. REFER WWD STANDARD DETAIL WW-2. IN THE EVENT THAT THE CLEANOUT IS INSTALLED WITHIN A SIDEWALK OR SIMILAR AREA HAVING CONCRETE SURFACES, THE CONCRETE COLLAR IS NOT REQUIRED.
   d. IF A CLEANOUT IS SUBJECT TO VEHICULAR OR ABNORMAL LOADING IT SHALL BE PROVIDED A TRAFFIC RATED FRAME/COVER (MODEL SBF 1246W, MANUFACTURED BY SOUTH BAY FOUNDRY OR APPROVED EQUAL) AND SHALL BE INSTALLED AS PER MANUFACTURER'S RECOMMENDATIONS. REFER WWD STANDARD DETAIL WW-4.
   e. SEWER LATERAL CONNECTIONS TO AN EXISTING SEWER MAIN MAY BE MADE WITH A WYE CONFIGURED FLEXIBLE SADDLE ROTATED 45 DEGREES ABOVE THE SEWER SPRING LINE. SEWER LATERAL SADDLE CONNECTIONS AND CORED SEWER MAIN ENTRY SHALL PROVIDE A SMOOTH AND UNOBSTRUCTED FLOW AREA. THE SEWER SADDLE SHALL COMPLETELY OVERLAY THE CORE ENTRY AREA ON THE MAIN SEWER PIPE. THE SADDLE SHALL BE SECURED TO THE MAIN SEWER PIPE WITH STAINLESS STEEL STRAPS AND JACKETED WITH CLASS 8 REINFORCED CONCRETE. THE REINFORCED JACKET SHALL COMPLETELY ENCASE THE EXISTING MAIN SEWER PIPE, BE A MINIMUM OF 6" THICK, AND EXTEND A MINIMUM OF 6" BEYOND THE SEWER SADDLE.

4. SEWER LINE ACCEPTANCE TEST:
   a. ALL NEWLY INSTALLED SEWER MAINS AND LATERALS ARE SUBJECT TO LEAKAGE AND CCTV INSPECTION PRIOR TO FINAL ACCEPTANCE AS DIRECTED BY THE WWD.
   b. LEAKAGE TESTING SHALL BE ACCOMPLISHED WITH SECTION 21.3 D OF THE STANDARD SPECIFICATIONS FOR PUBLIC WORKS CONSTRUCTION, SEPTEMBER 1986. ALL COSTS FOR TESTING SHALL BE BORNE BY THE CONTRACTOR.
   c. AN INITIAL CCTV INSPECTION WILL BE PERFORMED BY THE COUNTY AT NO COST TO THE CONTRACTOR SUBJECT TO THE CONDITIONS BELOW.
      i. THE CONTRACTOR SHALL BE RESPONSIBLE TO OBTAIN, FROM THE WWD, A COPY OF THE SEWER LINE ACCEPTANCE TEST CRITERIA PRIOR TO REQUESTING OR SCHEDULING A CCTV INSPECTION.
      ii. THE CONTRACTOR SHALL ASSIST THE COUNTY IN THE PERFORMANCE OF THE CCTV INSPECTION, SHALL BE RESPONSIBLE FOR ALL TRAFFIC CONTROL REQUIREMENTS, AND SHALL BE RESPONSIBLE FOR CLEANING OF THE LINES TO REMOVE ALL DEBRIS PRIOR TO CCTV INSPECTION. IN THE EVENT THAT PIPES ARE FOUND TO HAVE BEEN INADEQUATELY CLEANED, THE COUNTY WILL TERMINATE THE INSPECTION AND ANY SUBSEQUENT INSPECTIONS WILL BE SUBJECT TO CHARGES TO THE CONTRACTOR.
      iii. THE CONTRACTOR SHALL HAVE A SUPERVISORY REPRESENTATIVE PRESENT DURING PERFORMANCE OF THE CCTV INSPECTION.
      iv. F THE CCTV INSPECTION REVEALS CONDITIONS SUCH AS SAGS, DENTS, OUT-OF-ROUND, ETC. THEN, MANDREL TESTING IN ACCORDANCE WITH SECTION 21.3 E OF THE STANDARD SPECIFICATIONS FOR PUBLIC WORKS CONSTRUCTION, SEPTEMBER 1986 WILL BE REQUIRED AT WHICH THE COST WILL BE BORNE BY THE CONTRACTOR.
      v. CCTV INSPECTIONS WILL BE RECORDED IN VHS OR CDROM FORMAT. IN THE EVENT THAT THE CONTRACTOR REQUESTS A COPY OF THE CCTV INSPECTION, THE CONTRACTOR WILL BE CHARGED FOR THE COPY AT A RATE OF $25.00.

5. FINAL PROJECT SUBMITTALS:
   a. UPON FINAL PROJECT ACCEPTANCE SUBMIT TO WWD ONE (1) SET OF "AS-BUILT" PLANS ON VELLUM AND TWO (2) COPIED SETS AND ONE (1) SET OF ELECTRONIC DRAWINGS IN AUTOCAD 2009 VERSION AND (1) SET OF ELECTRONIC DRAWINGS IN ADOBE PDF FORMAT.
   b. IT IS MANDATORY THAT THE "AS-BUILT" PLANS SHOW CORRECTLY IDENTIFIED PROPERTY TMK NUMBERS, LOCATION OF SEWER MANHOLES, LATERALS, CLEANOUTS AND ALL OTHER MAJOR COMPONENTS OF THE WASTEWATER COLLECTION SYSTEM INCLUDING INVERT ELEVATIONS AT ALT SEWER MANHOLES, LATERAL CONNECTIONS AT THE MAIN, LATERAL ELEVATIONS AT THE CLEANOUT. SUBMITTED DOCUMENTATION SHALL BE CERTIFIED BY A LICENSED PROFESSIONAL LAND SURVEYOR ATTESTING TO THE LOCATION AND ELEVATIONS OF ALL MAJOR COMPONENTS OF THE WASTEWATER COLLECTION SYSTEM AS SHOWN ON THE AS-BUILT PLANS.

DIVISION CHIEF, WASTEWATER DIVISION
DEPARTMENT OF ENVIRONMENTAL MANAGEMENT
COUNTY OF HAWAII

DATE

No.	DATE	DWG. CHK.	REVISIONS
1			
2			
3			

PRINTS TO

DATE

This work was prepared by me or under my supervision and construction of this project will be under my observation. Exp. 04-30-16

Wesley R. Segawa & Associates, Inc.

K. W. LEE LICENSED PROFESSIONAL ENGINEER No. 4004-C DENNIS HAWAII U.S.A.

WRSA
Civil & Structural Engineers
Wesley R. Segawa and Associates, Inc.
Committed to Quality Performance & Value
101 Silva Street, Suite 201, Hilo, Hawaii 96720-4755
Telephone: (808) 935-4677 Fax: (808) 935-2070

Project Title: KEAUKAHA TRACT 1 IMPROVEMENTS LOTS 63-A & 63-B

Sheet Title: W.W.C. SYSTEM NOTES

DESIGN BY:	DRB
DRAWN BY:	DRB
CHECKED BY:	DL
APPROVED BY:	DL
DATE:	NOV. 2015
SCALE:	AS NOTED
FILE No.	W1406.80

DRAWING No. C-4

SHEET No. 5 OF 12 SHTS.

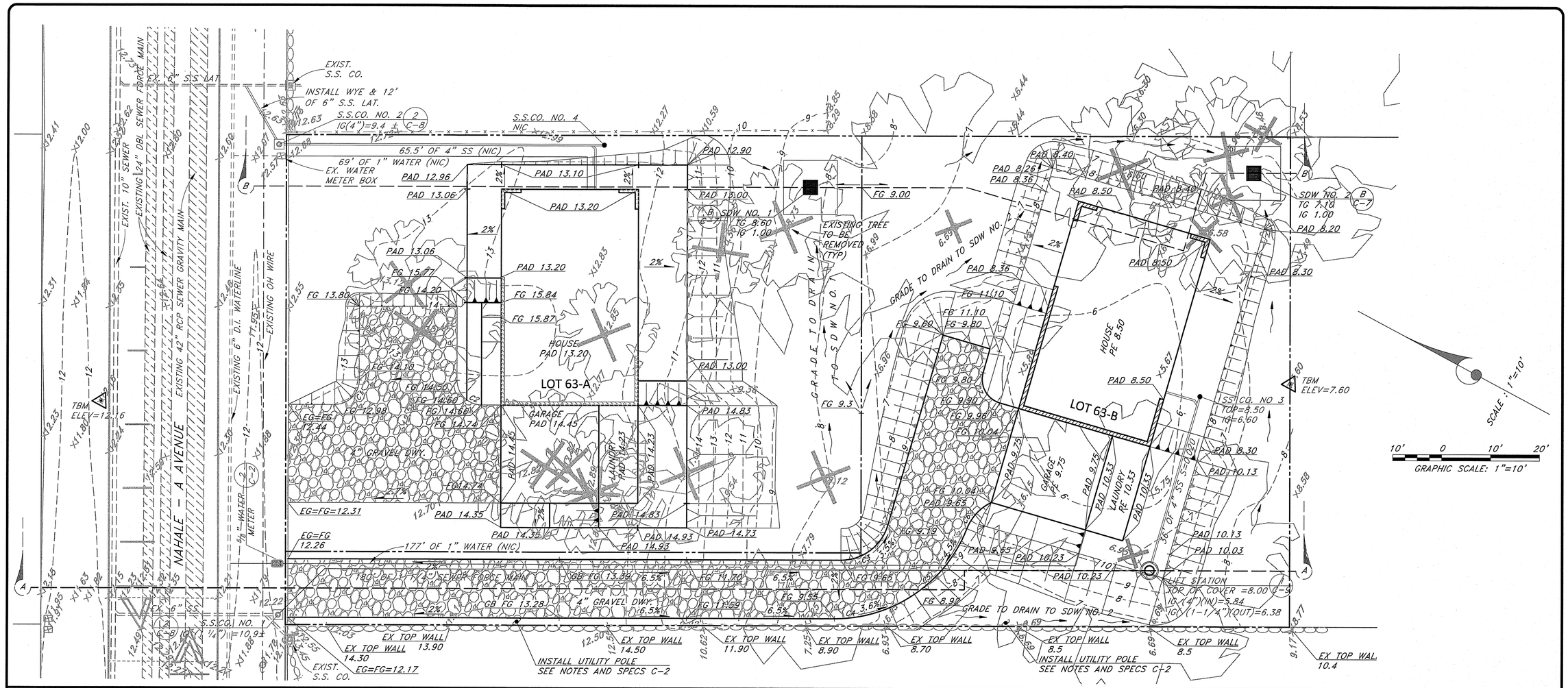

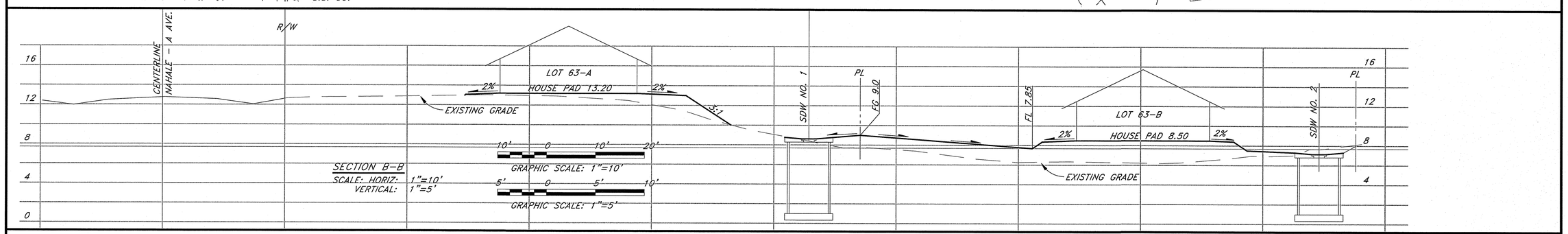

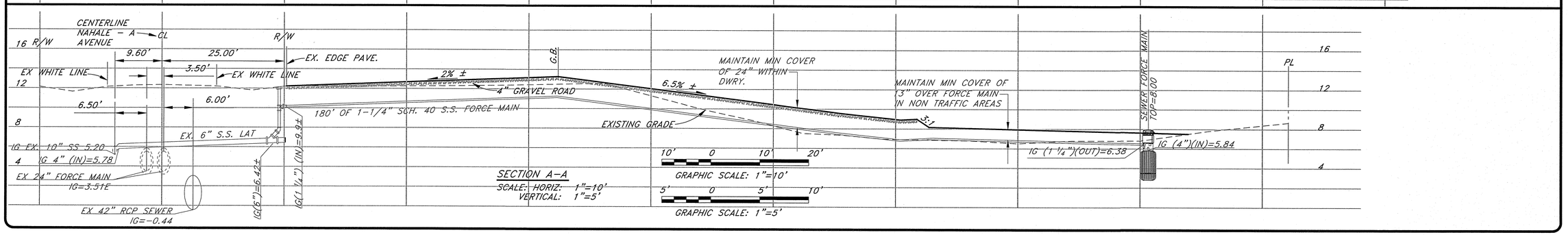

No.	DATE	DWG.	CHK.	REVISIONS

PRINTS TO

This work was prepared by me or under my supervision and construction of this project will be under my observation. Exp. 04-30-16

Wesley R. Segawa & Associates, Inc.

DENNIS K.W. LEE LICENSED PROFESSIONAL ENGINEER No. 4004-C HAWAII U.S.A.

WRSA
Wesley R. Segawa and Associates, Inc.
Committed to Quality Performance & Value
Civil & Structural Engineers
101 Silva Street, Suite 201 Hilo, Hawaii 96720-4755
Telephone: (808) 935-4677 Fax: (808) 935-2070

Project Title: KEAUKAHA TRACT 1 IMPROVEMENTS

Sheet Title: LOTS 63-A & 63-B GRADING AND DRAINAGE PLAN

DESIGN BY:	DRB
DRAWN BY:	DRB
CHECKED BY:	DL
APPROVED BY:	DL
DATE:	NOV. 2015
SCALE:	AS NOTED
FILE No.	W1406.80

DRAWING No. C-5

SHEET No. 6 OF 12 SHTS.

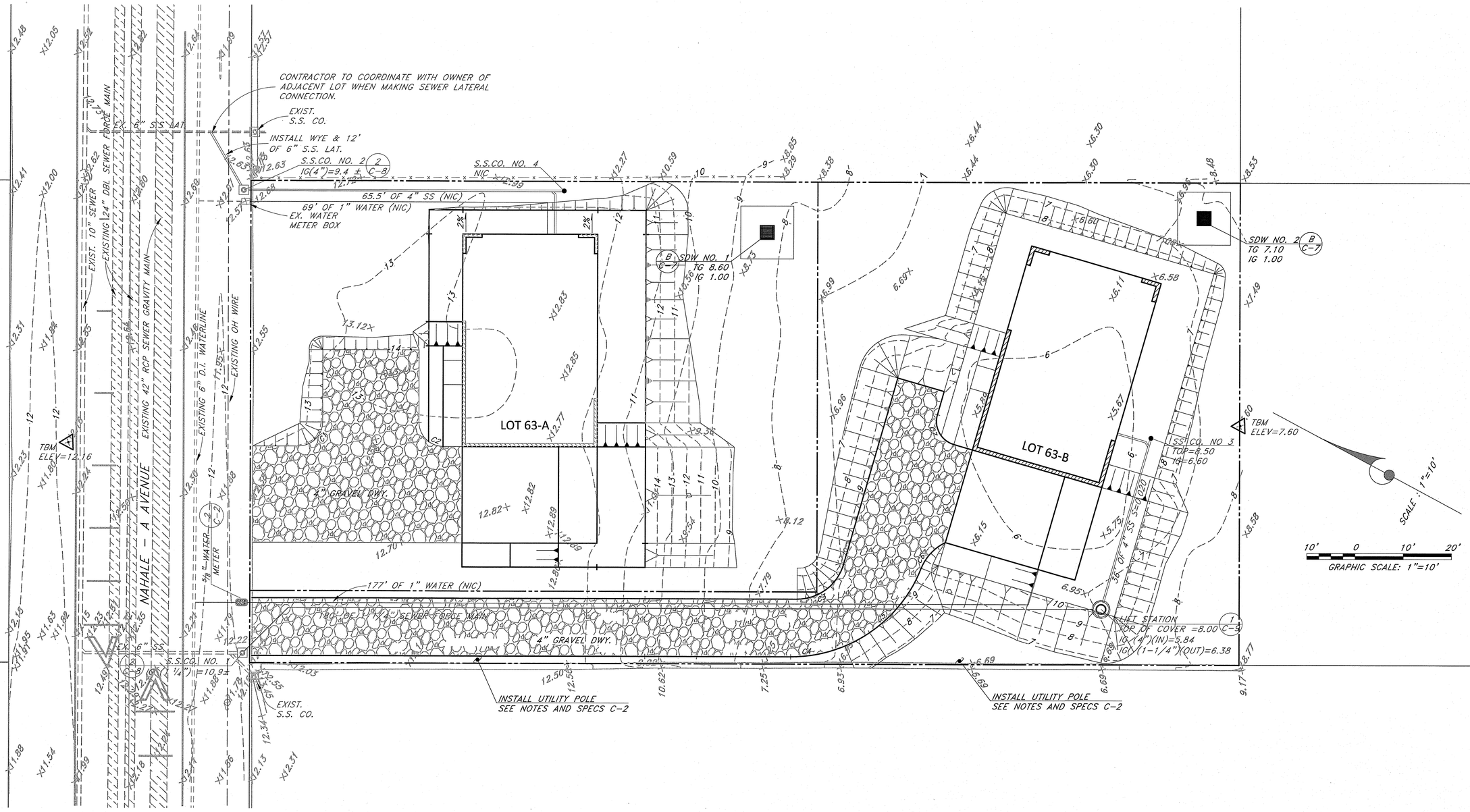

Curve Table					
Curve #	Length	Radius	Delta	Chord Direction	Chord Length
C1	7.85	5.00	90.00	S73° 06' 00"E	7.07
C2	7.85	5.00	90.00	S16° 54' 00"W	7.07
C3	12.90	10.00	73.90	S65° 03' 00"E	12.02
C4	17.38	29.00	34.34	S45° 16' 21"E	17.12
C5	17.38	29.00	34.34	S79° 37' 03"E	17.12
C6	7.51	10.00	43.05	N75° 16' 01"W	7.34
C7	7.85	5.00	90.00	S33° 00' 00"W	7.07

No.	DATE	DWG.	CHK.	REVISIONS

PRINTS TO

DATE

This work was prepared by me or under my supervision and construction of this project will be under my observation. Exp. 04-30-16

Wesley R. Segawa & Associates, Inc.

DENNIS K. W. LEE LICENSED PROFESSIONAL ENGINEER No. 4004-C HAWAII U.S.A.

WRSA
Wesley R. Segawa and Associates, Inc.
Committed to Quality Performance & Value
Civil & Structural Engineers
101 Silva Street, Suite 201 Hilo, Hawaii 96720-4755
Telephone: (808) 935-4677 Fax: (808) 935-2070

Project Title: KEAUKAHA TRACT 1 IMPROVEMENTS LOTS 63-A & 63-B

Sheet Title: UTILITY PLAN

DESIGN BY: DRB
DRAWN BY: DRB
CHECKED BY: DL
APPROVED BY: DL
DATE: NOV. 2015
SCALE: AS NOTED
FILE No. W1406.80

DRAWING No. C-6

SHEET No. 7 OF 12 SHTS.

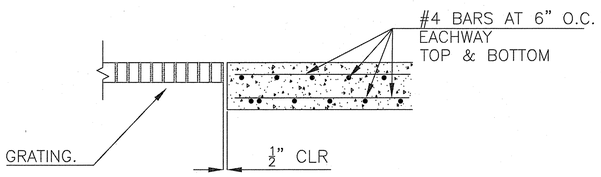

SECTION A–A
NOT TO SCALE

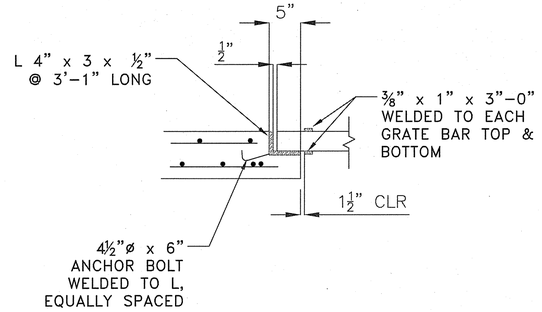

SECTION B–B
NOT TO SCALE

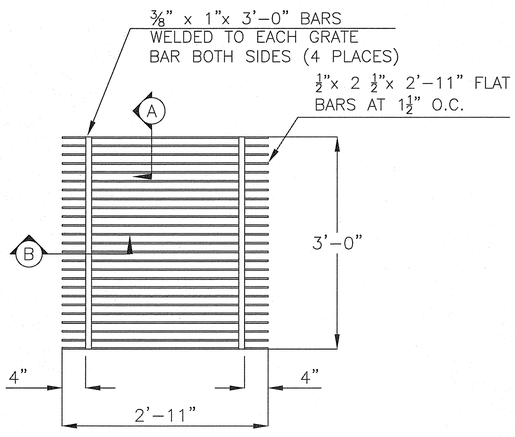

GRATING
NOT TO SCALE

A/C-7 DRYWELL GRATE DETAIL
NOT TO SCALE

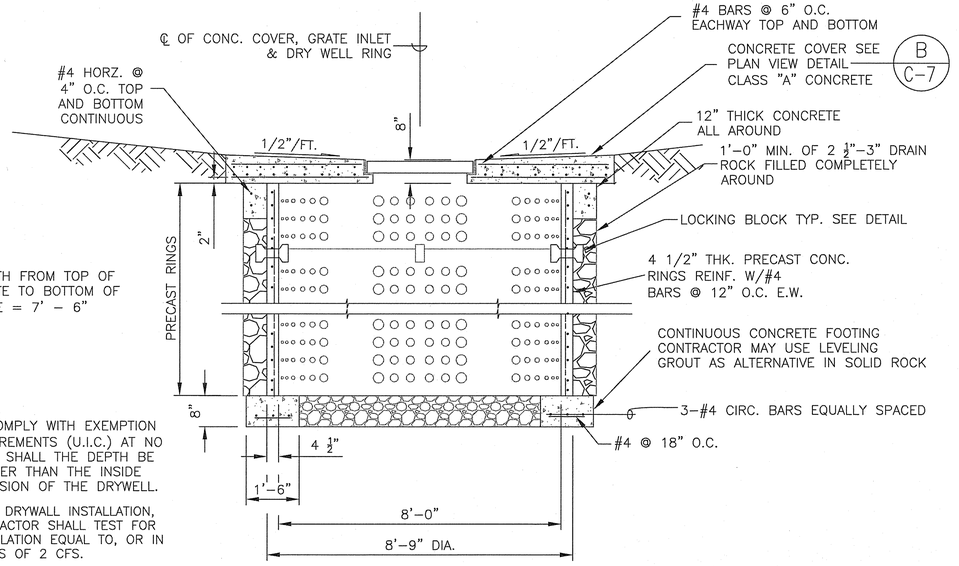

DEPTH FROM TOP OF GRATE TO BOTTOM OF HOLE = 7' – 6"

NOTES:

1. TO COMPLY WITH EXEMPTION REQUIREMENTS (U.I.C.) AT NO POINT SHALL THE DEPTH BE GREATER THAN THE INSIDE DIMENSION OF THE DRYWELL.
2. AFTER DRYWALL INSTALLATION, CONTRACTOR SHALL TEST FOR PERCOLATION EQUAL TO, OR IN EXCESS OF 2 CFS.

CONCRETE RING DRYWELL
NOT TO SCALE

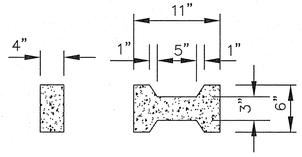

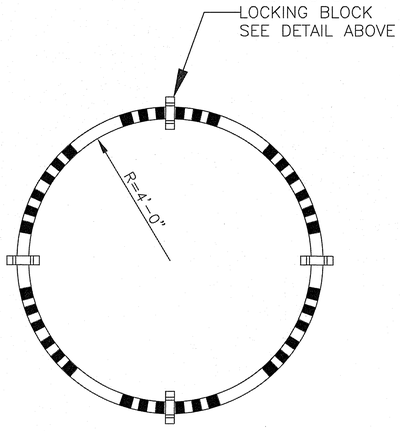

TYPICAL RING CROSS SECTION
NOT TO SCALE

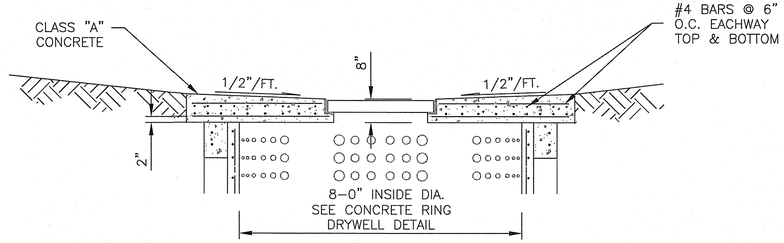

SECTION A–A
NOT TO SCALE

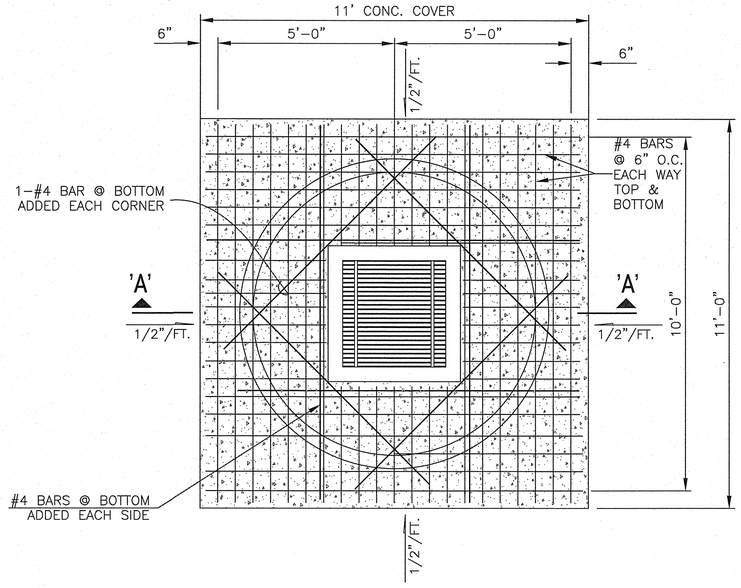

PLAN
NOT TO SCALE

B/C-7 CONCRETE DRYWELL DETAIL
NOT TO SCALE

No.	DATE	DWG.	CHK.	REVISIONS
△				
△				
△				

DATE | PRINTS TO

This work was prepared by me or under my supervision and construction of this project will be under my observation.
Exp. 04–30–16
Wesley R. Segawa & Associates, Inc.

DENNIS K. W. LEE
LICENSED PROFESSIONAL ENGINEER
No. 4004–C
HAWAII U.S.A.

WRSA
Wesley R. Segawa and Associates, Inc.
Committed to Quality Performance & Value
Civil & Structural Engineers
101 Silva Street, Suite 201 Hilo, Hawaii 96720-4755
Telephone: (808) 935-4677 Fax: (808) 935-2070

Project Title: KEAUKAHA TRACT 1 IMPROVEMENTS
LOTS 63-A & 63-B
Sheet Title: SHALLOW DRYWELL DETAILS

DESIGN BY: DRB
DRAWN BY: DRB
CHECKED BY: DL
APPROVED BY: DL
DATE: NOV. 2015
SCALE: AS NOTED
FILE No. W1406.80

DRAWING No. C-7

SHEET No. 8 OF 12 SHTS.

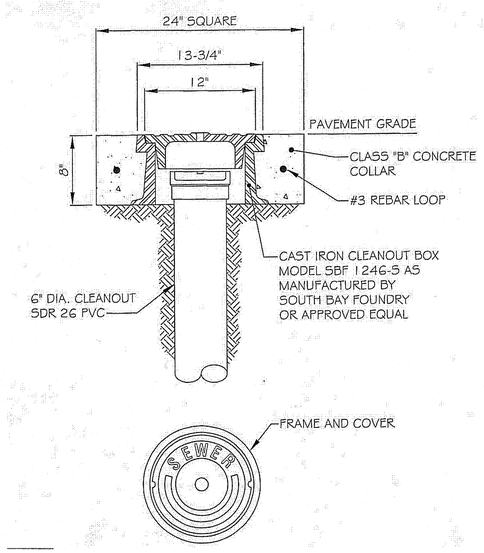

1 / C-8 TYPICAL TRAFFIC RATED FRAME & COVER
(COUNTY OF HAWAII, ENVIRONMENTAL MANAGEMENT, WASTEWATER DIVISION)
NOT TO SCALE

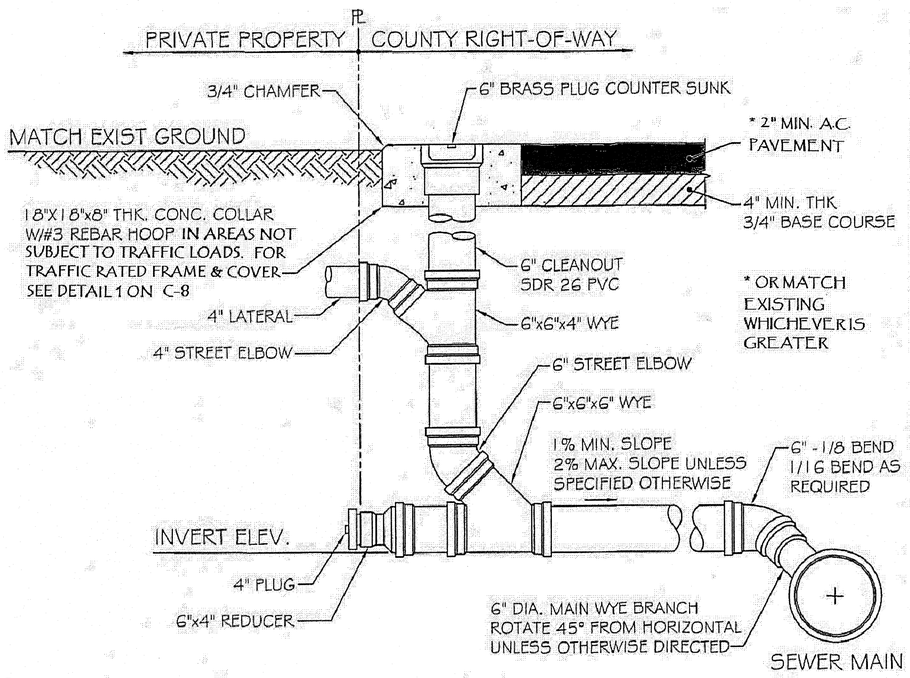

2 / C-8 TYPICAL LATERAL & CLEANOUT DETAIL
(COUNTY OF HAWAII, ENVIRONMENTAL MANAGEMENT, WASTEWATER DIVISION)
NOT TO SCALE

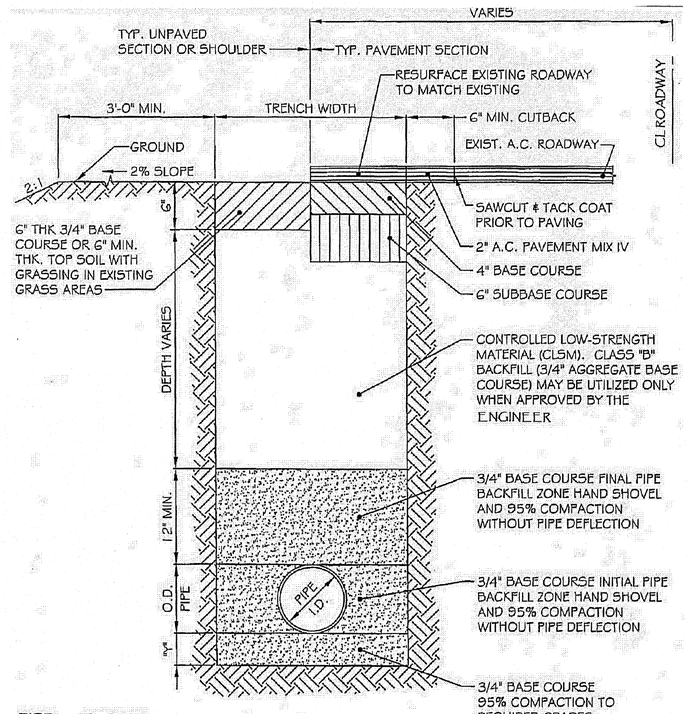

PIPE SIZE	TRENCH WIDTH	"Y"
6"	24"	4"
8"	24"	4"
10"	24"	4"
12"	30"	5"

NOTE: TRENCH RESTORATION WITHIN STATE RIGHT-OF-WAYS SHALL CONFORM TO THE REQUIREMENTS OF THE STATE OF HAWAII DEPARTMENT OF TRANSPORTATION HIGHWAYS DIVISION.

3 / C-8 TYPICAL TRENCH DETAIL COUNTY ROADS
(COUNTY OF HAWAII, ENVIRONMENTAL MANAGEMENT, WASTEWATER DIVISION)
NOT TO SCALE

DIVISION CHIEF, WASTEWATER DIVISION
DEPARTMENT OF ENVIRONMENTAL MANAGEMENT
COUNTY OF HAWAII

DATE

No.	DATE	DWG. CHK.	REVISIONS

PRINTS TO

DATE

This work was prepared by me or under my supervision and construction of this project will be under my observation.
Exp. 04-30-16
Wesley R. Segawa & Associates, Inc.

K.W. LEE * LICENSED PROFESSIONAL ENGINEER No. 4004-C * HAWAII U.S.A.

WRSA
Wesley R. Segawa and Associates, Inc.
Committed to Quality Performance & Value
Civil & Structural Engineers
101 Silva Street, Suite 201 Hilo, Hawaii 96720-4755
Telephone: (808) 935-4677 Fax: (808) 935-2070

Project Title: KEAUKAHA TRACT 1 IMPROVEMENTS LOTS 63-A & 63-B

Sheet Title: SANITARY SEWER DETAILS

DESIGN BY:	DRB
DRAWN BY:	DRB
CHECKED BY:	DL
APPROVED BY:	DL
DATE:	NOV. 2015
SCALE:	AS NOTED
FILE No.	W1406.80

DRAWING No. C-8

SHEET No. 9 OF 12 SHTS.

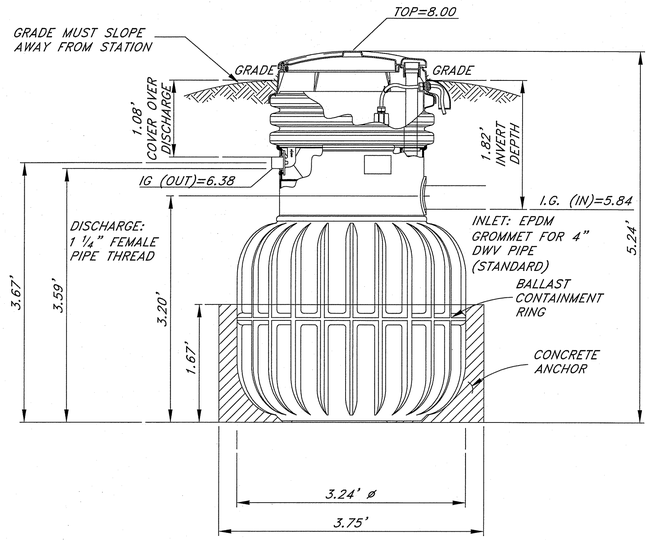

DH151-63 *(HARD WIRED LEVEL CONTROLS)*

OR APPROVED EQUAL

PRODUCT INFORMATION:

ENVIRONMENT ONE CORPORATION
2773 BALLTOWN ROAD
NISKAYUNA, NEW YORK 12309-1090

(518) 346 6161
(518) 346 6188 (FAX)

WWW.EONE.COM

eone SEWER SYSTEMS

MODEL DH151-63

NA0051P04

1 / C-9 SANITARY SEWER FORCE MAIN
ENVIRONMENT ONE GRINDER PUMP
OR APPROVED EQUAL

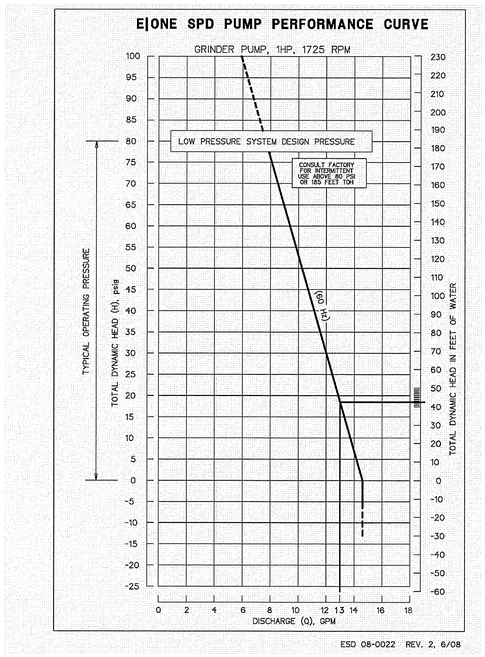

NOTES:

MINIMUM REQUIREMENT FOR MDL. DH151-63 OR APPROVED EQUAL.

1. MANUFACTURE TO FURNISH A SET OF SHOP DRAWINGS DETAILING THE EQUIPMENT TO BE FURNISHED INCLUDING DIMENSIONAL DATA AND MATERIALS OF CONSTRUCTIONS.
2. THE PUMP IS CAPABLE OF DELIVERING 15 GPM AGAINST A RATED TOTAL DYNAMIC HEAD OF 0 FEET (0 PSIG), 11 GPM AGAINST A RATED TOTAL DYNAMIC HEAD OF 92 FEET (40 PSIG) AND 7.8 GPM AGAINST A RATED TOTAL DYNAMIC HEAD OF 185 FEET (PSIG).
3. THE PUMP IS A CUSTOM DESIGNED, INTERGAL, VERTICAL ROTOR, MOTOR DRIVEN, AND SOLID HANDLING PUMP OF PROGRESSING CAVITY TYPE WITH A SINGLE MECHANICAL SEAL.
4. THE GRINDER SHALL BE CAPABLE OF REDUCING ALL COMPONENTS IN NORMAL DOMESTIC SEWAGE.
5. ELECTRIC MOTOR IS A 1 HP, 1725 RPM, 240 VOLT 60 HERTZ, 1 PHASE, CAPACITOR START, BALL BEARING, AIR-COOLED INDUCTION TYPE WITH CLASS F INSTALLATION, LOW STARTING CURRENT NOT TO EXCEED 30 AMPERES AND HIGH STARTING TORQUE OF 8.4 FOOT POUNDS.
6. TANK AND INTEGRAL ACCESSWAY (MODEL DH 151-63 150 GALLON SIMPLEX) HIGH DENSITY POLYETHYLENE CONSTRUCTION.
   - A. THE COVER SHALL BE HIGH DENSITY POLYETHYLENE, GREEN IN COLOR WITH A LOAD RATING OF 150 LBS PER SQUARE FOOT.
   - B. ALL DISCHARGE PIPING SHALL BE CONSTRUCTED OF 304 STAINLESS STEEL.THE DISCHARGE SHALL TERMINATE OUTSIDE THE ACCESSWAY BULKHEAD WITH A STAINLESS STEEL, 1 -1/4" FEMALE NPT FITTING.
7. CORE UNIT: THE GRINDER PUMP STATION SHALL HAVE A CARTRIDGE TYPE, EASILY REMOVABLE CORE ASSEMBLY CONSISTING OF PUMP, MOTOR, GRINDER, ALL MOTOR CONTROLS, CHECK VALVE, ANTI-SIPHON VALVE, LEVEL CONTROLS, ELECTRICAL QUICK DISCONNECT AND WIRING.
8. ALARM PANEL IS A NEMA 4X, UL-LISTED SUITABLE FOR WALL OR POLE MOUNTING. THE NEMA 4X ENCLOSURE SHALL BE MANUFACTURED OF THERMOPLASTIC POLYESTER TO ENSURE CORROSION RESISTANCE.
9. SENTRY SIMPLEX PROTECT PLUS CONSIST OF:
   - A. HIGH/LOW VOLTAGE MONITORING WITH TROUBLE INDICATION.
   - B. HIGH/LOW WATAGE MONITORING WITH TROUBLE INDICATION.
   - C. EXTENDED RUN TIME MONITORING WITH TROUBLE INDICATION.
   - D. CYCLE. EVENT COUNTER.
   - E. RUN TIME COUNTER (HOUR METER)
   - F. RUN TIME LIMIT.
   - G. POWER-UP DELAY.
   - H. ALARM DELAY.
   - I. SYSTEM SELF-TEST DIAGNOSTIC.
   - J. USER – SELECTABLE ALARM LATCH.
   - K. USER – SELECTABLE PROTECT MODE DISABLE.
   - L. USER – SELECTABLE BUZZER TIMER.
10. THE CONTRACTOR SHALL BE RESPONSIBLE FOR HANDLING GROUND WATER TO PROVIDE FIRM, DRY SUBGRADE FOR STRUCTURES, AND SHALL GUARD AGAINST FLOTATION OR OTHER DAMAGE RESULITING FROM GENERAL WATER OR FLOODING.
11. THE ELECTRICAL ENCLOSURE SHALL BE FURNISHED, INSTALLED AND WIRED TO THE GRINDER PUMP STATION BY THE CONTRACTOR.
12. ALL EQUIPMENT AND MATERIALS NECESSARY TO PERFORM TESTING SHALL BE THE RESPONSIBILITY OF THE INSTALLING CONTRACTOR.

No.	DATE	DWG. CHK.	REVISIONS	DATE	PRINTS TO
1					
2					
3					

This work was prepared by me or under my supervision and construction of this project will be under my observation. Exp. date: 4-30-16
Wesley R. Segawa & Associates, Inc.

DENNIS K.W. LEE LICENSED PROFESSIONAL ENGINEER No. 4004-C HAWAII USA

WRSA
Wesley R. Segawa and Associates, Inc.
Committed to Quality Performance & Value
Civil & Structural Engineers
101 Silva Street, Suite 201 Hilo, Hawaii 96720-4755
Telephone: (808) 935-4677 Fax: (808) 935-2070

Project Title: KEAUKAHA TRACT 1 IMPROVEMENTS LOTS 63-A & 63-B

Sheet Title: SANITARY SEWER FORCE MAIN NOTES & DETAILS

DESIGN BY:	DRB
DRAWN BY:	DRB
CHECKED BY:	DL
APPROVED BY:	DL
DATE:	NOV. 2015
SCALE:	AS NOTED
FILE No.	W1406.80

DRAWING No. C-9

SHEET No. 10 OF 12 SHTS.

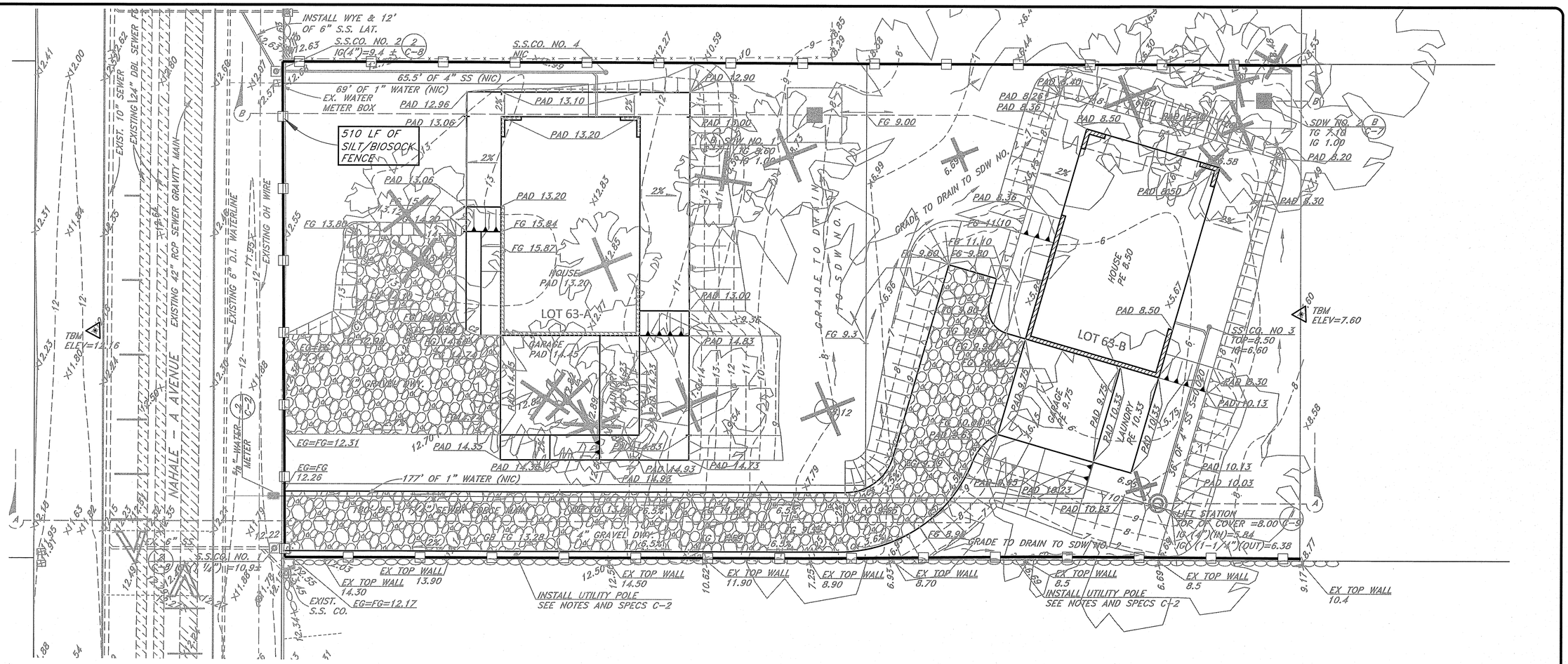
INSTALL WYE & 12' OF 6" S.S. LAT.
S.S.CO. NO. 2
IG(4")=9.4 ±
S.S.CO. NO. 4
NIC
65.5' OF 4" SS (NIC)
69' OF 1" WATER (NIC)
EX. WATER METER BOX
510 LF OF SILT/BIOSOCK FENCE
LOT 63-A
LOT 63-B
HOUSE PAD 13.20
GARAGE PAD 14.45
GRAVEL DWY.
4" GRAVEL DWY.
HOUSE PE 8.50
GARAGE PE 9.75
LAUNDRY RE 10.33
SDW NO. 1
SDW NO. 2
GRADE TO DRAIN TO SDW NO. 1
GRADE TO DRAIN TO SDW NO. 2
SS CO. NO 3
TOP=8.50
IG=6.60
TBM ELEV=12.16
TBM ELEV=7.60
NAHALE - A AVENUE
EXISTING 42" RCP SEWER GRAVITY MAIN
EXISTING 24" DBL SEWER FM
EXIST. 10" SEWER
EXISTING 6" D.I. WATERLINE
EXISTING OH WIRE
6" WATER METER
1" WATER SERVICE
177' OF 1" WATER (NIC)
160' OF 4" (2") SEWER FORCE MAIN
S.S.CO. NO. 1
1/4"=10.9±
EXIST. S.S. CO.
EG=FG=12.31
EG=FG 12.26
EG=FG=12.17
INSTALL UTILITY POLE SEE NOTES AND SPECS C-2
INSTALL UTILITY POLE SEE NOTES AND SPECS C-2
EX TOP WALL 13.90
EX TOP WALL 14.30
EX TOP WALL 14.50
EX TOP WALL 11.90
EX TOP WALL 8.90
EX TOP WALL 8.70
EX TOP WALL 8.5
EX TOP WALL 8.5
EX TOP WALL 10.4
WET STATION
TOP OF COVER =8.00 (C-9)
IG (4")(IN)=5.84
IG (1-1/4")(OUT)=6.38
FG 8.9%
SDW NO. 2
TG X.Xd
IG 1.0p
PAD 8.20
PAD 8.30
PAD 10.13
PAD 10.03
PAD 10.23
PAD 14.35
PAD 14.83
PAD 14.93
PAD 14.73
PAD 14.98
PAD 12.90
PAD 13.10
PAD 13.00
PAD 12.96
PAD 13.06
PAD 13.20
PAD 8.26
PAD 8.36
PAD 8.50
PAD 8.60
PAD 9.75
PAD 9.30
PAD 9.23
FG 9.00
FG 11.10
FG 9.60
FG 9.80
FG 9.3
FG 13.80
FG 15.84
FG 15.87
FG 14.60
FG 14.90
FG 13.20
FG 13.40
FG 9.90
FG 9.94
FG 9.84
FG 9.74
FG 9.64
FG 9.54
FG 9.44
FG 9.34
FG 9.24
FG 9.14
FG 9.04
FG 8.94
FG 8.84
FG 8.74
FG 8.64
FG 8.54
FG 8.44
FG 8.34
FG 8.24
FG 8.14
FG 8.04
FG 7.94
FG 7.84
FG 7.74
FG 7.64
FG 7.54
FG 7.44
FG 7.34
FG 7.24
FG 7.14
FG 7.04
FG 6.94
FG 6.84
FG 6.74
FG 6.64
FG 6.54
FG 6.44
FG 6.34
FG 6.24
FG 6.14
FG 6.04
FG 5.94
FG 5.84
FG 5.74
FG 5.64
FG 5.54
FG 5.44
FG 5.34
FG 5.24
FG 5.14
FG 5.04
FG 4.94
FG 4.84
FG 4.74
FG 4.64
FG 4.54
FG 4.44
FG 4.34
FG 4.24
FG 4.14
FG 4.04
FG 3.94
FG 3.84
FG 3.74
FG 3.64
FG 3.54
FG 3.44
FG 3.34
FG 3.24
FG 3.14
FG 3.04
FG 2.94
FG 2.84
FG 2.74
FG 2.64
FG 2.54
FG 2.44
FG 2.34
FG 2.24
FG 2.14
FG 2.04
FG 1.94
FG 1.84
FG 1.74
FG 1.64
FG 1.54
FG 1.44
FG 1.34
FG 1.24
FG 1.14
FG 1.04
FG 0.94
FG 0.84
FG 0.74
FG 0.64
FG 0.54
FG 0.44
FG 0.34
FG 0.24
FG 0.14
FG 0.04
FG 0.00
FG 0.10
FG 0.20
FG 0.30
FG 0.40
FG 0.50
FG 0.60
FG 0.70
FG 0.80
FG 0.90
FG 1.00
FG 1.10
FG 1.20
FG 1.30
FG 1.40
FG 1.50
FG 1.60
FG 1.70
FG 1.80
FG 1.90
FG 2.00
FG 2.10
FG 2.20
FG 2.30
FG 2.40
FG 2.50
FG 2.60
FG 2.70
FG 2.80
FG 2.90
FG 3.00
FG 3.10
FG 3.20
FG 3.30
FG 3.40
FG 3.50
FG 3.60
FG 3.70
FG 3.80
FG 3.90
FG 4.00
FG 4.10
FG 4.20
FG 4.30
FG 4.40
FG 4.50
FG 4.60
FG 4.70
FG 4.80
FG 4.90
FG 5.00
FG 5.10
FG 5.20
FG 5.30
FG 5.40
FG 5.50
FG 5.60
FG 5.70
FG 5.80
FG 5.90
FG 6.00
FG 6.10
FG 6.20
FG 6.30
FG 6.40
FG 6.50
FG 6.60
FG 6.70
FG 6.80
FG 6.90
FG 7.00
FG 7.10
FG 7.20
FG 7.30
FG 7.40
FG 7.50
FG 7.60
FG 7.70
FG 7.80
FG 7.90
FG 8.00
FG 8.10
FG 8.20
FG 8.30
FG 8.40
FG 8.50
FG 8.60
FG 8.70
FG 8.80
FG 9.10
FG 9.20
FG 9.40
FG 9.50
FG 9.70
FG 9.90
FG 10.00
FG 10.10
FG 10.20
FG 10.30
FG 10.40
FG 10.50
FG 10.60
FG 10.70
FG 10.80
FG 10.90
FG 11.00
FG 11.20
FG 11.30
FG 11.40
FG 11.50
FG 11.60
FG 11.70
FG 11.80
FG 11.90
FG 12.00
FG 12.10
FG 12.20
FG 12.30
FG 12.40
FG 12.50
FG 12.60
FG 12.70
FG 12.80
FG 12.90
FG 13.00
FG 13.10
FG 13.30
FG 13.50
FG 13.60
FG 13.70
FG 13.90
FG 14.00
FG 14.10
FG 14.20
FG 14.30
FG 14.40
FG 14.50
FG 14.70
FG 14.80
FG 15.00
FG 15.10
FG 15.20
FG 15.30
FG 15.40
FG 15.50
FG 15.60
FG 15.70
FG 15.80
FG 15.90
FG 16.00
FG 16.10
FG 16.20
FG 16.30
FG 16.40
FG 16.50
FG 16.60
FG 16.70
FG 16.80
FG 16.90
FG

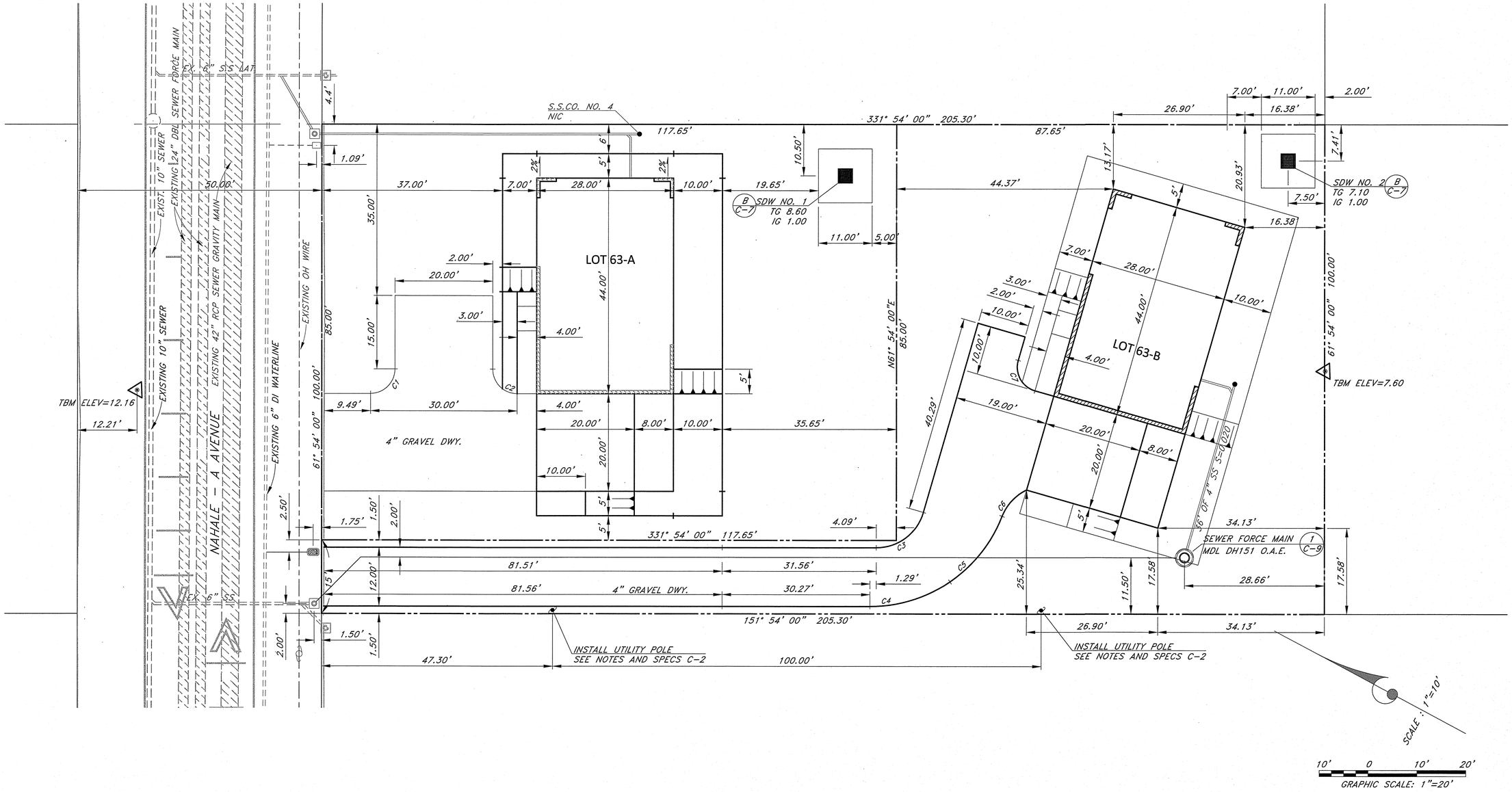

Curve Table					
Curve #	Length	Radius	Delta	Chord Direction	Chord Length
C1	7.85	5.00	90.00	S73° 06' 00"E	7.07
C2	7.85	5.00	90.00	S16° 54' 00"W	7.07
C3	12.90	10.00	73.90	S65° 03' 00"E	12.02
C4	17.38	29.00	34.34	S45° 16' 21"E	17.12
C5	17.38	29.00	34.34	S79° 37' 03"E	17.12
C6	7.51	10.00	43.05	N75° 16' 01"W	7.34
C7	7.85	5.00	90.00	S33° 00' 00"W	7.07

No.	DATE	DWG. CHK.	REVISIONS
1			
2			
3			

PRINTS TO

DATE

This work was prepared by me or under my supervision and this project will be under my observation.
Exp. 04-30-16
Wesley R. Segawa & Associates, Inc.

K. W. DENNIS LEE
LICENSED PROFESSIONAL ENGINEER
No. 4004-C
HAWAII
U.S.A.

WRSA
Wesley R. Segawa and Associates, Inc.
Committed to Quality Performance & Value
Civil & Structural Engineers
101 Silva Street, Suite 201 Hilo, Hawaii 96720-4755
Telephone: (808) 935-4677 Fax: (808) 935-2070

Project Title: KEAUKAHA TRACT 1 IMPROVEMENTS LOTS 63-A & 63-B

Sheet Title: DIMENSION PLAN

DESIGN BY:	DRB
DRAWN BY:	DRB
CHECKED BY:	DL
APPROVED BY:	DL
DATE:	NOV. 2015
SCALE:	AS NOTED
FILE No.	W1406.80

DRAWING No. C-11

SHEET No. 12 OF 12 SHTS.

STATE OF HAWAII
DEPARTMENT OF HAWAIIAN HOME LANDS

KEAUKAHA TRACT 1 IMPROVEMENTS

LOTS 131-A-1, 131-A-2 & 131-A-3

WAIAKEA, SOUTH HILO, HAWAII
TAX MAP KEY: (3) 2 - 1 - 021: 010
IFB-16-HHL-014
SUBDIVISION APPLICATION NO: SUB-15-001463

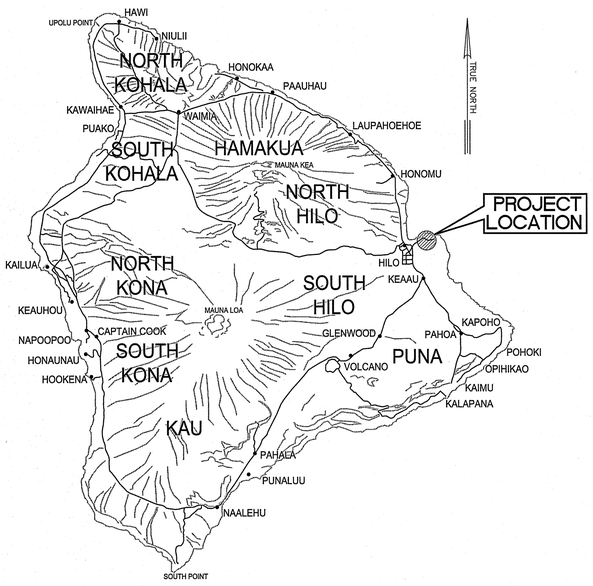

ISLAND OF HAWAII
NOT TO SCALE

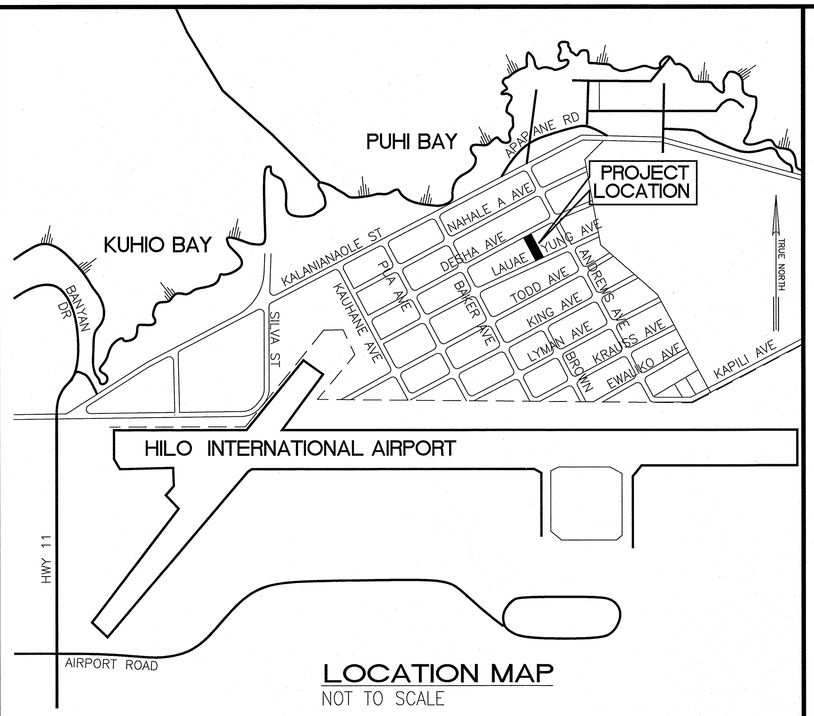

LOCATION MAP
NOT TO SCALE

I N D E X

SHEET NO.	DESCRIPTION	DRAWING NO.
1	TITLE SHEET	T-1
2	MISCELLANEOPUS NOTES	C-1
3	UTILITY POLE NOTES & SPECIFICATIONS	C-2
4	WATER NOTES	C-3
5	WASTEWATER COLLECTION NOTES	C-4
6	GRADING PLAN LOT 131-A-1&2	C-5
7	UTILITY PLAN LOT 131-A-1&2	C-6
8	GRADING PLAN LOT 131-A-3	C-7
9	UTILITY PLAN LOT 131-A-3	C-8
10	SHALLOW DRYWELL DETAILS	C-9
11	SANITARY SEWER DETAILS	C-10
12	EROSION CONTROL (BMP) PLAN	C-11
13	DIMENSION PLAN LOT 131-A-1&2	C-12
14	DIMENSION PLAN LOT 131-A-3	C-13

APPROVED BY:

CHAIRMAN, HAWAIIAN HOMES COMMISSION
STATE OF HAWAII — DATE: 1/24/16

MANAGER, CHIEF-ENGINEER, DEPARTMENT OF WATER SUPPLY
COUNTY OF HAWAII — DATE:

DIRECTOR, DEPARTMENT OF ENVIRONMENTAL MANAGEMENT
COUNTY OF HAWAII — DATE:

DIRECTOR, PLANNING DEPARTMENT
COUNTY OF HAWAII — DATE:

FOR GRADING PURPOSES ONLY;

DIRECTOR, DEPARTMENT OF PUBLIC WORKS
COUNTY OF HAWAII — DATE:

No.	DATE	DWG.	CHK.	REVISIONS

PRINTS TO

DATE

This work was prepared by me or under my supervision and construction of this project will be under my observation.
Exp. 04-30-16

Dennis K. W. Lee
Wesley R. Segawa & Associates, Inc.

DENNIS K. W. LEE
LICENSED PROFESSIONAL ENGINEER
No. 4004-C
HAWAII U.S.A.

WRSA
Wesley R. Segawa and Associates, Inc.
Committed to Quality Performance & Value
Civil & Structural Engineers
101 Silva Street, Suite 201 Hilo, Hawaii 96720-4755
Telephone: (803) 935-4677 Fax: (808) 935-2070

Project Title: KEAUKAHA TRACT 1 IMPROVEMENTS
LOTS 131-A-1, 131-A-2 & 131-A-3
Sheet Title: TITLE SHEET

DESIGN BY: DRB
DRAWN BY: DRB
CHECKED BY: DL
APPROVED BY: DL
DATE: 2015
SCALE: AS NOTED
FILE No. W1302.43

DRAWING No. T-1

SHEET No. 1 OF 14 SHTS.

GRADING NOTES:

1. ALL GRADING WORK SHALL CONFORM TO CHAPTER 10 OF THE HAWAII COUNTY CODE. SHOULD A GRADING PERMIT BE REQUIRED, NO WORK SHALL COMMENCE UNTIL THE DEPARTMENT OF PUBLIC WORKS (DPW) APPROVES A GRADING PERMIT.

2. THE CONTRACTOR SHALL REMOVE ALL SILT AND DEBRIS DEPOSITED IN DRAINAGE FACILITIES, ROADWAYS AND OTHER AREAS RESULTING FROM HIS WORK. THE COSTS INCURRED FOR ANY NECESSARY REMEDIAL ACTION BY THE DPW, SHALL BE PAYABLE BY THE CONTRACTOR.

3. THE CONTRACTOR, AT HIS OWN EXPENSE, SHALL KEEP THE PROJECT AND SURROUNDING AREAS FREE FROM DUST NUISANCES. THE WORK SHALL BE IN CONFORMANCE WITH THE AIR POLLUTION CONTROL RULES OF THE STATE DEPARTMENT OF HEALTH, HAR 11-60.1, and FUGITIVE DUST.

4. ALL GRADING OPERATIONS SHALL BE PERFORMED IN CONFORMANCE WITH THE APPLICABLE PROVISIONS OF THE HAWAII ADMINISTRATIVE RULES, TITLE 11, CHAPTER 55, WATER POLLUTION CONTROL AND CHAPTER 54, WATER QUALITY STANDARDS, AND TO THE EROSION AND SEDIMENTATION CONTROL STANDARDS AND GUIDELINES OF THE DEPARTMENT OF PUBLIC WORKS, COUNTY OF HAWAII.

5. THE CONTRACTOR SHALL SOD OR PLANT ALL SLOPES AND EXPOSED AREAS IMMEDIATELY AFTER THE GRADING WORK HAS BEEN COMPLETED.

6. FILLS ON SLOPES STEEPER THAN 5:1 SHALL BE KEYED.

7. THE CONTRACTOR SHALL INFORM THE DPW OF THE LOCATION OF THE DISPOSAL AND/OR BORROW SITE(S) REQUIRED FOR THIS PROJECT WHEN AN APPLICATION FOR A GRADING PERMIT IS MADE. THE DISPOSAL AND/OR BORROW SITE(S) MUST ALSO FULFILL THE REQUIREMENTS OF THE GRADING ORDINANCE.

8. NO GRADING WORK SHALL BE DONE ON SATURDAYS, SUNDAYS, AND HOLIDAYS ANYTIME WITHOUT PRIOR APPROVAL FROM THE ENGINEER. GRADING WORK ON NORMAL WORKING DAYS SHALL BETWEEN THE HOURS OF 7:00 A.M. TO 3:00 P.M.

9. FILLS SHALL BE COMPACTED TO 90 PERCENT (90%) OF MAXIMUM DENSITY PER ASTM D-1557 TEST.

10. THE CONTRACTOR SHALL REMOVE ALL VEGETATION BEFORE PLACING FILLS ON NATURAL GROUND SURFACE.

    ESTIMATED EARTHWORK QUANTITIES:

    TOTAL EXCAVATION: 20 CU. YDS.
    TOTAL EMBANKMENT: 388 CU. YDS.

11. THE QUANTITIES SHOWN ARE FOR GRADING PERMIT PURPOSES ONLY. THE CONTRACTOR SHALL BE RESPONSIBLE FOR DETERMINING THE EXACT QUANTITIES FOR BIDDING PURPOSES.

EARTHWORK QUANTITIES SHOWN WERE TAKEN FROM EXISTING GROUND TO FINISH GRADE.

TOTAL AREA TO BE GRADED 0.22 ACRES

SOLID WASTE CONSTRUCTION NOTES:

1. UNLESS OTHERWISE SPECIFIED, THE CONTRACTOR IS RESPONSIBLE FOR THE PROPER HANDLING, STORAGE AND/OR DISPOSAL OF ALL WASTE GENERATED BY THIS CONSTRUCTION INCLUDING GRUBBING AND EXCESS EXCAVATED MATERIAL. ANY MATERIAL BROUGHT TO THE COUNTY LANDFILLS WILL BE SUBJECTED TO THE INSTITUTED TIPPING FEE SYSTEM, WITH NO EXCEPTIONS OR EXEMPTIONS

2. ALL WASTES GENERATED BY CONSTRUCTION, INCLUDING GRUBBING, DEMOLITION AND EXCESS EXCAVATION MATERIAL MAY BE BROUGHT TO THE WEST HAWAII OR THE HILO LANDFILL. THE CONTRACTOR SHALL CHECK WITH THE SOLID WASTE DIVISION FOR DISCLOSURE OF THE CURRENT LANDFILL FEE AND CONSIDERATION OF THAT FEE SHALL BE INCLUDED IN THE CONTRACTOR'S BID SUM.

3. CONSTRUCTION, DEMOLITION AND GRUBBING MATERIAL SHALL NOT BE DEPOSITED AT ANY OF THE COUNTY TRANSFER STATIONS, BUT SHALL BE TRANSPORTED FOR DISPOSAL AT EITHER THE WEST HAWAII OR HILO LANDFILL.

4. ASBESTOS MATERIAL MUST BE SEPARATED, DOUBLE BAGGED AND LANDFILLED IN ACCORDANCE WITH REGULATIONS OF THE SOLID WASTE DIVISION, DEPARTMENT OF ENVIRONMENTAL MANAGEMENT. INFORMATION MAY BE OBTAINED BY CALLING THE DIVISION AT (808) 961-8339 BETWEEN 7:00 AM AND 4:00 PM MONDAY THROUGH FRIDAY.

5. ALL GREEN WASTE GENERATED FROM GRUBBING WORK, SHALL BE SEPARATED AND DEPOSITED AT THE GREEN WASTE AREA AT THE HILO OR WEST HAWAII DISPOSAL SITE. (NOTE: NO TREATED LUMBER IS ALLOWED IN THE GREEN WASTE)

6. RECYCLE AS MUCH OF THE SOLID WASTE MATERIAL GENERATED BY THIS CONSTRUCTION AS POSSIBLE. EXCESS MATERIAL SHALL BE DISPOSED OF PROPERLY.

7. CONTRACTOR SHALL SUBMIT A REPORT PRIOR TO THE COMMENCEMENT OF WORK, PER SOLID WASTE DEMOLITION PLAN GUIDELINES, AS AMMENDED. AVAILABLE AT THE COUNTY OF HAWAII, DEPARTMENT OF ENVIRONMENTAL MANAGEMENT OFFICE.

NOTES FOR WORK WITHIN THE ROAD-OF-WAY

1. THE CONTRACTOR SHALL VERIFY THE LOCATION OF ALL EXISTING UTILITIES, WHETHER SHOWN ON THE PLAN OR NOT, AND SHALL BE RESPONSIBLE FOR THE REPAIR OR REPLACEMENT OF SAME IN THE EVENT OF DAMAGES DUE TO HIS CONSTRUCTION PARACTICES. THE CONTRACTOR SHALL COORDINATE HIS WORK WITH THE RESPECTIVE UTILITY COMPANIES.

2. THE CONTRACTOR SHALL PROVIDE AND INSTALL ALL TRAFFIC CONTROL DEVICES IN CONFORMANCE WITH THE CURRENT EDITION OF THE "MANUAL ON UNIFORM TRAFFIC CONTROL DEVICES FOR STREETS AND HIGHWAYS," AND AS DIRECTED BY THE ENGINEER.

3. THE PROPOSED UTILITY LINE LOCATION SHALL BE LAID OUT IN THE FIELD PRIOR TO THE CONDUCTING OF THE FIELD REVIEW BY THE ENGINEER.

4. FIELD ADJUSTMENTS SHALL BE MADE AS DIRECTED BY THE ENGINEER PRIOR TO THE COMMENCEMENT OF ANY UTILITY LINE WORK.

5. THE CONTRACTOR SHALL PROVIDE AT LEASE ONE (1) LANE FOR TRAFFIC MOVEMENT AT ALL TIMES. TWO (2) LANES FOR TRAFFIC MOVEMENT SHALL BE PROVIDED BETWEEN THE HOURS OF 3:00 P.M. TO 8:00 A.M.

6. THE EXISTING PAVEMENT SHALL BE SAW-CUT BEFORE COMMENCEMENT OF TRENCHING WORK.

7. ANY PAVEMENT OUTSIDE THE CONTRACT ZONE LIMITS DAMAGED AS A RESULT OF CONSTRUCTION OPERATIONS SHALL BE RESTORED TO ITS ORIGINAL CONDITION, OR BETTER, AS DIRECTED BY THE ENGINEER.

8. A TEMPORARY COLD MIX PATCH SHALL BE APPLIED IMMEDIATELY UPON COMPLETION OF THE BACKFILLING OPERATION AND SHALL BE MAINTAINED BY THE CONTRACTOR UNTIL A PERMANENT PATCH IS AUTHORIZED BY THE ENGINEER.

9. NO MATERIAL, EXCEPT THE TRENCH EXCAVATED MATERIAL, SHALL BE STOCKPILED CLOSER THAN SIX (6) FEET FROM THE EXISTING EDGE OF PAVEMENT.

10. NO CONSTRUCTION EQUIPMENT SHALL BE PARKED WITHIN THE ROAD RIGHT-OF-WAY IN SUCH A MANNER THAT THE EQUIPMENT WILL OBSTRUCT THE NORMAL MOVEMENT AND SIGHT DISTANCE OF THE DRIVING MOTORIST, EXCEPT DURING ACTUAL WORKING HOURS.

11. EXCEPT DURING ACTUAL WORKING HOURS, ALL SIGNS THAT DO NOT PERTAIN TO THE CONSTRUCTION ACTIVITY, SUCH AS "MEN WORKING" AND "FLAGMAN AHEAD" SHALL BE COVERED OR LAID DOWN. HOWEVER, ALL SIGNS NECESSARY FOR THE SAFETY OF THE PUBLIC SHALL BE MAINTAINED.

12. ANY PAVEMENT MARKINGS, STRUCTURES, AND APPURTENANCES (WITHIN OR OUTSIDE OF THE CONTRACT ZONE LIMITS) DAMAGED AND/OR WORN AWAY UNDER THE PERMIT SHALL BE REPAINTED OR RECONSTRUCTED AS DIRECTED BY THE ENGINEER.

13. NO TRENCHING SHALL BE LEFT OPEN FOR MORE THAN FIVE (5) WORKING DAYS.

14. SHOULD TRENCING OCCUR THROUGH AN EXISTING SIDEWALK, OR SHOULD DAMAGES OCCUR TO THE SIDEWALK AS A RESULT OF ANY CONSTRUCTION WORK, THE FOLLOWING PROCEDURE SHALL BE UTILIZED TO REPAIR THE SIDEWALK:

    A. ALL PORTLAND CEMENT CONCRETE TO BE REMOVED SHALL FIRST BE CUT WITH A CONCRETE SAW THAT HAS A DIAMOND OR CARBORUNDUM ABRASIVE WHEEL. THOSE CUTS SHALL BE MADE TO A DEPTH EQUAL TO AT LEAST ONE-FOURTH OF THE DEPTH OF THE SLAB, OR ENOUGH AS IS DEEMED NECESSARY BY THE DEPARTMENT OF PUBLIC WORKS, TO PERMIT BREAKING OUT THE BALANCE OF THE CONCRETE WITHOUT SPALLING OFF THE EXPOSED EDGES OF THE SLAB LEFT IN PLACE.

    B. IF ANY CONCRETE BLOCK IS TOUCHED, THE WHOLE BLOCK SHALL BE REMOVED AND LATER REPLACED, UNLESS A MINOR VARIATION IS AUTHORIZED BY THE DPW OR IT'S REPRESENTATIVE.

    C. ANY DAMAGES TO ADJACENT AREAS DUE TO SETTLEMENT OR TO ANY OTHER EFFECTS WHATSOEVER CAUSED BY THE CONSTRUCTION WORK SHALL BE PROPERLY REPAIRED AND CORRECTED.

STRUCTURAL BEST MANAGEMENT PRACTICES (BMPS):

1. THE CONTRACTOR SHALL INSPECT EROSION AND SEDIMENT CONTROL MEASURES WEEKLY AND AFTER 0.5 INCHES OF RAINFALL.

2. IF REPAIRS TO OR MAINTENANCE OF THE CONTRACTOR'S EROSION CONTROL MEASURES ARE NECESSARY, THE CONTRACTOR SHALL INITIATE THE REPAIRS OR MAINTENANCE WITHIN TWENTY-FOUR (24) HOURS AFTER INSPECTION AND NOTING OF THE DEFICIENCY.

    REPAIRS AND MAINTENANCE MAY INCLUDE THE FOLLOWING:

    A. REPLACING GEO-JUTE FABRIC WHEN TEARS ARE FOUND, AND ENSURING THAT THE FABRIC IS SECURELY ATTACHED FIRMLY IN THE GROUND.

    B. RESTORING BARE SPOTS AND WASHOUTS, AND ENSURING HEALTY PLANT GROWTH IN BOTH TEMPORARY AND PERMANENT SEEDED AND PLANTED AREAS.

3. THE CONTRACTOR SHALL MAKE EVERY EFFORT TO INSTALL STRUCTURAL BMPS AS NEAR TO THE POLLUTANT SOURCE AS PRACTICABLE. INLET PROTECTION SHALL SERVE AS THE LAST MEASURE TO PREVENT POLLUTANTS FROM ENTERING THE STORM DRAIN SYSTEM.

4. THE CONTRACTOR SHALL BACKFILL TRENCHES AND PROVIDE COLD MIX PATCHES TO MATCH ADJOINING PAVEMENT GRADE AT THE END OF EACH WORK DAY.

5. STABILIZED CONSTRUCTION ENTRANCE:

    ALL POINTS OF EGRESS AND INGRESS TO A SITE SHALL BE PROTECTED WITH A STABILIZED CONSTRUCTION ENTRANCE, 20' X 20' X 8" THICK CRUSHED ROCK LAYER OVER A GEOTEXTILE FABRIC BASE IN THE LOCATION(S) SHOWN ON THE EROSION CONTROL PLAN.

6. DUST CONTROL:

    DUST CONTROL, INCLUDING DUST BARRIERS, WATERING, ETC., SHOULD BE APPLIED TO REDUCE DUST EMISSIONS. THE CONTRACTOR, AT HIS OWN EXPENSE, SHALL KEEP THE PROJECT AREA AND SURROUNDING AREA FREE FROM DUST NUISANCE. THE WORK SHALL BE IN CONFORMANCE WITH THE AIR POLLUTION CONTROL STANDARDS CONTAINED IN HAWAII ADMINISTRATIVE RULES: CHAPTER 11-60, "AIR POLLUTION CONTROL",

7. SEDIMENT BARRIERS OR TRAPS:

    SEDIMENT TRAPPING DEVICES SUCH AS FENCES, TRAPS, BASINS OR BARRIERS SHALL BE USED DOWN SLOPE OF ALL DISTURBED AREAS AND AROUND THE BASE OF ALL MATERIAL STOCKPILES.

8. INLET PROTECTION:

    ALL STORM DRAIN INLETS ON SITE, AND THOSE OFFSITE WHICH MAY RECEIVE RUNOFF FROM THE SITE SHALL USE AN INLET PROTECTION DEVICE.

9. PERMANENT STABILIZATION:

    ALL DISTURBED AREAS SHALL BE PERMANENTLY STABILIZED PRIOR TO REMOVING EROSION AND SEDIMENT MEASURES. ALL TEMPORARY EROSION AND SEDIMENT CONTROL MEASURES SHALL BE REMOVED WITHIN 30 DAYS AFTER FINAL SITE STABILIZATION OR AFTER THE TEMPORARY MEASURES ARE NO LONGER NEEDED. TRAPPED SEDIMENT AND AREAS OF DISTURBED SOIL WHICH RESULT FROM THE REMOVAL OF THE TEMPORARY MEASURES SHALL BE IMMEDIATELY PERMANENTLY STABILIZED.

LEGEND:

A.C.	ASPHALT CONCRETE
ARV	AIR RELEASE VALVE
BOT.	BOTTOM
BW	BOTTOM WALL
C.O.	CLEAN OUT
COCN.	CONCRETE
CRM	CONCRETE RUBBLE MASONARY
D	DIAMETER OR DRAIN
E/ELEC.	ELECTRIC
ELEV./E	ELEVATION
FFE	FINISH FLOOR ELEVATION
F.H.	FIRE HYDRANT
G.P.	GUARD POST/GUY POLE/GATE POST
H	HEIGHT
IG	INVERT GRADE
INV.	INVERT
M.B.	MAIL BOX
MH	MANHOLE
MON	MONUMENT
NIC	NOT IN CONTRACT
OH	OVERHEAD
PAV'T	PAVEMENT
PE	PAD ELEVATION
S	SEWER OR SPREAD
SDMH	STORM DRAIN MANHOLE
SMH	SEWER MANHOLE
SS	SANITARY SEWER
ST.	STREET
STA.	STATION
TB	TOP OF BOX
TG	TOP OF GRATE
TP	TOP PIPE
TS	TOP STEM
TV	TOP VALVE
TW	TOP WALL
U.P.	UTILITY POLE
U.P./S.L.	UTILITY POLE W/STREET LIGHT
W	WATER
WM	WATER METER
WMH	WATER MANHOLE
WV	WATER VALVE BOX

No.	DATE	DWG.	CHK.	REVISIONS
1				
2				
3				

PRINTS TO

DATE

This work was prepared by me or under my supervision and construction of this project is under my observation. Exp. 04-30-16

Wesley R. Segawa & Associates, Inc.

DENNIS K.W. LEE LICENSED PROFESSIONAL ENGINEER No. 4004-C HAWAII U.S.A.

WRSA
Wesley R. Segawa and Associates, Inc.
Committed to Quality Performance & Value
Civil & Structural Engineers
101 Silva Street, Suite 201 Hilo, Hawaii 96720-4755
Telephone: (808) 935-4677 Fax: (808) 935-2070

Project Title: KEAUKAHA TRACT 1 IMPROVEMENTS
LOTS 131-A-1, 131-A-2 & 131-A-3

Sheet Title: MISCELLANEOUS NOTES

DESIGN BY:	DRB
DRAWN BY:	DRB
CHECKED BY:	DL
APPROVED BY:	DL
DATE:	2015
SCALE:	AS NOTED
FILE No.	W1302.43

DRAWING No. C-1

SHEET No. 2 OF 14 SHTS.

UTILITY POLE SPECIFICATIONS AND NOTES:

MAXIMUM-200 AMP SERVICE

IT SHALL BE THE CUSTOMER'S RESPONSIBILITY FOR COMPLIANCE WITH THE NATIONAL ELECTRICAL CODE AND ANY GOVERNING AUTHORITY FOR ALL EQUIPMENT BEYOND THE POINT OF CONNECTION. THE CUSTOMER IS ADVISED TO USE THE SERVICES OF A QUALIFIED ELECTRICIAN TO ASSURE COMPLIANCE WITH ALL CODES AND REGULATIONS.

1. DESCRIPTION:

   PERMANENT - MOBILE HOMES, CAMPS, WATER WELLS, AND ANY OTHER CONNECTION NOT CONSIDERED TEMPORARY.

   TEMPORARY - CONSTRUCTION, SPECIAL EVENTS, ETC.

2. METER POLES ARE FURNISHED AND INSTALLED BY CUSTOMER. SPECIFICATIONS SHOWN ON THE DRAWING AND DESCRIBED HERE SHALL BE CONSIDERED MINIMUM REQUIREMENTS.

3. PERMANENT METER POLES MUST BE 20' (FEET) IN LENGTH AND BE SET 5' (FEET) DEEP. A PERMANENT METER POLE MUST BE A TREATED ROUND POLE WITH A MINIMUM TOP DIAMETER OF 5" (INCHES) OR A TREATED 6" X 6" (INCH) POLE.

   IT WILL BE THE RESPONSIBILITY OF THE CUSTOMER TO SECURE THE POLE IN A VERTICAL POSITION. IF THE GROUND IS NOT ADEQUATE TO SUPPORT THE POLE, A GUY WILL HAVE TO BE INSTALLED BY THE CUSTOMER.

4. TEMPORARY METER POLES MUST BE 16' (FEET) IN LENGTH AND BE SET 4' (FEET) DEEP. A TEMPORARY METER POLE MUST BE A TREATED POLE WITH A MINIMUM SIZE OF 4" X 6" (INCHES). A TEMPORARY METER POLE WITH A SERVICE LENGTH OF 75' (FEET) OR GREATER MUST BE BRACED AS SHOWN ON THE TEMPORARY METER POLE DRAWING.

5. SERVICE ENTRANCE CONDUIT FURNISHED AND INSTALLED BY CUSTOMER. SERVICE ENTRANCE CONDUIT SHALL BE SCHEDULE 40 PVC OR RIGID CONDUIT, NO EMT, AND SHALL BE SIZED IN ACCORDANCE WITH THE NATIONAL ELECTRICAL CODE OR GOVERNING AUTHORITY. A MINIMUM OF 3 CONDUIT STRAPS ARE REQUIRED, WITH ONE (1) STRAP BEING NO MORE THAN 12" (INCHES) FROM THE WEATHER HEAD.

6. SERVICE ENTRANCE CONDUCTORS FROM THE POINT OF CONNECTION TO METER BASE, TO THE MAIN DISCONNECT, FURNISHED AND INSTALLED BY CUSTOMER.

   SERVICE ENTRANCE CONDUCTORS SHALL BE COPPER ONLY AND SIZED ACCORDING TO LOAD, AS REQUIRED BY THE NATIONAL ELECTRIC CODE OR GOVERNING AUTHORITY.

   THE NEUTRAL OF THE SERVICE ENTRANCE CONDUCTORS CAN BE TWO (2) SIZES SMALLER THAN THE OTHER CONDUCTORS AND SHALL BE IDENTIFIED WITH GRAY AND WHITE TAPE AT THE WEATHER HEAD AND IN THE METER BASE. AN EXTENSION OF 18" (INCHES) OF SERVICE CONDUCTOR IS REQUIRED AT THE WEATHER HEAD.

7. MAIN DISCONNECT, EITHER A SINGLE MAIN OR A MAIN IN A DISTRIBUTION PANEL, FURNISHED AND INSTALLED BY CUSTOMER. MAIN DISCONNECT SHALL BE SIZED ACCORDING TO LOAD, AS REQUIRED BY THE NATIONAL ELECTRICAL CODE OR GOVERNING AUTHORITY.

   MAIN DISCONNECTS AND ANY OTHER ELECTRICAL EQUIPMENT THAT IS EXPOSED TO THE ELEMENTS MUST BE OF A WEATHERPROOF AND WATER TIGHT DESIGN.

8. METER BASE AND K-10 SERVICE HOLDER TO BE FURNISHED AND INSTALLED BY CUSTOMER. THEY MUST CONFORM TO HELCO STANDARDS AND BE COMPATIBLE WITH HELCO METERING. THE METER BASE SHALL BE MOUNTED BETWEEN 5' AND 6' (FEET) ABOVE FINISHED GRADE. THE K10C SHALL BE MOUNTED 6" (INCHES) FROM THE TOP OF THE METER POLE IN THE DIRECTION OF HELCO'S SERVICE CABLE. PRE-DRILLING A PILOT HOLE FOR THE K10C IS RECOMMENDED.

9. A METER BASE GROUND SHALL EXTEND FROM THE NEUTRAL OR GROUNDING LUG IN THE METER BASE TO GROUND ROD. THE METER BASE GROUND SHALL BE A MINIMUM #6, SOFT DRAWN COPPER WIRE. THE METER BASE GROUND WIRE MUST BE CONNECTED IN THE GROUND WIRE LUG, WHERE PROVIDED, AND NOT IN THE SERVICE NEUTRAL LUG. THE METER BASE GROUND WIRE MUST BE STAPLED EVERY SIX (6) INCHES.

10. THE POLE GROUNDING CONDUCTOR SHALL BE A MINIMUM #6, BARE, SOFT DRAWN COPPER WIRE AND EXTEND FROM 6" (INCHES) ABOVE THE TOP OF THE METER POLE TO THE GROUND ROD. IT IS INSTALLED 90 AROUND THE POLE TO THE GROUND ROD. IT IS INSTALLED 90 AROUND THE POLE FROM THE SERVICE ENTRANCE CONDUIT. THE POLE GROUNDING CONDUCTOR MUST BE STAPLED, STARTING FROM THE TOP OF THE POLE AT 2' (FOOT) INTERVALS UNTIL A POINT 6' (FEET) ABOVE THE GROUND IS REACHED, THEN STAPLED EVERY 6" (INCHES).

11. GROUND RODS SHALL BE 5/8" X 8" COPPER WELD OR 1/2" X 8' COPPER. PERMANENT METER POLE GROUND RODS SHALL BE SET 1" (INCH) BELOW FINISHED GRADE.

    TEMPORARY METER POLE GROUND RODS CAN BE SET 4" (INCHES) ABOVE FINISHED GRADE.

12. ALL UNUSED OR OPEN HOLES IN THE METER BASE, MAIN DISCONNECTOR DISTRIBUSTION PANEL SHALL BE PLUGGED WITH WATERTIGHT PLUGS.

13. INSPECTION: IF A GOVERNING AUTHORITY REQUIRES INSPECTION, INSPECTION TAG MUST BE IN PLACE AND MARKED APPROVED BEFORE HELCO WILL CONNECT SERVICE.

NOTES:
1. Posts and braces shall be Schedule 40 (standard weight) pipe. Sizes specified are outside diameter.
2. All fencing material shall be galvanized steel.
3. Top rail couplings shall be located within 6" of line posts.
4. Top of concrete footing shall be crowned to shed water.

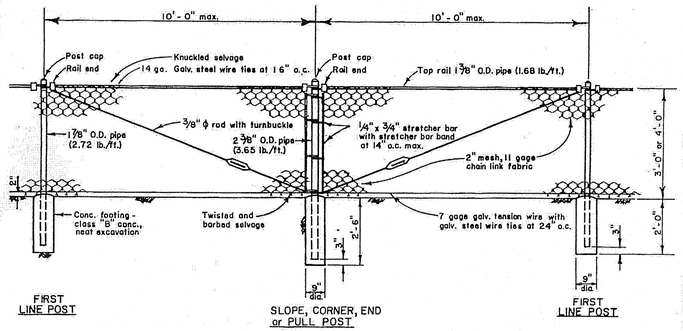

1 / C-2 **4' CHAIN LINK FENCE**
SCALE: NONE

REVISIONS

No.	DATE	DWG.	CHK.

PRINTS TO DATE

This work was prepared by me or under my supervision and to the best of my knowledge it conforms to applicable codes and standards. This project will be under my observation. Exp. 04-30-16

Wesley R. Segawa & Associates, Inc.

K. W. LEE LICENSED PROFESSIONAL ENGINEER No. 4004-C DENNIS HAWAII

WRSA
Wesley R. Segawa and Associates, Inc
Committed to Quality Performance & Value
Civil & Structural Engineers
101 Silva Street, Suite 201 Hilo, Hawaii 96720-4755
Telephone: (808) 935-4677 Fax: (808) 935-2070

Project Title: KEAUKAHA TRACT 1 IMPROVEMENTS
LOTS 131-A-1, 131-A-2 & 131-A-3

Sheet Title: MISCELLANEOUS NOTES

DESIGN BY:	DRB
DRAWN BY:	DRB
CHECKED BY:	DL
APPROVED BY:	DL
DATE:	2015
SCALE:	AS NOTED
FILE No.	W1302.43

DRAWING No. C-2

SHEET No. 3 OF 14 SHTS.

WATERLINE NOTES:

1. ALL WORK SHALL BE DONE ACCORDING TO THE WATER SYSTEM STANDARDS, STATE OF HAWAII, DATED 2002, AS AMENDED.
2. ALL EXISTING WATERLINES, WATERLINE, APPURTENANCES AND OTHER UTILITY LOCATIONS SHOWN ON THE PLANS ARE OBTAINED FROM THE LATEST RELIABLE SOURCES. THE CONTRACTOR SHALL BE RESPONSIBLE TO VERITY THE EXACT LOCATION OF ALL UTILITIES IN THE FIELD AND SHALL BEAR ALL COSTS FOR DAMAGE DONE DURING THE CONTRACT PERIOD.
3. THE CONTRACTOR SHALL INFORM THE D.W.S. ENGINEER 72 HOURS PRIOR TO THE BEGINNING OF ANY WATERLINE WORK AND TWO WEEKS PRIOR TO ANY CONNECTION, CHLORINATION, SHUT-OFF OR RELOCATION WORK.
4. ALL CONNECTIONS TO THE WATER SYSTEMS SHALL BE DONE BY THE D.W.S. THE CONTRACTOR SHALL PERFORM ALL EXCAVATION, BACKFILL, ROAD REPAIR, TRAFFIC CONTROL, AND PROVIDE EQUIPMENT AND MATERIALS NECESSARY TO COMPLETE THE CONNECTION.
5. THE CONTRACTOR SHALL PAY FOR ALL WORK, EQUIPMENT, AND MATERIAL FURNISHED BY THE D.W.S.
6. MINIMUM VERTICAL CLEARANCE BETWEEN WATERLINES AND OTHER UTILITIES SHALL BE 12-INCHES PROVIDED THE OTHER UTILITY IS CONCRETE JACKETED, AND 18-INCHES IF NO CONCRETE JACKETS ARE USED. IN ALL APPLICABLE INSTANCES, THE WATERLINES SHALL BE AT A GRADE HIGHER THAN OTHER UTILITIES. UTILIZE PERPENDICULAR CROSSINGS WHERE PRACTICABLE FOR WATERLINES, CENTER FULL PIPE LENGTHS AT UTILITY CROSSINGS WHENEVER POSSIBLE
7. MINIMUM HORIZONTAL CLEARANCE BETWEEN WATERLINES AND OTHER UTILITIES SHALL BE 8-FEET (CLEAR SPACE – NOT CENTERLINE TO CENTERLINE) FOR ROAD RIGHT-OF-WAYS OF 50 FEET OF LESS, AND 10-FEET FOR ROAD RIGHT-OF-WAYS OF MORE THAN 50 FEET.
8. ALL WATER SYSTEM PIPELINES, 4-INCHES OR LARGER IN DIAMETER, SHALL BE DUCTILE IRON, PUSH ON JOINTS, CLASS 52, AND ALL PIPELINES SMALLER THAN 4-INCHES IN DIAMETER SHALL BE SOFT COPPER, TYPE "K:, UNLESS OTHERWISE SPECIFIED.
9. PIPE CUSHION FOR COPPER SERVICE LATERALS SHALL BE NO. 4 MANUFACTURED FINE SAND.
10. METER BOXES FOR 5/8-INCH METERS PLACED OUTSIDE OF PAVEMENT TO BE TYPE "B" PER STD DETAILS M1 & M2. METER BOXES FOR 1-INCH METERS OR FOR 5/8-INCH STD DETAIL M3.
11. RELOCATION OF EXISTING METERS SHALL BE DONE UNDER D.W.S. SUPERVISION. RELOCATION OF CUSTOMER SERVICE LINES TO RELOCATED METERS SHALL BE COPPER (TYPE "K") AND DONE BY THE CONTRACTOR. ALL WORK AND MATERIALS SHALL BE PROVIDED BY THE CONTRACTOR AND CONSIDERED INCIDENTAL TO THE RELOCATION WORK. EXISTING METER BOXES DAMAGED BY THE CONTRACTOR SHALL BE REPLACED AT THE CONTRACTOR'S COST. WHEN APPLICABLE, A DIELECTRIC UNION SHALL BE USED TO CONNECT THE COPPER PIPE TO THE CUSTOMER'S GALVANIZED IRON (G.I.) PIPE.
12. SOLDER (1/8-INCH DIA.) AND FLUX USED SHALL NOT CONTAIN MORE THAN 0.2% LEAD
13. LOTS REQUIRING A DEPARTMENT OF WATER SUPPLY APPROVED BACKFLOW PREVENTION ASSEMBLY SHALL HAVE ONE. IT MUST BE INSTALLED ON PRIVATE PROPERTY IN ACCORDANCE WITH D.W.S. STANDARD DETAIL NO. V9 AND DEPARTMENTAL STAFF MUST APPROVE THE INSTALLATION BEFORE WATER SERVICE CAN BE STARTED.
14. WHERE WATER SHUT-OFF OF MORE THAN 3 HOURS BECOMES NECESSARY, THE CONTRACTOR, AT HIS OWN EXPENSE, SHALL PROVIDE A TEMPORARARY BY-PASS LINE. THE DWS ENGINEER SHALL DETERMINE THE BY-PASS LINE SIZE. IF NECESSARY, THE DWS ENGINEER MAY REQUIRE A BY-PASS LINE, REGARDLESS OF THE EXPECTED SHUT-OFF PERIOD.
15. THE CONTRACTOR SHALL BE RESPONSIBLE FOR RECORD DRAWINGS (AS-BUILT DRAWINGS) AND THE LICENSED ENGINEER SHALL CERTIFY THE DRAWINGS AS TO ACCURACY AND SUBMIT THE DRAWINGS AND AS-BUILT TRACINGS TO THE DWS.
16. AFTER JANUARY 4, 2014, ALL BRASS PRODUCTS MUST CONFORM TO NSF STANDARD 61 AND NSF STANDARD 372 OF THE SDWA, AND BE CERTIFIED AS "LEAD-FREE" BY THE MANUFACTURER. "LEAD-FREE" IS DEFINED AS THE ALLOWABLE LEAD CONTENT OF NOT MORE THAN 0.25% IN THE WETTED SURFACE. CERTIFICATION FROM THE MANUFACTURER MUST BE SUBMITTED TO THE DEPARTMENT OF WATER SUPPLY FOR REVIEW AND APPROVAL PRIOR TO INSTALLATION. ANY BRASS PRODUCT INSTALLED WITHOUT APPROVAL MUST BE REMOVED AT NO EXPENSE TO THE DEPARTMENT.
17. BOXED WATERLINE DETAILS BELOW TAKEN FROM THE WATER SYSTEM STANDARDS.

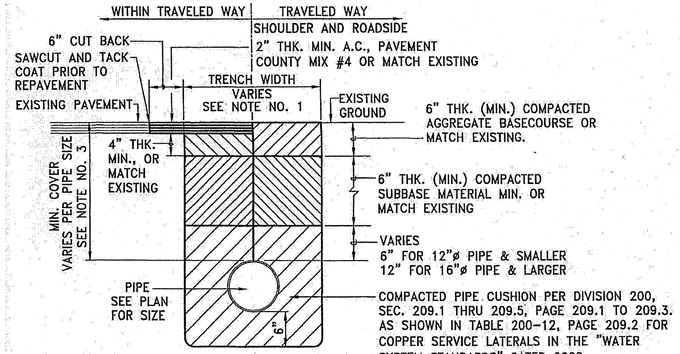

NOTES:

1. SEE TABLE 300-1, PAGE 302-3, WATER SYSTEM STANDARDS, 2002.
2. LOCAL MATERIAL MAY BE USED OUTSIDE SHOULDER AREA.
3. SEE TABLE 100-3, PAGE 102.4, WATER SYSTEM STANDARDS, 2002.
4. DRIVEWAY RESTORATION
   A. WHERE EXISTING DRIVEWAY IS CONCRETE, 4" THK. CONCRETE REINFORCED WITH 6 X 6 X 10/10 WWM ON 4" THK. BASECOURSE SHALL BE USED IN LIEU OF THE ABOVE SECTION.
   B. WHERE AN EXISTING DRIVEWAY IS UNPAVED, THE DRIVEWAY SHALL BE RESTORED TO A CONDITION EQUAL TO OR BETTER THAN THE EXISTING DRIVEWAY.
   C. WHERE EXISTING DRIVEWAY IS PAVED, THE DRIVEWAY SHALL BE RESTORED AS SHOWN ABOVE
   D. CONTRACTOR SHALL NOTIFY THE OWNER OF THE DRIVEWAY 48 HOURS BEFORE COMMENCEMENT OF ANY WORK.

1 / C-3 TYPICAL TRENCH AND PAVEMENT REPAIR SECTION FOR WATERLINES
NOT TO SCALE

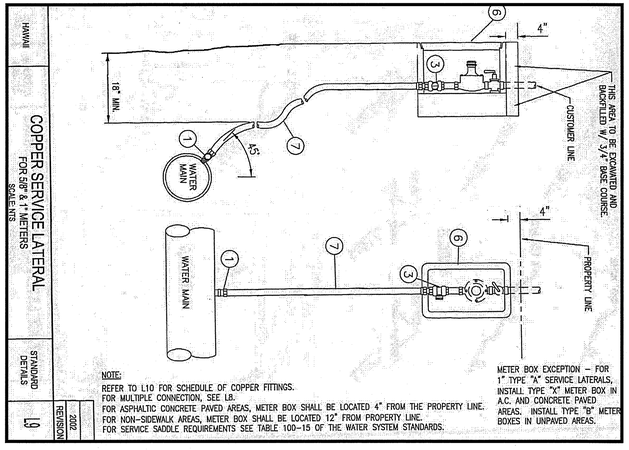

2 / C-3 TYPICAL SINGLE SERVICE LATERAL
NOT TO SCALE

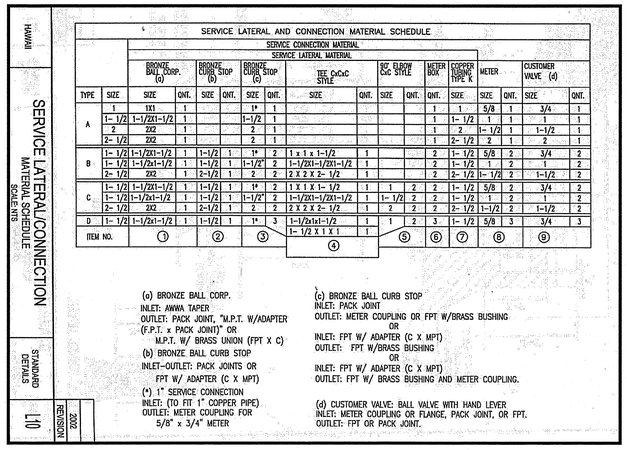

SERVICE LATERAL AND CONNECTION MATERIAL SCHEDULE

		SERVICE CONNECTION MATERIAL: SERVICE LATERAL MATERIAL: BRONZE BALL CORP. (a)		BRONZE CURB STOP (b)		BRONZE CURB STOP (c)		TEE CxCxC STYLE		90° ELBOW CxC STYLE		METER BOX	COPPER TUBING TYPE 'K'		METER		CUSTOMER VALVE (d)	
TYPE	SIZE	SIZE	QNT.	SIZE	QNT.	SIZE	QNT.	SIZE	QNT.	SIZE	QNT.	QNT.	SIZE	SIZE	QNT.	SIZE	QNT.
A	1	1X1	1			1*	1					1	1	5/8	1	3/4	1
	1- 1/2	1-1/2X1-1/2	1			1-1/2	1					1	1- 1/2	1	1	1	1
	2	2X2	1			2	1					1	2	1- 1/2	1	1-1/2	1
	2- 1/2	2X2	1			2	1					1	2- 1/2	2	1	2	1
B	1- 1/2	1-1/2X1-1/2	1	1-1/2	1	1*	2	1 x 1 x 1-1/2	1			2	1- 1/2	5/8	2	3/4	2
	1- 1/2	1-1/2x1-1/2	1	1-1/2	1	1-1/2"	2	1-1/2X1-1/2X1-1/2	1			2	1- 1/2	1	2	1	2
	2- 1/2	2X2	1	2-1/2	1	2	2	2 X 2 X 2- 1/2	1			2	2- 1/2	1- 1/2	2	1-1/2	2
C	1- 1/2	1-1/2X1-1/2	1	1-1/2	1	1*	2	1 X 1 X 1- 1/2	1	1	2	2	1- 1/2	5/8	2	3/4	2
	1- 1/2	1-1/2x1-1/2	1	1-1/2	1	1-1/2"	2	1-1/2X1-1/2X1-1/2	1	1- 1/2	2	2	1- 1/2	1	2	1	2
	2- 1/2	2X2	1	2-1/2	1	2	2	2 X 2 X 2- 1/2	1	2	2	2	2- 1/2	1-1/2	2	1-1/2	2
D	1- 1/2	1-1/2x1-1/2	1	1-1/2	1	1*	3	1-1/2x1x1-1/2	1	1	2	3	1- 1/2	5/8	3	3/4	3
								1- 1/2 X 1 X 1	1								
ITEM NO.		①		②		③		④		⑤		⑥	⑦	⑧		⑨	

(a) BRONZE BALL CORP.
INLET: AWWA TAPER
OUTLET: PACK JOINT, "M.P.T. W/ADAPTER (F.P.T. x PACK JOINT)" OR
M.P.T. W/ BRASS UNION (FPT X C)

(b) BRONZE BALL CURB STOP
INLET-OUTLET: PACK JOINTS OR
FPT W/ ADAPTER (C X MPT)

(*) 1" SERVICE CONNECTION
INLET: (TO FIT 1" COPPER PIPE)
OUTLET: METER COUPLING FOR 5/8" x 3/4" METER

(c) BRONZE BALL CURB STOP
INLET: PACK JOINT
OUTLET: METER COUPLING OR FPT W/BRASS BUSHING
OR
INLET: FPT W/ ADAPTER (C X MPT)
OUTLET: FPT W/BRASS BUSHING
OR
INLET: FPT W/ ADAPTER (C X MPT)
OUTLET: FPT W/ BRASS BUSHING AND METER COUPLING.

(d) CUSTOMER VALVE: BALL VALVE WITH HAND LEVER
INLET: METER COUPLING OR FLANGE, PACK JOINT, OR FPT.
OUTLET: FPT OR PACK JOINT.

3 / C-3 SCHEDULE OF COPPER FITTINGS
NOT TO SCALE

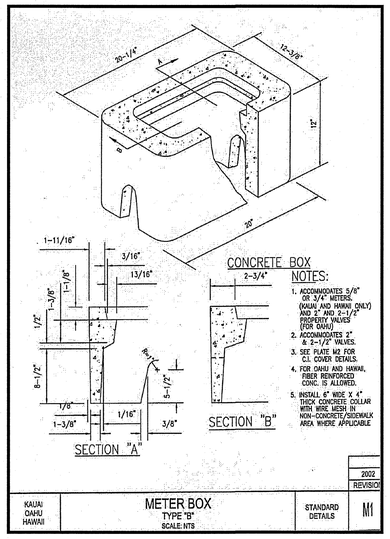

4 / C-3 METER BOX TYPE "B"
NOT TO SCALE

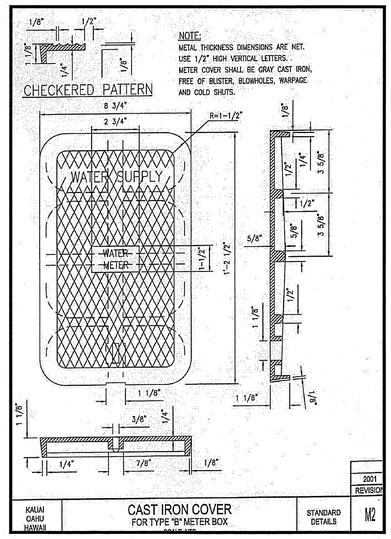

5 / C-3 CAST IRON COVER FOR TYPE "B" METER BOX
NOT TO SCALE

No.	DATE	REVISIONS	DWG. CHK.	PRINTS TO	DATE

This work was prepared by me or under my supervision and construction of this project will be under my observation.
Exp. 04-30-16
Wesley R. Segawa & Associates, Inc.

DENNIS K. W. LEE LICENSED PROFESSIONAL ENGINEER No. 4004-C HAWAII U.S.A.

WRSA
Wesley R. Segawa and Associates, Inc.
Committed to Quality Performance & Value
Civil & Structural Engineers
101 Silva Street, Suite 201 Hilo, Hawaii 96720-4755
Telephone: (808) 935-4677 Fax: (808) 935-2070

Project Title: KEAUKAHA TRACT 1 IMPROVEMENTS
LOTS 131-A-1, 131-A-2 & 131-A-3

Sheet Title: WATER NOTES & DETAILS

DESIGN BY:	DRB
DRAWN BY:	DRB
CHECKED BY:	DL
APPROVED BY:	DL
DATE:	2015
SCALE:	AS NOTED
FILE No.	W1302.43

DRAWING No. C-3

SHEET No. 4 OF 14 SHTS.

WASTEWATER COLLECTION SYSTEM NOTES:

1. THE GENERAL REQUIREMENTS AND COVENANTS OF THE DEPARTMENT OF PUBLIC WORKS, COUNTY OF HAWAI'I (JULY 1972): THE STANDARD SPECIFICATIONS FOR PUBLIC WORKS CONSTRUCTION (SEPTEMBER 1986), THE STANDARD DETAILS FOR PUBLIC WORKS CONSTRUCTION, DEPARTMENT OF PUBLIC WORKS, COUNTY OF HAWAI'I, SEPTEMBER 1984 AND THE COUNTY OF HAWAI'I", DEPARTMENT OF ENVIRONMENTAL MANAGEMENT, WASTEWATER DIVISION (WWD) STANDARD DETAILS (WW-1 THRU WW-9) SHALL BE APPLICABLE AND INCORPORATED HEREIN UNLESS OTHERWISE NOTED.
2. THE CONTRACTOR SHALL PROCURE ALL PERMITS AND LICENSES, PAY ALL CHARGES AND FEES AND GIVE ALL NOTICES NECESSARY AND INCIDENTAL TO THE DULY AND LAWFUL PROSECUTION OF THE WORK.
3. THE CONTRACTOR SHALL FURNISH ALL LABOR, MATERIALS, AND EQUIPMENT REQUIRED FOR THE COMPLETE INSTALLATION OF THE SUBJECT WORK UNLESS SPECIFICALLY WRITTEN OTHERWISE.
4. IT SHALL BE THE CONTRACTOR'S RESPONSIBILITY TO PERFORM A CONSTRUCTION PER THE APPROVED PLANS AND SPECIFICATIONS. ANY ADDITIONS, DELETIONS OR CHANGES TO THE WASTEWATER SYSTEM SHALL MEET THE APPROVAL OF THE COUNTY OF HAWAI'I, DEPARTMENT OF ENVIRONMENTAL MANAGEMENT, WASTEWATER DIVISION.
5. INSPECTIONS SHALL BE REQUIRED FOR ALL WORK WHICH INVOLVES THE WWO'S SEWER MAINS, LATERALS, CLEANOUTS, AND ALL DETECTABLE NEW CONSTRUCTION. CALL THE WASTEWATER DIVISION AT 961-8338 AT LEAST TWO (2) WORKING DAYS IN ADVANCE TO SCHEDULE AN INSPECTION.
   a. WHEN AND AS OFTEN AS THE WWD DETERMINES THROUGH THEIR INSPECTION PROCEDURES, MATERIAL, EQUIPMENT OR WORKMANSHIP DO NOT MEET THE REQUIREMENTS, THE WWD WILL GIVE WRITTEN NOTICE OF THE NONCOMPLIANCE TO THE CONTRACTOR AND IMMEDIATE CORRECTION OF THE DEFICIENCIES SHALL BE ADDRESSED WITH THE WWD ENGINEER AND/OR THEIR REPRESENTATIVE.
   b. INSPECTION SHALL BE PERFORMED PRIOR TO BACKFILLING OR COVERING OF THE PIPE AND AFTER ALL PLUMBING WORK, IN ACCORDANCE WITH THE PLUMBING PERMIT, IS COMPLETE WITHIN THE PARCEL.
6. SEWER WORK SHALL BE SCHEDULED SUCH THAT WORK SHALL NOT BE PERFORMED ON SATURDAYS, SUNDAYS OR COUNTY OF HAWAII HOLIDAYS. IT SUCH WORK DICTATES PERFORMANCE ON THESE NON-WORKING DAYS AND AFTER NORMAL HOURS (3:30 PM TO 7:00 AM) OF OPERATION THEN, THE CONTRACTOR SHALL BE RESPONSIBLE FOR PAYMENT OF OVERTIME CHARGES TO THE WWD.
7. ALL EXISTING WASTEWATER LINE(S), WHETHER OR NOT SHOWN ON THE PLANS, IF DAMAGED DURING CONSTRUCTION, SHALL BE REPAIRED BY THE CONTRACTOR AND THE CONTRACTOR SHALL PAY ALL EXPENSES.
8. BYPASSING OR SPILLING OF SEWAGE TO THE GROUND, DRAINAGE SYSTEM OR STATE WATERS IS PROHIBITED. THE CONTRACTOR SHALL PAY PENALTIES, INCLUDING LEGAL FEES AND OTHER COSTS RELATED TO THE BYPASS AND/OR SPILL.
9. THE CONTRACTOR SHALL BE OR HAVE IN PERSON ON THE JOB SITE OR BE REPRESENTED BY A RESPONSIBLE AGENT WITH AUTHORITY TO ACT FOR THE CONTRACTOR IN CONNECTION WITH THIS PROJECT AT ALL TIMES.
10. AT ALL TIMES DURING THE WORK, KEEP THE PREMISES CLEAN AND ORDERLY, AND UPON COMPLETION OF THE WORK, REPAIR ALL DAMAGE CAUSED BY EQUIPMENT AND LEAVE THE PROJECT FREE OF RUBBISH AND EXCESS MATERIALS OF ANY KIND.

SEWER SYSTEM REQUIREMENTS

1. SEWER MAIN PIPE AND FITTINGS:
   a. ALL SEWER PIPE AND FITTINGS SHALL BE PVC SDR-26 BELL AND SPIGOT OR AN APPROVED EQUAL.
   b. LAYING OF PIPE SHALL COMMENCE AT THE LOWEST POINT, THE BELL END FACING UPSTREAM. PIPE SHALL BE FITTED TOGETHER AND MATCHED SO THAT WHEN LAID IT WILL FORM A UNIFORM AND SMOOTH INVERT.
   c. THE INTERIOR OF THE SEWER PIPE SHALL BE CLEARED OF ALL DEBRIS AND FOREIGN MATERIALS AS THE WORK PROGRESSES. EXPOSED ENDS OF SEWER PIPE SHALL BE CLOSED WITH TEMPORARY COVERS TO PREVENT EARTH AND DEBRIS FROM ENTERING THE PIPE BEFORE LEAVING THE WORKPLACE FOR THE NIGHT.
   d. BECAUSE OF THE NATURE OF PLASTIC PIPE AND FILLINGS, THE CONTRACTOR IS CAUTIONED TO EXERCISE CARE IN HANDLING, LOADING, UNLOADING, AND STORING TO AVOID DAMAGE.

2. TRENCH, PIPE BEDDING, AND BACKFILL:
   a. TRENCHES SHALL BE PROPERLY BACKFILLED AND COMPACTED AS SHOWN ON THE APPROVED PLAN.
   b. PIPE BEDDING SHALL BE CLASS B "" AGGREGATE BASE COURSE PLACED WITHIN TRENCH NOT LESS THAN 6 INCHES BUT NOT MORE THAN 8 INCHES IN COMPACTED THICKNESS, SHOULD PROVIDE UNIFORM AND ADEQUATE LONGITUDINAL SUPPORT UNDER THE PIPE, AND SHALL BE COMPACTED TO 95 PERCENT MAXIMUM DRY DENSITY UNLESS OTHERWISE NOTED ON PLANS.
   c. PIPE CUSHION SHALL BE CLASS B "" AGGREGATE BASE COURSE PROPERLY PLACED A MINIMUM OF 12' COMPACTED THICKNESS OVER THE TOP OF THE PIPE TO PROVIDE ADEQUATE SIDE SUPPORT WHILE AVOIDING VERTICAL AND LATERAL DISPLACEMENT.
   d. CONTROLLED LOW-STRENGTH MATERIAL (CLSM) SHALL BE USED AS THE FINAL TRENCH BACKFILL UNLESS OTHERWISE NOTED ON THE PLAN OR APPROVED BY THE WWD ENGINEER.
   e. COMPACTION TESTING FOR BASE COURSE MATERIAL SHALL BE PERFORMED BY AN INDEPENDENT TESTING AND QUALITY CONTROL LABORATORY. COMPACTION TESTING SHALL BE A MINIMUM OF ONE (1) TEST PER 150 LINEAL FEET OR A FRACTION THEREOF. THE ENGINEER RESERVES THE RIGHT TO INCREASE THE FREQUENCY OF COMPACTION TO MATCH FIELD CONDITIONS. TEST RESULTS SHALL BE SUBMITTED TO THE WWD ENGINEER FOR AS PART OF THE FINAL ACCEPTANCE.

3. SEWER LATERAL PIPE AND FITTINGS:
   a. NEW SEWER LATERALS AND CLEANOUT SHALL BE 6" DIAMETER, PVC SDR26 PIPE AND FITTINGS.
   b. SEWER CLEANOUTS SHALL BE LOCATED IN THE *COUNTY RIGHT-OF-WAY* WITHIN ONE FOOT OF THE PROPERTY LINE. THE CLEANOUT SHALL BE EASILY ACCESSIBLE (I.E. NOT BE BURIED OR LOCATED UNDER OR CLOSE TO ROCK WALLS, FENCES OR OTHER OBSTRUCTIONS,
   c. THE CLEANOUT SHALL BE PROVIDED A BRASS COUNTERSUNK CAP AND AN 18"X18"X18" CLASS B CONCRETE COLLAR REINFORCED WITH 1#3 REINFORCEMENT STEEL LOOP. REFER WWD STANDARD DETAIL WW-2. IN THE EVENT THAT THE CLEANOUT IS INSTALLED WITHIN A SIDEWALK OR SIMILAR AREA HAVING CONCRETE SURFACES, THE CONCRETE COLLAR IS NOT REQUIRED.
   d. IF A CLEANOUT IS SUBJECT TO VEHICULAR OR ABNORMAL LOADING IT SHALL BE PROVIDED A TRAFFIC RATED FRAME/COVER (MODEL SBF 1246W, MANUFACTURED BY SOUTH BAY FOUNDRY OR APPROVED EQUAL) AND SHALL BE INSTALLED AS PER MANUFACTURER'S RECOMMENDATIONS. REFER WWD STANDARD DETAIL WW-4.
   e. SEWER LATERAL CONNECTIONS TO AN EXISTING SEWER MAIN MAY BE MADE WITH A WYE CONFIGURED FLEXIBLE SADDLE ROTATED 45 DEGREES ABOVE THE SEWER SPRING LINE. SEWER LATERAL SADDLE CONNECTIONS AND CORED SEWER MAIN ENTRY SHALL PROVIDE A SMOOTH AND UNOBSTRUCTED FLOW AREA. THE SEWER SADDLE SHALL COMPLETELY OVERLAY THE CORE ENTRY AREA ON THE MAIN SEWER PIPE. THE SADDLE SHALL BE SECURED TO THE MAIN SEWER PIPE WITH STAINLESS STEEL STRAPS AND JACKETED WITH CLASS 8 REINFORCED CONCRETE. THE REINFORCED JACKET SHALL COMPLETELY ENCASE THE EXISTING MAIN SEWER PIPE, BE A MINIMUM OF 6" THICK, AND EXTEND A MINIMUM OF 6" BEYOND THE SEWER SADDLE.

4. SEWER LINE ACCEPTANCE TEST:
   a. ALL NEWLY INSTALLED SEWER MAINS AND LATERALS ARE SUBJECT TO LEAKAGE AND CCTV INSPECTION PRIOR TO FINAL ACCEPTANCE AS DIRECTED BY THE WWD.
   b. LEAKAGE TESTING SHALL BE ACCOMPLISHED WITH SECTION 21.3 D OF THE STANDARD SPECIFICATIONS FOR PUBLIC WORKS CONSTRUCTION, SEPTEMBER 1986. ALL COSTS FOR TESTING SHALL BE BORNE BY THE CONTRACTOR.
   c. AN INITIAL CCTV INSPECTION WILL BE PERFORMED BY THE COUNTY AT NO COST TO THE CONTRACTOR SUBJECT TO THE CONDITIONS BELOW.
      i. THE CONTRACTOR SHALL BE RESPONSIBLE TO OBTAIN, FROM THE WWD, A COPY OF THE SEWER LINE ACCEPTANCE TEST CRITERIA PRIOR TO REQUESTING OR SCHEDULING A CCTV INSPECTION.
      ii. THE CONTRACTOR SHALL ASSIST THE COUNTY IN THE PERFORMANCE OF THE CCTV INSPECTION, SHALL BE RESPONSIBLE FOR ALL TRAFFIC CONTROL REQUIREMENTS, AND SHALL BE RESPONSIBLE FOR CLEANING OF THE LINES TO REMOVE ALL DEBRIS PRIOR TO CCTV INSPECTION. IN THE EVENT THAT PIPES ARE FOUND TO HAVE BEEN INADEQUATELY CLEANED, THE COUNTY WILL TERMINATE THE INSPECTION AND ANY SUBSEQUENT INSPECTIONS WILL BE SUBJECT TO CHARGES TO THE CONTRACTOR.
      iii. THE CONTRACTOR SHALL HAVE A SUPERVISORY REPRESENTATIVE PRESENT DURING PERFORMANCE OF THE CCTV INSPECTION.
      iv. IF THE CCTV INSPECTION REVEALS CONDITIONS SUCH AS SAGS, DENTS, OUT-OF-ROUND, ETC. THEN, MANDREL TESTING IN ACCORDANCE WITH SECTION 21.3 E OF THE STANDARD SPECIFICATIONS FOR PUBLIC WORKS CONSTRUCTION, SEPTEMBER 1986 WILL BE REQUIRED AT WHICH THE COST WILL BE BORNE BY THE CONTRACTOR.
      v. CCTV INSPECTIONS WILL BE RECORDED IN VHS OR CDROM FORMAT. IN THE EVENT THAT THE CONTRACTOR REQUESTS A COPY OF THE CCTV INSPECTION, THE CONTRACTOR WILL BE CHARGED FOR THE COPY AT A RATE OF $25.00.

5. FINAL PROJECT SUBMITTALS:
   a. UPON FINAL PROJECT ACCEPTANCE SUBMIT TO WWD ONE (1) SET OF "AS-BUILT" PLANS ON VELLUM AND TWO (2) COPIED SETS AND ONE (1) SET OF ELECTRONIC DRAWINGS IN AUTOCAD 2009 VERSION AND (1) SET OF ELECTRONIC DRAWINGS IN ADOBE PDF FORMAT.
   b. IT IS MANDATORY THAT THE "AS-BUILT" PLANS SHOW CORRECTLY IDENTIFIED PROPERTY TMK NUMBERS, LOCATION OF SEWER MANHOLES, LATERALS, CLEANOUTS AND ALL OTHER MAJOR COMPONENTS OF THE WASTEWATER COLLECTION SYSTEM INCLUDING INVERT ELEVATIONS AT ALT SEWER MANHOLES, LATERAL CONNECTIONS AT THE MAIN, LATERAL ELEVATIONS AT THE CLEANOUT. SUBMITTED DOCUMENTATION SHALL BE CERTIFIED BY A LICENSED PROFESSIONAL LAND SURVEYOR ATTESTING TO THE LOCATION AND ELEVATIONS OF ALL MAJOR COMPONENTS OF THE WASTEWATER COLLECTION SYSTEM AS SHOWN ON THE AS-BUILT PLANS.

DIVISION CHIEF, WASTEWATER DIVISION
DEPARTMENT OF ENVIRONMENTAL MANAGEMENT
COUNTY OF HAWAII

DATE

No.	DATE	DWG.	CHK.	REVISIONS
1				
2				
3				

PRINTS TO

DATE

This work was prepared by me or under my supervision and construction of this project will be under my observation.
Exp. 04-30-16

Wesley R. Segawa & Associates, Inc.

DENNIS K.W. LEE * LICENSED PROFESSIONAL ENGINEER * No. 4004-C * USA * HAWAII

Wesley R. Segawa and Associates, Inc.
Committed to Quality Performance & Value
Civil & Structural Engineers
101 Silva Street, Suite 201 Hilo, Hawaii 96720-4755
Telephone: (808) 935-4677 Fax: (808) 935-2070

Project Title: KEAUKAHA TRACT 1 IMPROVEMENTS
LOTS 131-A-1, 131-A-2 & 131-A-3

Sheet Title: W.W.C. SYSTEM NOTES

DESIGN BY:	DRB
DRAWN BY:	DRB
CHECKED BY:	DL
APPROVED BY:	DL
DATE:	2015
SCALE:	AS NOTED
FILE No.	W1302.43

DRAWING No. C-4

SHEET No. 5 OF 14 SHTS.

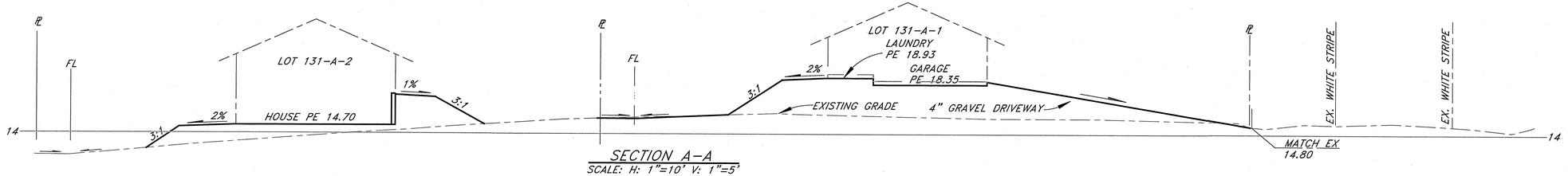

SECTION A–A
SCALE: H: 1"=10' V: 1"=5'

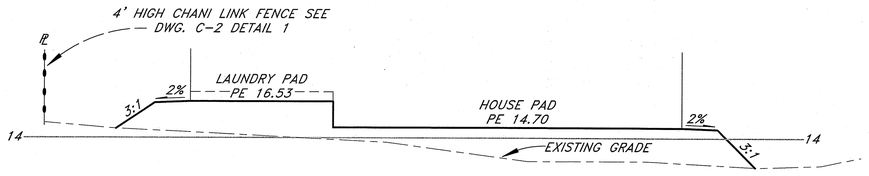

SECTION B–B
SCALE: H: 1"=10' V: 1"=5'

Curve Table					
Curve #	Length	Radius	Delta	Chord Direction	Chord Length
C1	7.85	5.00	90.00	S57° 00' 00"E	7.07
C2	18.52	10.00	106.10	S24° 57' 00"W	15.98
C3	7.02	25.00	16.10	S20° 03' 00"E	7.00
C4	18.17	10.00	104.13	S23° 57' 58"W	15.77
C5	7.85	5.00	90.00	S58° 58' 05"E	7.07
C6	6.17	25.00	14.13	S21° 02' 02"E	6.15

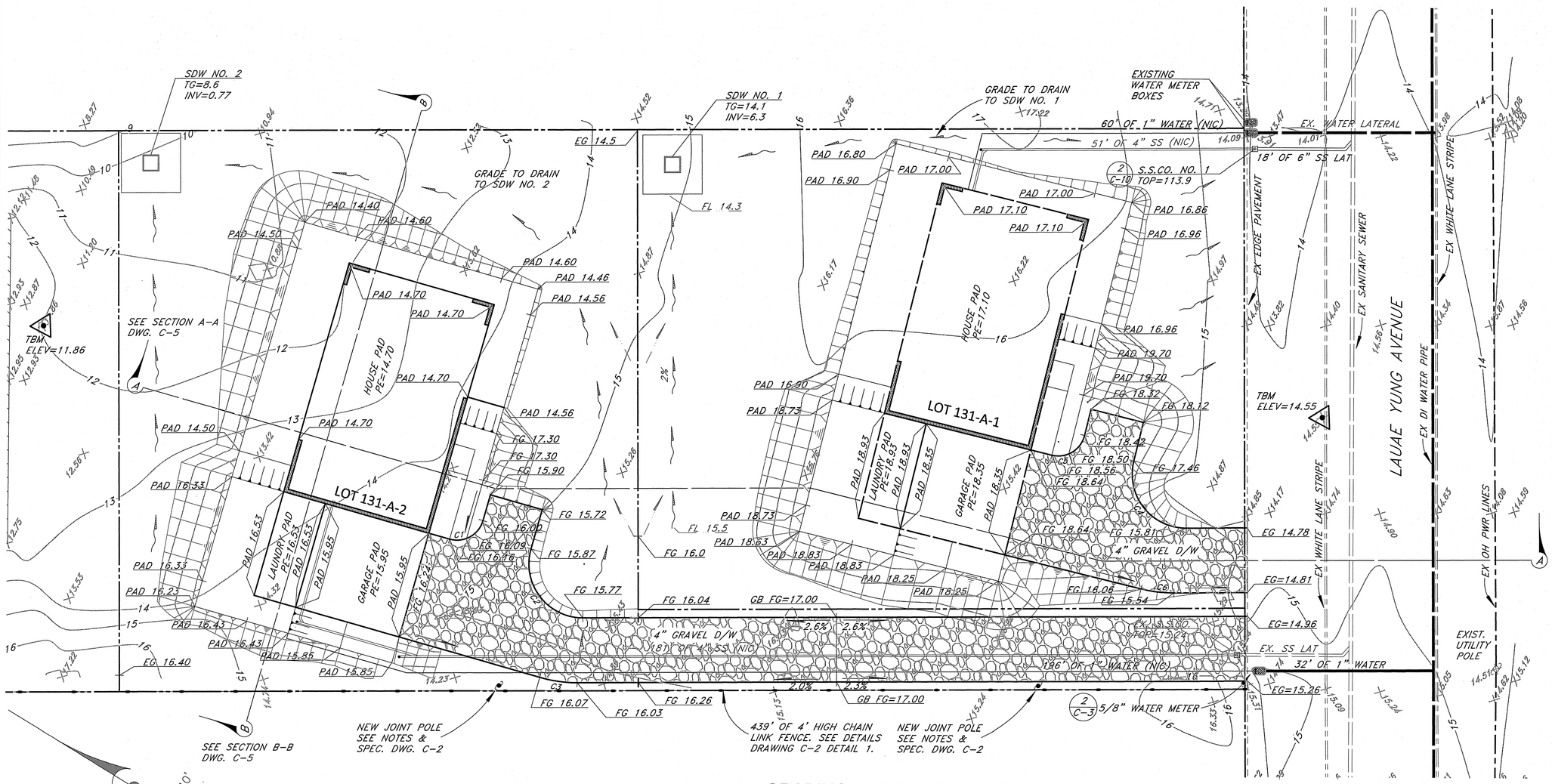

GRADING AND DRAINAGE PLAN
SCALE: 1"=10'

SCALE: 1"=10'

10' 0 10' 20'
GRAPHIC SCALE: 1"=10'

No.	DATE	DWG. CHK.	REVISIONS
1			
2			
3			

PRINTS TO
DATE

This work was prepared by me or under my supervision and construction of this project will be under my observation.
Exp. 04-30-16

K. W. LEE LICENSED PROFESSIONAL ENGINEER No. 4004-C HAWAII U.S.A.

Wesley R. Segawa & Associates, Inc.

Civil & Structural Engineers
Wesley R. Segawa and Associates, Inc.
Committed to Quality Performance & Value
101 Silva Street, Suite 201 Hilo, Hawaii 96720-4755
Telephone: (808) 935-4677 Fax: (808) 935-2070

Project Title: KEAUKAHA TRACT 1 IMPROVEMENTS
LOTS 131-A-1, 131-A-2 & 131-A-3

Sheet Title: GRADING PLAN - LOT 131-A-1 & 2

DESIGN BY:	DRB
DRAWN BY:	DRB
CHECKED BY:	DL
APPROVED BY:	DL
DATE:	2015
SCALE:	AS NOTED
FILE No.	W1302.43

DRAWING No.
C-5

SHEET No.
6
OF 14 SHTS.

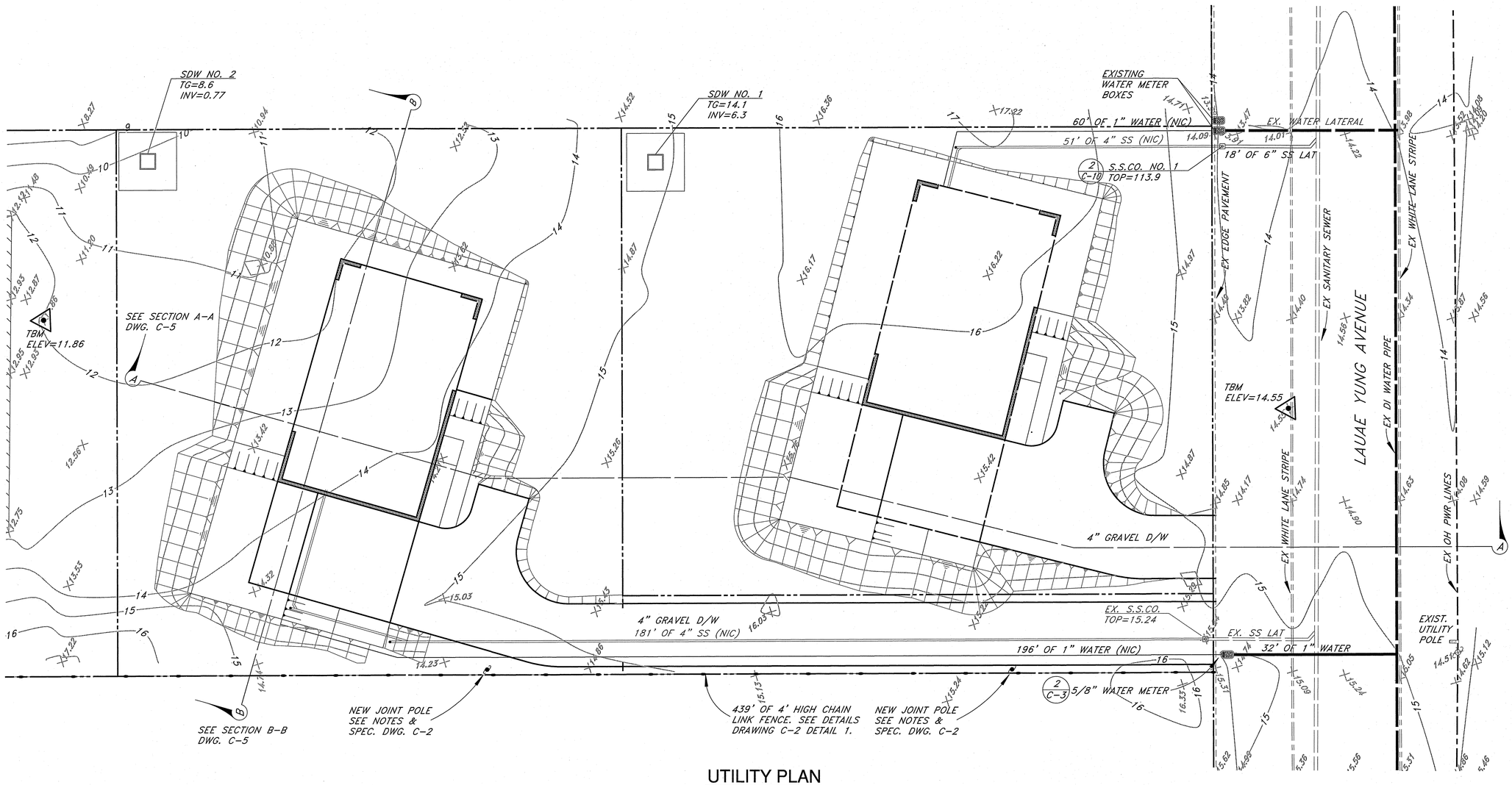

UTILITY PLAN

SCALE: 1"=10'

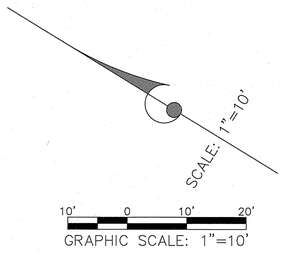

No.	DATE	DWG. CHK.	REVISIONS

PRINTS TO

DATE

This work was prepared by me or under my supervision and construction of this project will be under my observation.
Exp. 04-30-16

DENNIS K. W. LEE LICENSED PROFESSIONAL ENGINEER No. 4004-C HAWAII, USA

Wesley R. Segawa & Associates, Inc.

WRSA
Wesley R. Segawa and Associates, Inc.
Committed to Quality Performance & Value
Civil & Structural Engineers
101 Silva Street, Suite 201 Hilo, Hawaii 96720-4755
Telephone: (808) 935-4677 Fax: (808) 935-2070

Project Title: KEAUKAHA TRACT 1 IMPROVEMENTS
LOTS 131-A-1, 131-A-2 & 131-A-3

Sheet Title: UTILITY PLAN - LOT 131-A-1 & 2

DESIGN BY:	DRB
DRAWN BY:	DRB
CHECKED BY:	DL
APPROVED BY:	DL
DATE:	2015
SCALE:	AS NOTED
FILE No.	W1302.43

DRAWING No.
C-6

SHEET No.
7
OF 14 SHTS.

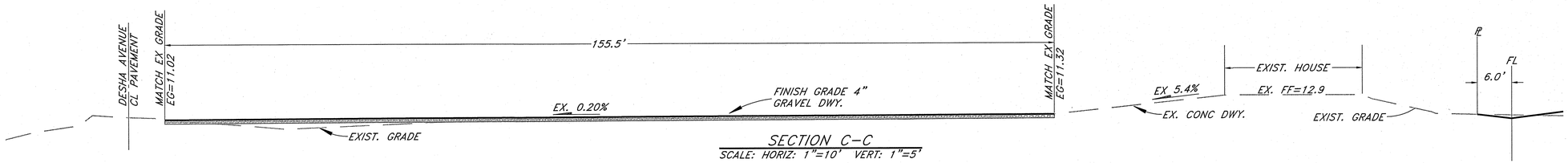

SECTION C-C
SCALE: HORIZ: 1"=10' VERT: 1"=5'

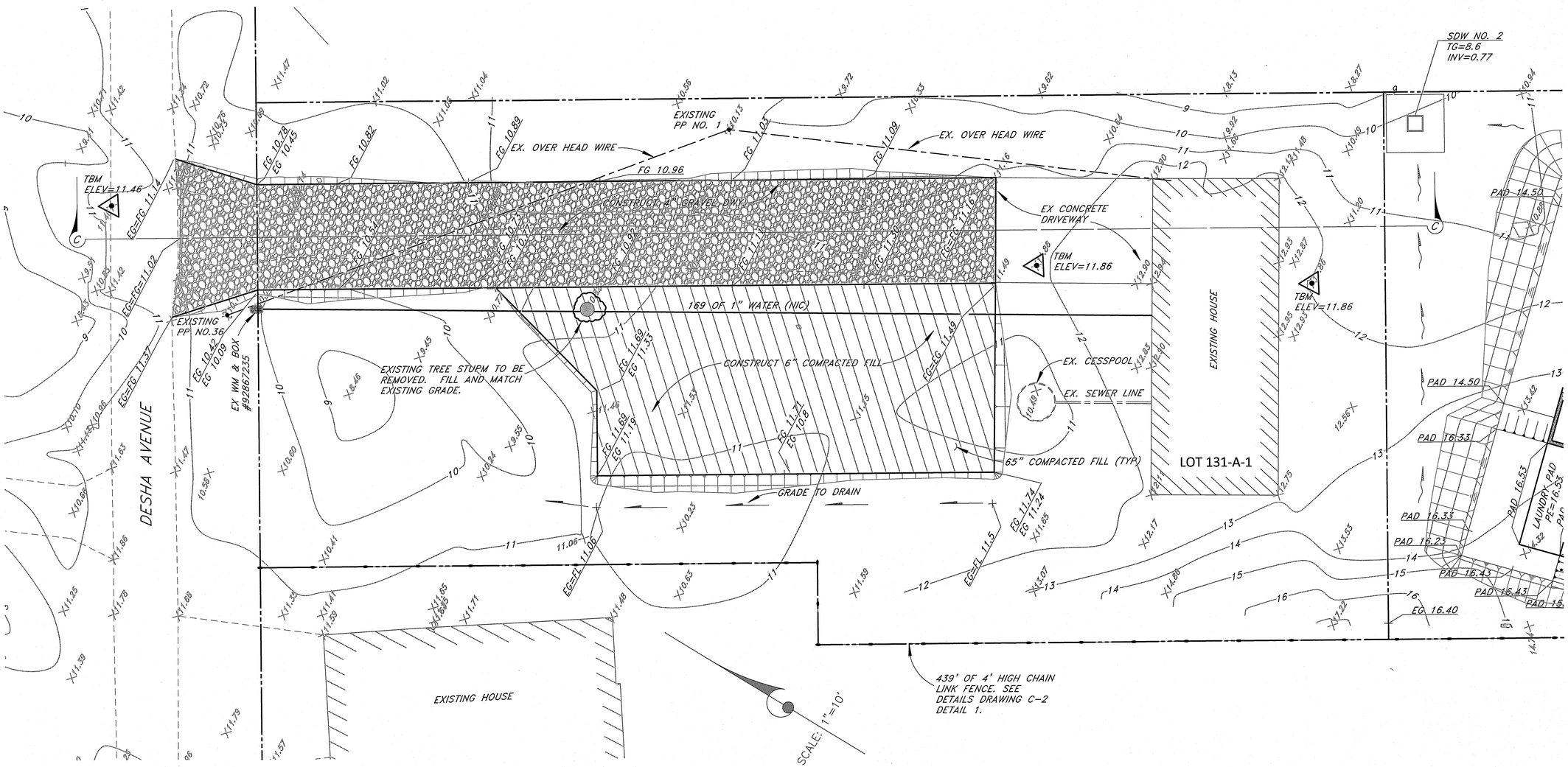

GRADING PLAN
SCALE: 1"=10'
10' 0 10' 20'
GRAPHIC SCALE: 1"=10'

No.	DATE	DWG. CHK.	REVISIONS

PRINTS TO

DATE

This work was prepared by me or under my supervision and construction of this project will be under my observation.
Exp. 04-30-16

Wesley R. Segawa & Associates, Inc.

DENNIS K.W. LEE
LICENSED PROFESSIONAL ENGINEER
No. 4004-C
HAWAII U.S.A.

WRSA
Wesley R. Segawa and Associates, Inc.
Committed to Quality Performance & Value
Civil & Structural Engineers
101 Silva Street, Suite 201 Hilo, Hawaii 96720-4755
Telephone: (808) 935-4677 Fax: (808) 935-2070

Project Title: KEAUKAHA TRACT 1 IMPROVEMENTS
LOTS 131-A-1, 131-A-2 & 131-A-3

Sheet Title: GRADING PLAN - LOT 131-A-3

DESIGN BY:	DRB
DRAWN BY:	DRB
CHECKED BY:	DL
APPROVED BY:	DL
DATE:	2015
SCALE:	AS NOTED
FILE No.	W1302.43

DRAWING No.
C-7

SHEET No.
8
OF 14 SHTS.

UTILITY PLAN

SCALE: 1"=10'

No.	DATE	DWG. CHK.	REVISIONS

PRINTS TO

DATE

This work was prepared by me or under my supervision and to the best of my knowledge this project will be under my observation.
Exp. 04-30-16

Wesley R. Segawa & Associates, Inc.

K. W. LEE LICENSED PROFESSIONAL ENGINEER No. 4004-C DENNIS U.S.A. HAWAII

Wesley R. Segawa and Associates, Inc.
Civil & Structural Engineers
101 Silva Street, Suite 201 Hilo, Hawaii 96720-4755
Telephone: (808) 935-4677 Fax: (808) 935-2070

Project Title: KEAUKAHA TRACT 1 IMPROVEMENTS
LOTS 131-A-1, 131-A-2 & 131-A-3

Sheet Title: UTILITY PLAN - LOT 131-A-3

DESIGN BY:	DRB
DRAWN BY:	DRB
CHECKED BY:	DL
APPROVED BY:	DL
DATE:	2015
SCALE:	AS NOTED
FILE No.	W1302.43

DRAWING No. C-8

SHEET No. 9 OF 14 SHTS.

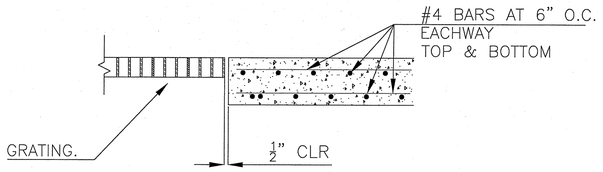

SECTION A–A
NOT TO SCALE

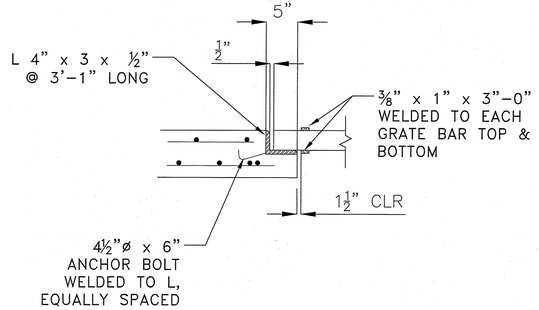

SECTION B–B
NOT TO SCALE

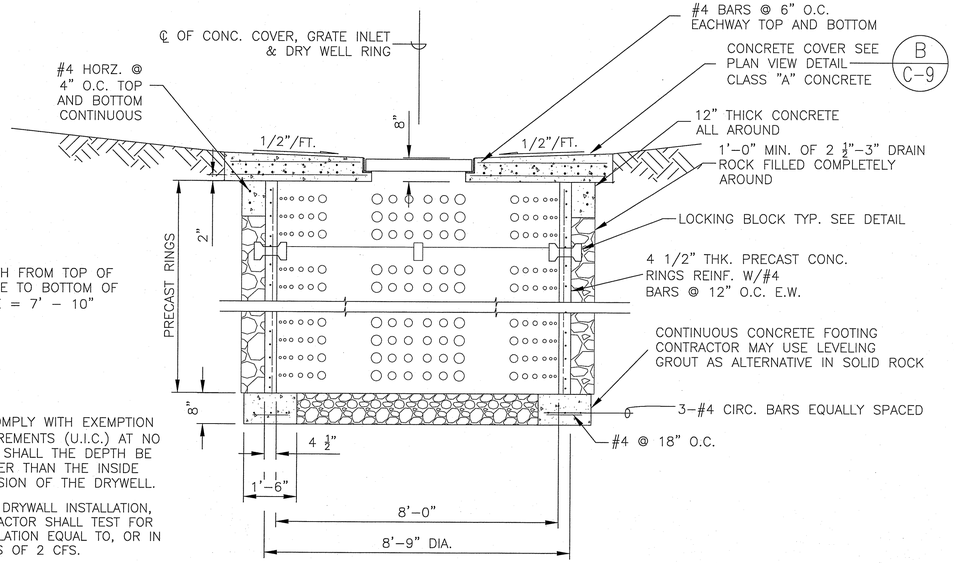

DEPTH FROM TOP OF
GRATE TO BOTTOM OF
HOLE = 7' – 10"

NOTES:

1. TO COMPLY WITH EXEMPTION REQUIREMENTS (U.I.C.) AT NO POINT SHALL THE DEPTH BE GREATER THAN THE INSIDE DIMENSION OF THE DRYWELL.
2. AFTER DRYWALL INSTALLATION, CONTRACTOR SHALL TEST FOR PERCOLATION EQUAL TO, OR IN EXCESS OF 2 CFS.

CONCRETE RING DRYWELL
NOT TO SCALE

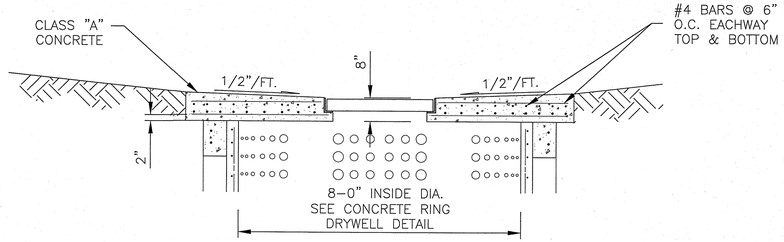

SECTION A–A
NOT TO SCALE



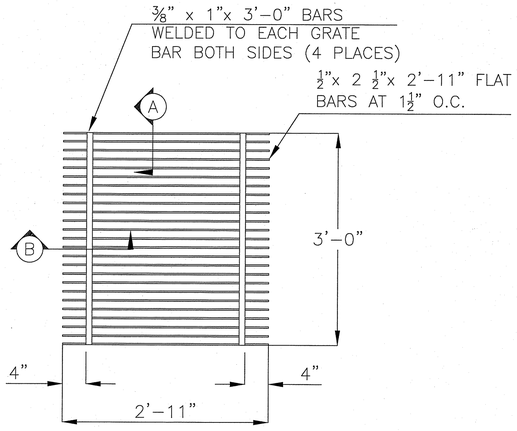

GRATING
NOT TO SCALE

Ⓐ C-9 DRYWELL GRATE DETAIL
NOT TO SCALE

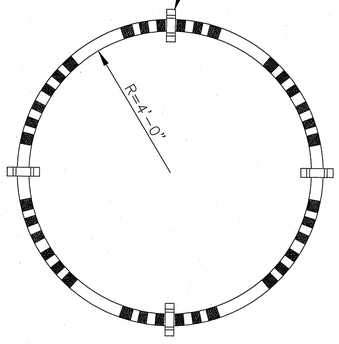

TYPICAL RING CROSS SECTION
NOT TO SCALE

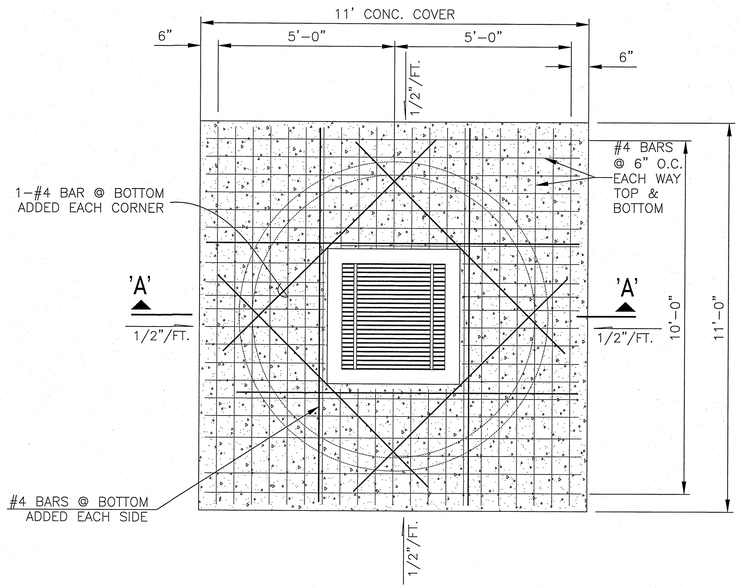

PLAN
NOT TO SCALE

Ⓑ C-9 CONCRETE DRYWELL DETAIL
NOT TO SCALE

No.	DATE	DWG. CHK.	REVISIONS	DATE
				PRINTS TO

This work was prepared by me or under my supervision and construction of this project will be under my observation. Exp. 04-30-16

Wesley R. Segawa & Associates, Inc.

DENNIS K. W. LEE LICENSED PROFESSIONAL ENGINEER No. 4004-C USA HAWAII

Wesley R. Segawa and Associates, Inc.
Committed to Quality Performance & Value
Civil & Structural Engineers
101 Silva Street, Suite 201 Hilo, Hawaii 96720-4755
Telephone: (808) 935-4677 Fax: (808) 935-2070

Project Title: KEAUKAHA TRACT 1 IMPROVEMENTS
LOTS 131-A-1, 131-A-2 & 131-A-3

Sheet Title: SHALLOW DRYWELL DETAILS

DESIGN BY:	DRB
DRAWN BY:	DRB
CHECKED BY:	DL
APPROVED BY:	DL
DATE:	2015
SCALE:	AS NOTED
FILE No.	W1302.43

DRAWING No. C-9

SHEET No. 10 OF 14 SHTS.

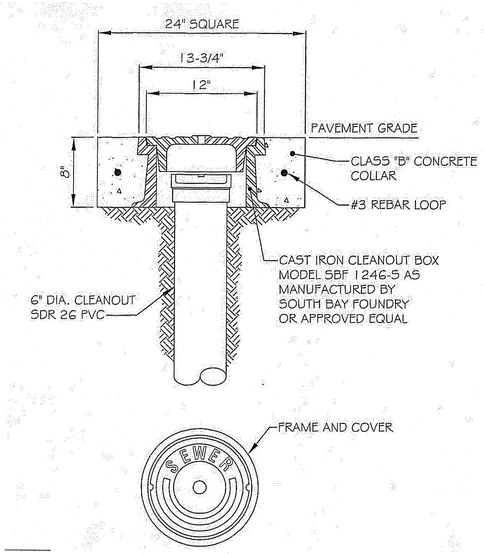

1 / C-10 TYPICAL TRAFFIC RATED FRAME & COVER
(COUNTY OF HAWAII, ENVIRONMENTAL MANAGEMENT, WASTEWATER DIVISION)
NOT TO SCALE

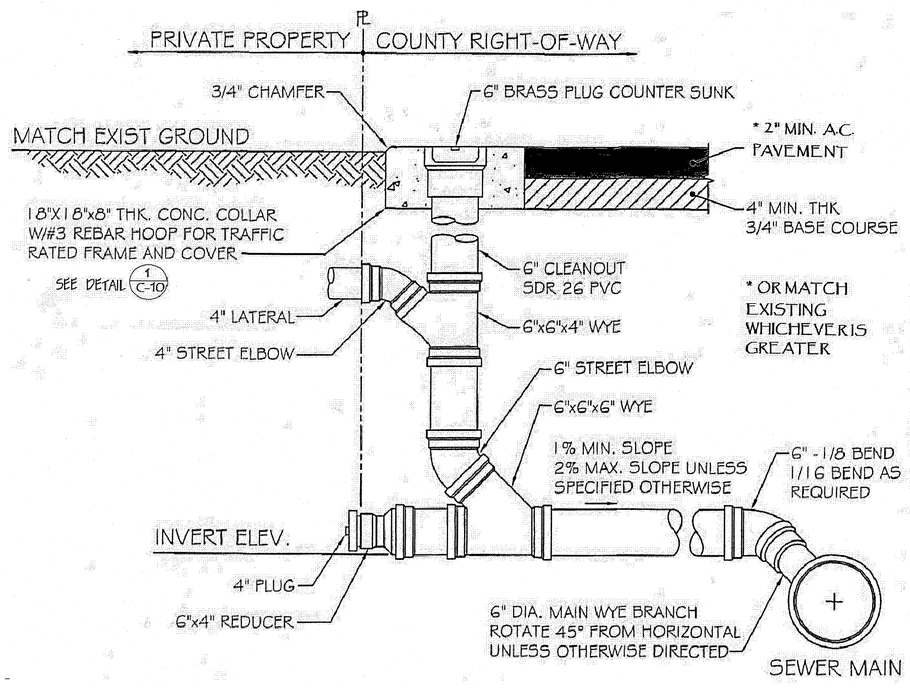

2 / C-10 TYPICAL LATERAL & CLEANOUT DETAIL
(COUNTY OF HAWAII, ENVIRONMENTAL MANAGEMENT, WASTEWATER DIVISION)
NOT TO SCALE

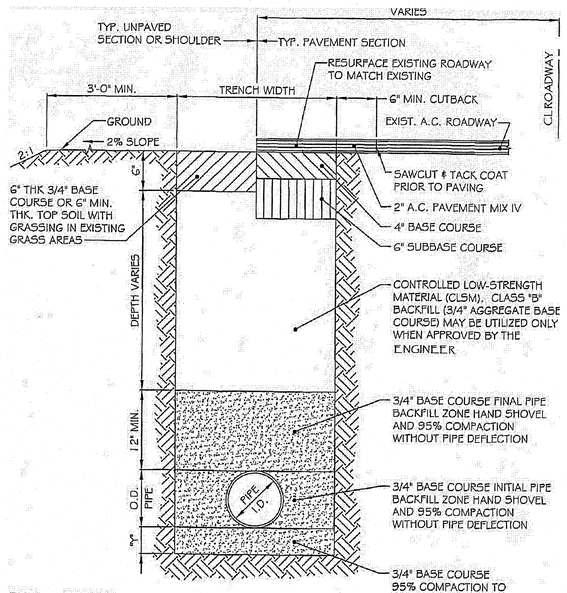

PIPE SIZE	TRENCH WIDTH	"Y"
6"	24"	4"
8"	24"	4"
10"	24"	4"
12"	30"	5"

NOTE: TRENCH RESTORATION WITHIN STATE RIGHT-OF-WAYS SHALL CONFORM TO THE REQUIREMENTS OF THE STATE OF HAWAII DEPARTMENT OF TRANSPORTATION HIGHWAYS DIVISION.

3 / C-10 TYPICAL TRENCH DETAIL
COUNTY ROADS
(COUNTY OF HAWAII, ENVIRONMENTAL MANAGEMENT, WASTEWATER DIVISION)
NOT TO SCALE

DIVISION CHIEF, WASTEWATER DIVISION
DEPARTMENT OF ENVIRONMENTAL MANAGEMENT
COUNTY OF HAWAII

DATE

No.	DATE	DWG.	CHK.	REVISIONS
1				
2				
3				

PRINTS TO

DATE

This work was prepared by me or under my supervision and construction of this project was under my observation.
Exp. 04-30-16

Wesley K. Segawa & Associates, Inc.

DENNIS K. W. LEE LICENSED PROFESSIONAL ENGINEER No. 4004-C HAWAII, U.S.A.

WRSA
Wesley R. Segawa and Associates, Inc.
Committed to Quality Performance & Value
Civil & Structural Engineers
101 Silva Street, Suite 201 Hilo, Hawaii 96720-4755
Telephone: (808) 935-4677 Fax: (808) 935-2070

Project Title: KEAUKAHA TRACT 1 IMPROVEMENTS
LOTS 131-A-1, 131-A-2 & 131-A-3

Sheet Title: SANITARY SEWER DETAILS

DESIGN BY:	DRB
DRAWN BY:	DRB
CHECKED BY:	DL
APPROVED BY:	DL
DATE:	2015
SCALE:	AS NOTED
FILE No.	W1302.43

DRAWING No. C-10

SHEET No. 11 OF 14 SHTS.

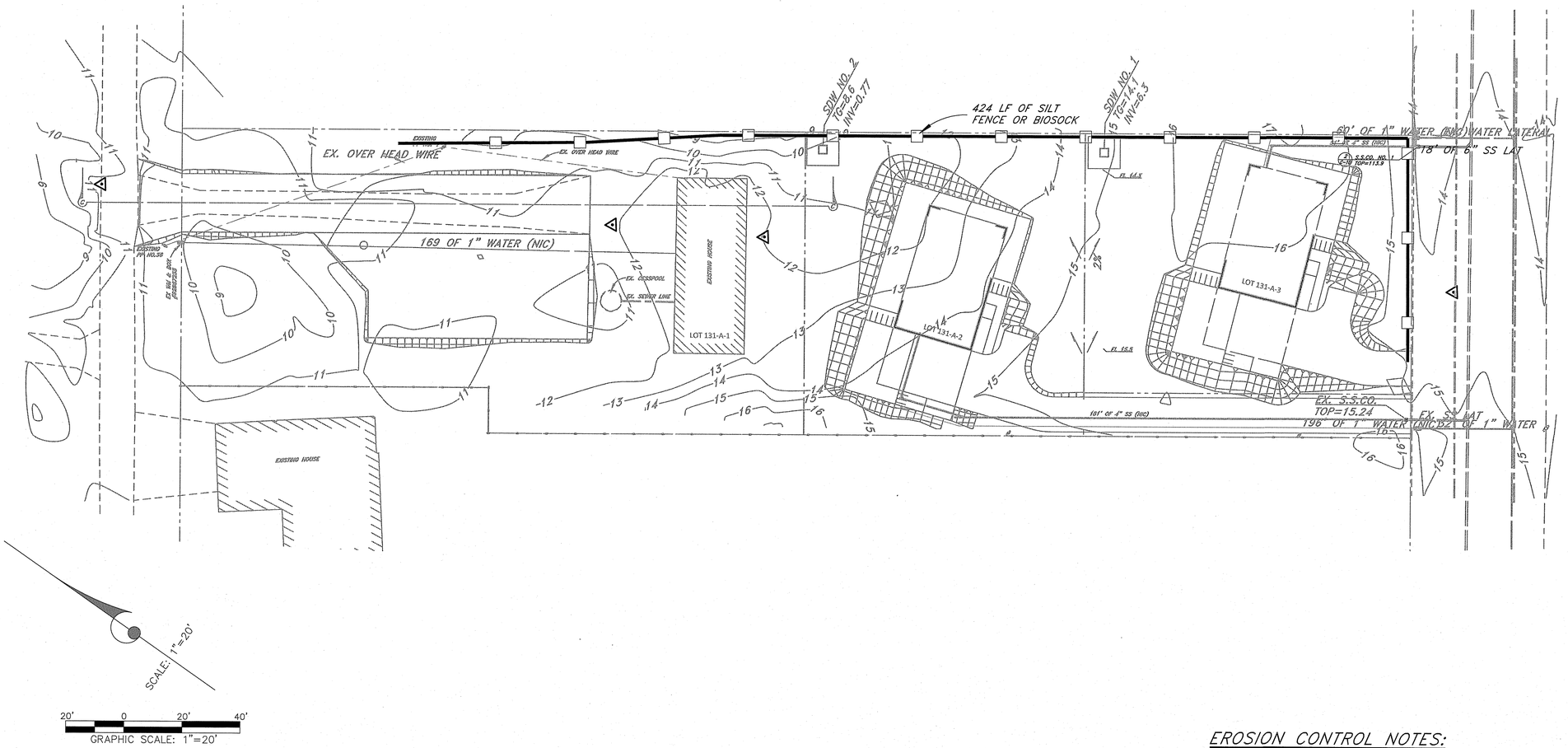

LEGEND:

SILT FENCE/BIOSOCK

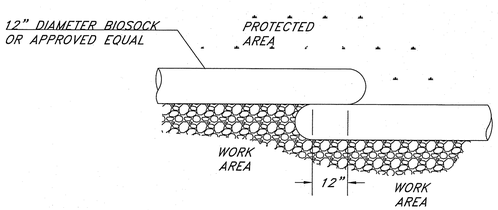

PLAN VIEW

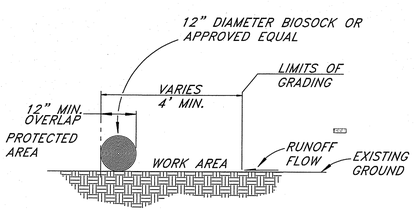

ELEVATION VIEW

BIOSOCK DETAIL (12" DIA)

NOT TO SCALE

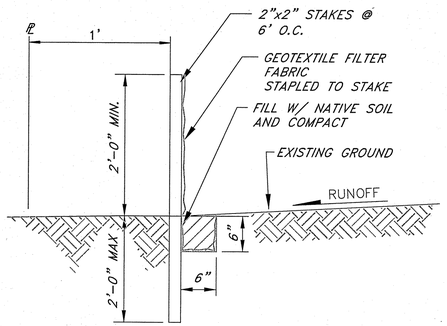

SILT FENCE NOTES:

BIOSOCK MAYBE USED IN LIEU OF SILT FENCE.

THE CONTRACTOR SHALL INSTALL SILT FENCES OR BIO-SOCK PRIOR TO CONSTRUCTION.

ALL BEST MANAGEMENT PRACTICES (BMP'S) SHALL NOT BE REMOVED UNTIL ALL PERMANENT EROSION CONTROL MEASURES ARE IN PLACE AND ESTABLISHED.

AT THE END OF GRADING OPERATIONS, EXISTING CB'S AND DMH'S SURROUNDING THE PROJECT SITE SHALL BE INSPECTED AND ANY ACCUMULATED SEDIMENT AND DEBRIS FOUND IN THE DRAIN STRUCTURES SHALL BE REMOVED. FLUSHING INTO THE CB'S AND DMH'S ARE PROHIBITED.

SILT FENCE DETAIL

NO SCALE

EROSION CONTROL NOTES:

1. THE CONTRACTOR SHALL REFER TO THE RULES RELATING TO SOILS EROSION STANDARDS AND GUIDELINES, APRIL 1999, BY THE CITY AND COUNTY OF HONOLULU DEPARTMENT OF PLANNING AND PERMITTING FOR BEST MANAGEMENT PRACTICES.
2. THE CONTRACTOR SHALL STABILIZE THE CONSTRUCTION SITE AT ALL POINTS OF EGRESS AND INGRESS WITH A 12' WIDE X 20' LONG X 8" DEEP SECTION OF NO. 2 CRUSHED ROCK.
3. STOCKPILES SHALL NOT BE LOCATED IN DRAINAGE WAYS OR OTHER AREAS OF CONCENTRATED FLOWS. SEDIMENT TRAPPING DEVICES SUCH AS SILT FENCE OR BIOSOCKS SHALL BE USED AROUND THE BASE OF ALL STOCKPILES.
4. DUST CONTROL SHOULD BE APPLIED TO REDUCE DUST EMISSIONS. THE CONTRACTOR, AT THEIR OWN EXPENSE, SHALL KEEP THE PROJECT AREA AND SURROUNDING AREA FREE FROM DUST NUISANCE. THE WORK SHALL BE IN CONFORMANCE WITH THE AIR POLLUTION CONTROL STANDARDS CONTAINED IN HAWAII ADMINISTRATIVE RULES: CHAPTER 11-60, "AIR POLLUTION CONTROL".
5. SURFACE FLOW FROM ABOVE AN EXPOSED SLOPE SHALL NOT BE ALLOWED TO FLOW OVER THE SLOPE WITHOUT PROTECTION. SLOPE PROTECTION SHALL BE USED ON AREAS WITH SLOPES GREATER THAN 50% AND ON AREAS OF MODERATE SLOPES THAT ARE PRIME TO EROSION.
6. ALL STORM DRAIN INLETS ON SITE, AND THOSE OFFSITE WHICH MAY RECEIVE RUNOFF FROM THE SITE SHALL USE AN INLET PROTECTION DEVICE.
7. TEMPORARY STABILIZATION IS NOT REQUIRED WHEN THE DISTURBED AREA WILL BE WORKED WITHIN A 14 DAY PERIOD. STABILIZATION IS REQUIRED FOR DISTURBED AREAS AT FINAL GRADE AND FOR THOSE AREAS THAT WILL NOT BE WORKED WITHIN A 14 DAY PERIOD.
8. ALL DISTURBED AREAS SHALL BE PERMANENTLY STABILIZED PRIOR TO REMOVING EROSION AND SEDIMENT MEASURES. ALL TEMPORARY EROSION AND SEDIMENT CONTROL MEASURES SHALL BE REMOVED WITHIN 30 DAYS AFTER FINAL SITE STABILIZATION OR AFTER THE TEMPORARY MEASURES ARE NO LONGER NEEDED. TRAPPED SEDIMENT AND AREAS OF DISTURBED SOIL WHICH RESULT FROM THE REMOVAL OF THE TEMPORARY MEASURES SHALL BE IMMEDIATELY PERMANENTLY STABILIZED.

No.	DATE	DWG.	CHK.	REVISIONS
△				
△				
△				

DATE

PRINTS TO

This work was prepared by me or under my supervision and construction of this project was under my observation.
Exp. 04-30-16

Wesley R. Segawa & Associates, Inc.

K. W. LEE DENNIS LICENSED PROFESSIONAL ENGINEER No. 4004-C HAWAII, U.S.A.

Civil & Structural Engineers
Wesley R. Segawa and Associates, Inc.
Committed to Quality Performance & Value
101 Silva Street, Suite 201 Hilo, Hawaii 96720-4755
Telephone: (808) 935-4677 Fax: (808) 935-2070

Project Title: KEAUKAHA TRACT 1 IMPROVEMENTS
LOTS 131-A-1, 131-A-2 & 131-A-3

Sheet Title: EROSION CONTROL (BMP) PLAN

DESIGN BY:	DRB
DRAWN BY:	DRB
CHECKED BY:	DL
APPROVED BY:	DL
DATE:	2015
SCALE:	AS NOTED
FILE No.	W1302.43

DRAWING No.
C-11

SHEET No.
12
OF 14 SHTS.

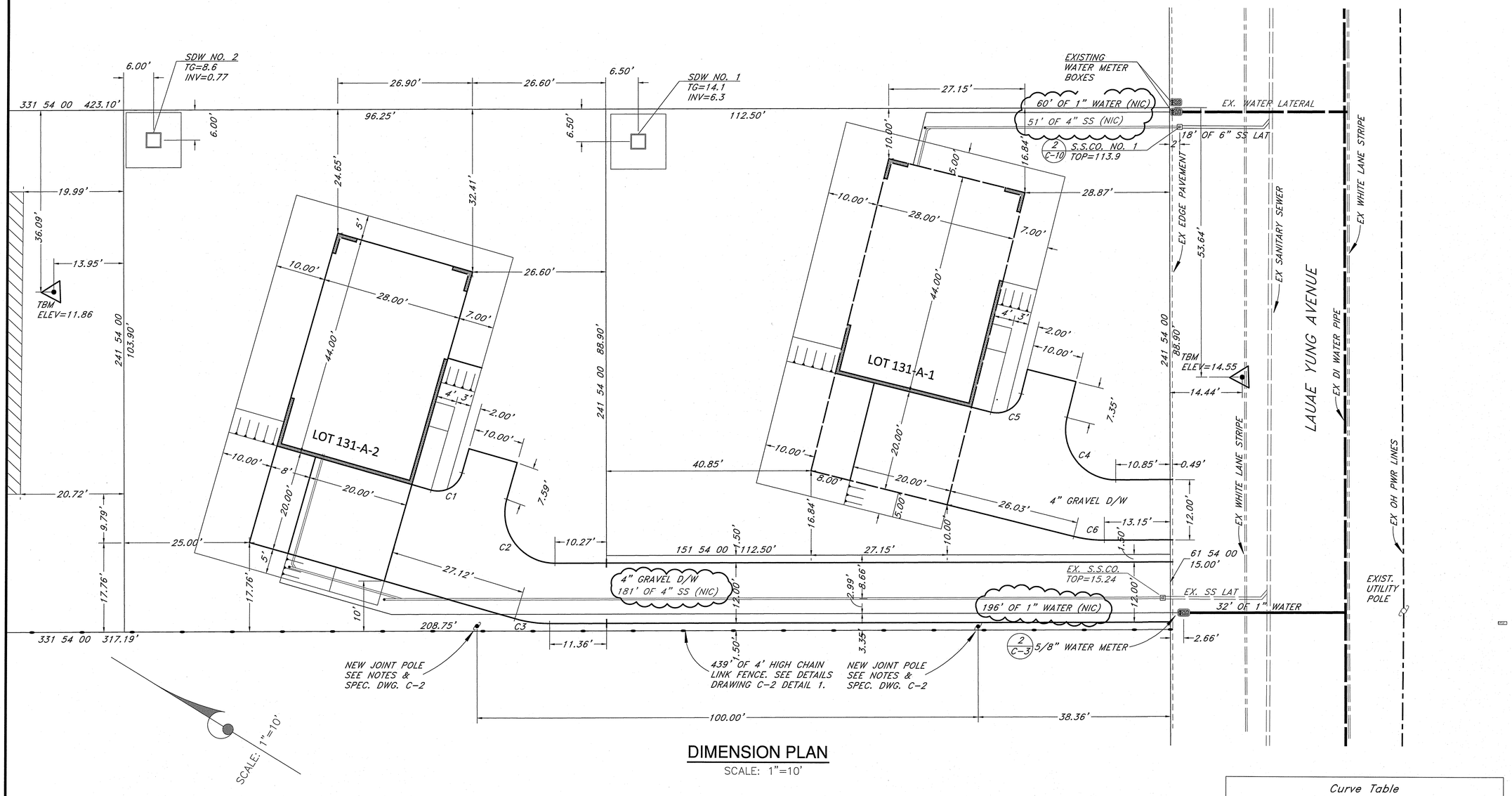

DIMENSION PLAN

SCALE: 1"=10'

Curve Table					
Curve #	Length	Radius	Delta	Chord Direction	Chord Length
C1	7.85	5.00	90.00	S57° 00' 00"E	7.07
C2	18.52	10.00	106.10	S24° 57' 00"W	15.98
C3	7.02	25.00	16.10	S20° 03' 00"E	7.00
C4	18.17	10.00	104.13	S23° 57' 58"W	15.77
C5	7.85	5.00	90.00	S58° 58' 05"E	7.07
C6	6.17	25.00	14.13	S21° 02' 02"E	6.15

No.	DATE	DWG.	CHK.	REVISIONS

PRINTS TO DATE

This work was prepared by me or under my supervision and construction of this project will be under my observation. Exp. date: 4/30/16

DENNIS K. W. LEE LICENSED PROFESSIONAL ENGINEER No. 4004-C USA HAWAII

Wesley R. Segawa & Associates, Inc.

Civil & Structural Engineers
Wesley R. Segawa and Associates, Inc.
Committed to Quality Performance & Value
101 Silva Street, Suite 201 Hilo, Hawaii 96720-4755
Telephone: (808) 935-4677 Fax: (808) 935-2070

Project Title: KEAUKAHA TRACT 1 IMPROVEMENTS
LOTS 131-A-1, 131-A-2 & 131-A-3

Sheet Title: DIMENSION PLAN - LOT 131-A-1 & 2

DESIGN BY:	DRB
DRAWN BY:	DRB
CHECKED BY:	DL
APPROVED BY:	DL
DATE:	2015
SCALE:	AS NOTED
FILE No.	W1302.43

DRAWING No. C-12

SHEET No. 13 OF 14 SHTS.

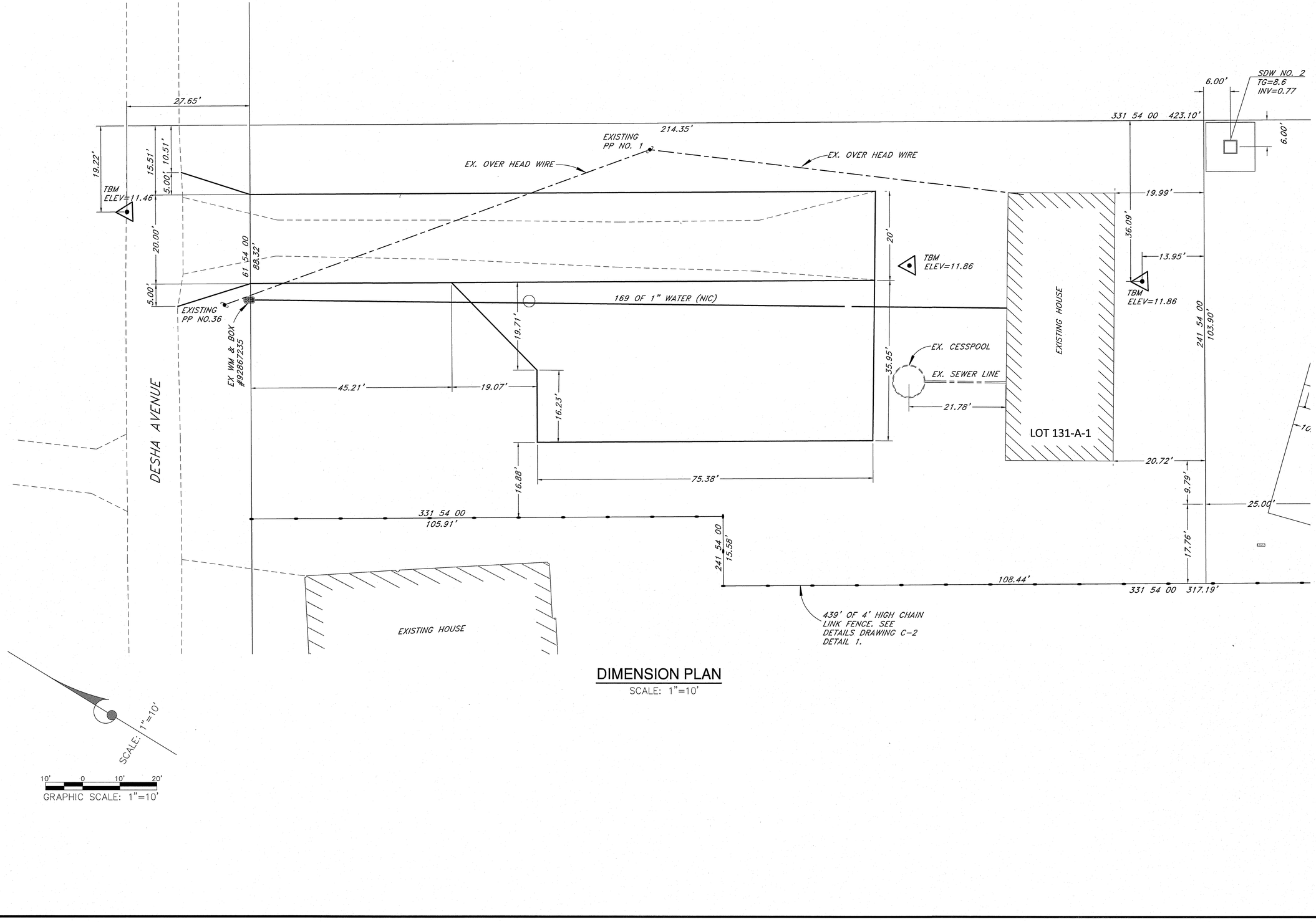

DIMENSION PLAN

SCALE: 1"=10'

SCALE: 1"=10'

10' 0 10' 20'

GRAPHIC SCALE: 1"=10'

No.	DATE	DWG. CHK.	REVISIONS	PRINTS TO	DATE
1					
2					
3					

This work was prepared by me or under my supervision and construction of this project will be under my observation.
Exp. 04-30-16

Wesley R. Segawa & Associates, Inc.

DENNIS K.W. LEE * LICENSED PROFESSIONAL ENGINEER * No. 4004-C * U.S.A. HAWAII

WRSA
Wesley R. Segawa and Associates, Inc.
Committed to Quality Performance & Value
Civil & Structural Engineers
101 Silva Street, Suite 201 Hilo, Hawaii 96720-4755
Telephone: (808) 935-4677 Fax: (808) 935-2070

Project Title: KEAUKAHA TRACT 1 IMPROVEMENTS
LOTS 131-A-1, 131-A-2 & 131-A-3

Sheet Title: DIMENSION PLAN LOT 131-A-3

DESIGN BY:	DRB
DRAWN BY:	DRB
CHECKED BY:	DL
APPROVED BY:	DL
DATE:	2015
SCALE:	AS NOTED
FILE No.	W1302.43

DRAWING No.
C-13

SHEET No.
14
OF 14 SHTS.

STATE OF HAWAII
DEPARTMENT OF HAWAIIAN HOME LANDS

KEAUKAHA TRACT 1 IMPROVEMENTS

LOT 279-A & 279-B

WAIAKEA, SOUTH HILO, HAWAII
TAX MAP KEY: (3) 2 - 1 - 023: 071
IFB-16-HHL-014
SUBDIVISION APPLICATION NO: SUB-15-001467

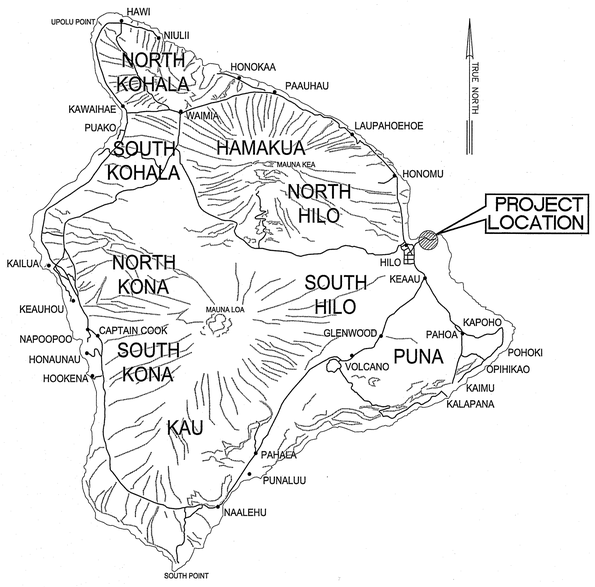

ISLAND OF HAWAII
NOT TO SCALE

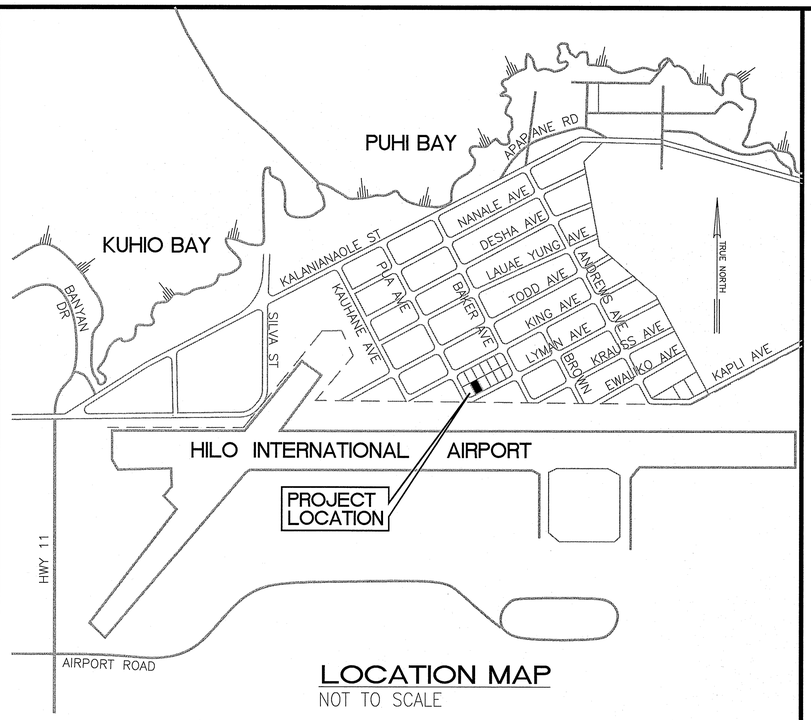

LOCATION MAP
NOT TO SCALE

I N D E X

SHEET NO.	DESCRIPTION	DRAWING NO.
1	TITLE SHEET	T-1
2	MISCELLANEOPUS NOTES	C-1
3	UTILITY POLE NOTES AND SPECIFICATIONS	C-2
4	WATER NOTES & DETAILS	C-3
5	GRADING AND DRAINAGE PLAN	C-4
6	UTILITY PLAN	C-5
7	SHALLOW DRYWELL DETAILS	C-6
8	EROSION CONTROL (BMP) PLAN	C-7
9	DIMENSION PLAN	C-8

APPROVED BY:

CHAIRMAN, HAWAIIAN HOMES COMMISSION
STATE OF HAWAII — DATE: 1/26/16

MANAGER, CHIEF-ENGINEER, DEPARTMENT OF WATER SUPPLY
COUNTY OF HAWAII — DATE:

DIRECTOR, PLANNING DEPARTMENT
COUNTY OF HAWAII — DATE:

FOR GRADING PURPOSES ONLY;

DIRECTOR, DEPARTMENT OF PUBLIC WORKS
COUNTY OF HAWAII — DATE:

No.	DATE	DWG.	CHK.	REVISIONS
△				
△				
△				

PRINTS TO
DATE

This work was prepared by me or under my supervision and provides for this project will be under my observation.
Exp. 04-30-16
Wesley R. Segawa & Associates, Inc.

LICENSED PROFESSIONAL ENGINEER — DENNIS K.W. LEE — No. 4004-C — HAWAII, U.S.A.

Wesley R. Segawa and Associates, Inc.
Committed to Quality Performance & Value
Civil & Structural Engineers
Hilo, Hawaii 96720-4755
Fax: (808) 935-2070

Project Title: KEAUKAHA TRACT 1 IMPROVEMENTS
LOTS 279-A & 279-B
Sheet Title: TITLE SHEET

DESIGN BY:	DRB
DRAWN BY:	DRB
CHECKED BY:	DL
APPROVED BY:	DL
DATE:	SEPT. 2015
SCALE:	AS NOTED
FILE No.	W1302.47

DRAWING No. T-1

SHEET No. 1 OF 9 SHTS.

GRADING NOTES:

1. ALL GRADING WORK SHALL CONFORM TO CHAPTER 10 OF THE HAWAII COUNTY CODE. SHOULD A GRADING PERMIT BE REQUIRED, NO WORK SHALL COMMENCE UNTIL THE DEPARTMENT OF PUBLIC WORKS (DPW) APPROVES A GRADING PERMIT.
2. THE CONTRACTOR SHALL REMOVE ALL SILT AND DEBRIS DEPOSITED IN DRAINAGE FACILITIES, ROADWAYS AND OTHER AREAS RESULTING FROM HIS WORK. THE COSTS INCURRED FOR ANY NECESSARY REMEDIAL ACTION BY THE DPW, SHALL BE PAYABLE BY THE CONTRACTOR.
3. THE CONTRACTOR, AT HIS OWN EXPENSE, SHALL KEEP THE PROJECT AND SURROUNDING AREAS FREE FROM DUST NUISANCES. THE WORK SHALL BE IN CONFORMANCE WITH THE AIR POLLUTION CONTROL RULES OF THE STATE DEPARTMENT OF HEALTH, HAR 11-60.1, and FUGITIVE DUST.
4. ALL GRADING OPERATIONS SHALL BE PERFORMED IN CONFORMANCE WITH THE APPLICABLE PROVISIONS OF THE HAWAII ADMINISTRATIVE RULES, TITLE 11, CHAPTER 55, WATER POLLUTION CONTROL AND CHAPTER 54, WATER QUALITY STANDARDS, AND TO THE EROSION AND SEDIMENTATION CONTROL STANDARDS AND GUIDELINES OF THE DEPARTMENT OF PUBLIC WORKS, COUNTY OF HAWAII.
5. THE CONTRACTOR SHALL SOD OR PLANT ALL SLOPES AND EXPOSED AREAS IMMEDIATELY AFTER THE GRADING WORK HAS BEEN COMPLETED.
6. FILLS ON SLOPES STEEPER THAN 5:1 SHALL BE KEYED.
7. THE CONTRACTOR SHALL INFORM THE DPW OF THE LOCATION OF THE DISPOSAL AND/OR BORROW SITE(S) REQUIRED FOR THIS PROJECT WHEN AN APPLICATION FOR A GRADING PERMIT IS MADE. THE DISPOSAL AND/OR BORROW SITE(S) MUST ALSO FULFILL THE REQUIREMENTS OF THE GRADING ORDINANCE.
8. NO GRADING WORK SHALL BE DONE ON SATURDAYS, SUNDAYS, AND HOLIDAYS ANYTIME WITHOUT PRIOR APPROVAL FROM THE ENGINEER. GRADING WORK ON NORMAL WORKING DAYS SHALL BETWEEN THE HOURS OF 7:00 A.M. TO 3:00 P.M.
9. FILLS SHALL BE COMPACTED TO 90 PERCENT (90%) OF MAXIMUM DENSITY PER ASTM D-1557 TEST.
10. THE CONTRACTOR SHALL REMOVE ALL VEGETATION BEFORE PLACING FILLS ON NATURAL GROUND SURFACE.

    ESTIMATED EARTHWORK QUANTITIES:

    TOTAL EXCAVATION: 0 CU. YDS.
    TOTAL EMBANKMENT: 566 CU. YDS.

11. THE QUANTITIES SHOWN ARE FOR GRADING PERMIT PURPOSES ONLY. THE CONTRACTOR SHALL BE RESPONSIBLE FOR DETERMINING THE EXACT QUANTITIES FOR BIDDING PURPOSES.

EARTHWORK QUANTITIES SHOWN WERE TAKEN FROM EXISTING GROUND TO FINISH GRADE.

TOTAL AREA TO BE GRADED 0.22 ACRES

SOLID WASTE CONSTRUCTION NOTES:

1. UNLESS OTHERWISE SPECIFIED, THE CONTRACTOR IS RESPONSIBLE FOR THE PROPER HANDLING, STORAGE AND/OR DISPOSAL OF ALL WASTE GENERATED BY THIS CONSTRUCTION INCLUDING GRUBBING AND EXCESS EXCAVATED MATERIAL. ANY MATERIAL BROUGHT TO THE COUNTY LANDFILLS WILL BE SUBJECTED TO THE INSTITUTED TIPPING FEE SYSTEM, WITH NO EXCEPTIONS OR EXEMPTIONS
2. ALL WASTES GENERATED BY CONSTRUCTION, INCLUDING GRUBBING, DEMOLITION AND EXCESS EXCAVATION MATERIAL MAY BE BROUGHT TO THE WEST HAWAII OR THE HILO LANDFILL. THE CONTRACTOR SHALL CHECK WITH THE SOLID WASTE DIVISION FOR DISCLOSURE OF THE CURRENT LANDFILL FEE AND CONSIDERATION OF THAT FEE SHALL BE INCLUDED IN THE CONTRACTOR'S BID SUM.
3. CONSTRUCTION, DEMOLITION AND GRUBBING MATERIAL SHALL NOT BE DEPOSITED AT ANY OF THE COUNTY TRANSFER STATIONS, BUT SHALL BE TRANSPORTED FOR DISPOSAL AT EITHER THE WEST HAWAII OR HILO LANDFILL.
4. ASBESTOS MATERIAL MUST BE SEPARATED, DOUBLE BAGGED AND LANDFILLED IN ACCORDANCE WITH REGULATIONS OF THE SOLID WASTE DIVISION, DEPARTMENT OF ENVIRONMENTAL MANAGEMENT. INFORMATION MAY BE OBTAINED BY CALLING THE DIVISION AT (808) 961-8339 BETWEEN 7:00 AM AND 4:00 PM MONDAY THROUGH FRIDAY.
5. ALL GREEN WASTE GENERATED FROM GRUBBING WORK, SHALL BE SEPARATED AND DEPOSITED AT THE GREEN WASTE AREA AT THE HILO OR WEST HAWAII DISPOSAL SITE. (NOTE: NO TREATED LUMBER IS ALLOWED IN THE GREEN WASTE)
6. RECYCLE AS MUCH OF THE SOLID WASTE MATERIAL GENERATED BY THIS CONSTRUCTION AS POSSIBLE. EXCESS MATERIAL SHALL BE DISPOSED OF PROPERLY.
7. CONTRACTOR SHALL SUBMIT A REPORT PRIOR TO THE COMMENCEMENT OF WORK, PER SOLID WASTE DEMOLITION PLAN GUIDELINES, AS AMMENDED. AVAILABLE AT THE COUNTY OF HAWAII, DEPARTMENT OF ENVIRONMENTAL MANAGEMENT OFFICE.

NOTES FOR WORK WITHIN THE ROAD-OF-WAY

1. THE CONTRACTOR SHALL VERIFY THE LOCATION OF ALL EXISTING UTILITIES, WHETHER SHOWN ON THE PLAN OR NOT, AND SHALL BE RESPONSIBLE FOR THE REPAIR OR REPLACEMENT OF SAME IN THE EVENT OF DAMAGES DUE TO HIS CONSTRUCTION PARACTICES. THE CONTRACTOR SHALL COORDINATE HIS WORK WITH THE RESPECTIVE UTILITY COMPANIES.
2. THE CONTRACTOR SHALL PROVIDE AND INSTALL ALL TRAFFIC CONTROL DEVICES IN CONFORMANCE WITH THE CURRENT EDITION OF THE "MANUAL ON UNIFORM TRAFFIC CONTROL DEVICES FOR STREETS AND HIGHWAYS," AND AS DIRECTED BY THE ENGINEER.
3. THE PROPOSED UTILITY LINE LOCATION SHALL BE LAID OUT IN THE FIELD PRIOR TO THE CONDUCTING OF THE FIELD REVIEW BY THE ENGINEER.
4. FIELD ADJUSTMENTS SHALL BE MADE AS DIRECTED BY THE ENGINEER PRIOR TO THE COMMENCEMENT OF ANY UTILITY LINE WORK.
5. THE CONTRACTOR SHALL PROVIDE AT LEASE ONE (1) LANE FOR TRAFFIC MOVEMENT AT ALL TIMES. TWO (2) LANES FOR TRAFFIC MOVEMENT SHALL BE PROVIDED BETWEEN THE HOURS OF 3:00 P.M. TO 8:00 A.M.
6. THE EXISTING PAVEMENT SHALL BE SAW-CUT BEFORE COMMENCEMENT OF TRENCHING WORK.
7. ANY PAVEMENT OUTSIDE THE CONTRACT ZONE LIMITS DAMAGED AS A RESULT OF CONSTRUCTION OPERATIONS SHALL BE RESTORED TO ITS ORIGINAL CONDITION, OR BETTER, AS DIRECTED BY THE ENGINEER.
8. A TEMPORARY COLD MIX PATCH SHALL BE APPLIED IMMEDIATELY UPON COMPLETION OF THE BACKFILLING OPERATION AND SHALL BE MAINTAINED BY THE CONTRACTOR UNTIL A PERMANENT PATCH IS AUTHORIZED BY THE ENGINEER.
9. NO MATERIAL, EXCEPT THE TRENCH EXCAVATED MATERIAL, SHALL BE STOCKPILED CLOSER THAN SIX (6) FEET FROM THE EXISTING EDGE OF PAVEMENT.
10. NO CONSTRUCTION EQUIPMENT SHALL BE PARKED WITHIN THE ROAD RIGHT-OF-WAY IN SUCH A MANNER THAT THE EQUIPMENT WILL OBSTRUCT THE NORMAL MOVEMENT AND SIGHT DISTANCE OF THE DRIVING MOTORIST, EXCEPT DURING ACTUAL WORKING HOURS.
11. EXCEPT DURING ACTUAL WORKING HOURS, ALL SIGNS THAT DO NOT PERTAIN TO THE CONSTRUCTION ACTIVITY, SUCH AS "MEN WORKING" AND "FLAGMAN AHEAD" SHALL BE COVERED OR LAID DOWN. HOWEVER, ALL SIGNS NECESSARY FOR THE SAFETY OF THE PUBLIC SHALL BE MAINTAINED.
12. ANY PAVEMENT MARKINGS, STRUCTURES, AND APPURTENANCES (WITHIN OR OUTSIDE OF THE CONTRACT ZONE LIMITS) DAMAGED AND/OR WORN AWAY UNDER THE PERMIT SHALL BE REPAINTED OR RECONSTRUCTED AS DIRECTED BY THE ENGINEER.
13. NO TRENCHING SHALL BE LEFT OPEN FOR MORE THAN FIVE (5) WORKING DAYS.
14. SHOULD TRENCING OCCUR THROUGH AN EXISTING SIDEWALK, OR SHOULD DAMAGES OCCUR TO THE SIDEWALK AS A RESULT OF ANY CONSTRUCTION WORK, THE FOLLOWING PROCEDURE SHALL BE UTILIZED TO REPAIR THE SIDEWALK:
    A. ALL PORTLAND CEMENT CONCRETE TO BE REMOVED SHALL FIRST BE CUT WITH A CONCRETE SAW THAT HAS A DIAMOND OR CARBORUNDUM ABRASIVE WHEEL. THOSE CUTS SHALL BE MADE TO A DEPTH EQUAL TO AT LEAST ONE-FOURTH OF THE DEPTH OF THE SLAB, OR ENOUGH AS IS DEEMED NECESSARY BY THE DEPARTMENT OF PUBLIC WORKS, TO PERMIT BREAKING OUT THE BALANCE OF THE CONCRETE WITHOUT SPALLING OFF THE EXPOSED EDGES OF THE SLAB LEFT IN PLACE.
    B. IF ANY CONCRETE BLOCK IS TOUCHED, THE WHOLE BLOCK SHALL BE REMOVED AND LATER REPLACED, UNLESS A MINOR VARIATION IS AUTHORIZED BY THE DPW OR IT'S REPRESENTATIVE.
    C. ANY DAMAGES TO ADJACENT AREAS DUE TO SETTLEMENT OR TO ANY OTHER EFFECTS WHATSOEVER CAUSED BY THE CONSTRUCTION WORK SHALL BE PROPERLY REPAIRED AND CORRECTED.

STRUCTURAL BEST MANAGEMENT PRACTICES (BMPS):

1. THE CONTRACTOR SHALL INSPECT EROSION AND SEDIMENT CONTROL MEASURES WEEKLY AND AFTER 0.5 INCHES OF RAINFALL.
2. IF REPAIRS TO OR MAINTENANCE OF THE CONTRACTOR'S EROSION CONTROL MEASURES ARE NECESSARY, THE CONTRACTOR SHALL INITIATE THE REPAIRS OR MAINTENANCE WITHIN TWENTY-FOUR (24) HOURS AFTER INSPECTION AND NOTING OF THE DEFICIENCY.

   REPAIRS AND MAINTENANCE MAY INCLUDE THE FOLLOWING:

   A. REPLACING GEO-JUTE FABRIC WHEN TEARS ARE FOUND, AND ENSURING THAT THE FABRIC IS SECURELY ATTACHED FIRMLY IN THE GROUND.
   B. RESTORING BARE SPOTS AND WASHOUTS, AND ENSURING HEALTY PLANT GROWTH IN BOTH TEMPORARY AND PERMANENT SEEDED AND PLANTED AREAS.
3. THE CONTRACTOR SHALL MAKE EVERY EFFORT TO INSTALL STRUCTURAL BMPS AS NEAR TO THE POLLUTANT SOURCE AS PRACTICABLE. INLET PROTECTION SHALL SERVE AS THE LAST MEASURE TO PREVENT POLLUTANTS FROM ENTERING THE STORM DRAIN SYSTEM.
4. THE CONTRACTOR SHALL BACKFILL TRENCHES AND PROVIDE COLD MIX PATCHES TO MATCH ADJOINING PAVEMENT GRADE AT THE END OF EACH WORK DAY.
5. STABILIZED CONSTRUCTION ENTRANCE:

   ALL POINTS OF EGRESS AND INGRESS TO A SITE SHALL BE PROTECTED WITH A STABILIZED CONSTRUCTION ENTRANCE, 20' X 20' X 8" THICK CRUSHED ROCK LAYER OVER A GEOTEXTILE FABRIC BASE IN THE LOCATION(S) SHOWN ON THE EROSION CONTROL PLAN.
6. DUST CONTROL:

   DUST CONTROL, INCLUDING DUST BARRIERS, WATERING, ETC., SHOULD BE APPLIED TO REDUCE DUST EMISSIONS. THE CONTRACTOR, AT HIS OWN EXPENSE, SHALL KEEP THE PROJECT AREA AND SURROUNDING AREA FREE FROM DUST NUISANCE. THE WORK SHALL BE IN CONFORMANCE WITH THE AIR POLLUTION CONTROL STANDARDS CONTAINED IN HAWAII ADMINISTRATIVE RULES: CHAPTER 11-60, "AIR POLLUTION CONTROL",
7. SEDIMENT BARRIERS OR TRAPS:

   SEDIMENT TRAPPING DEVICES SUCH AS FENCES, TRAPS, BASINS OR BARRIERS SHALL BE USED DOWN SLOPE OF ALL DISTURBED AREAS AND AROUND THE BASE OF ALL MATERIAL STOCKPILES.
8. INLET PROTECTION:

   ALL STORM DRAIN INLETS ON SITE, AND THOSE OFFSITE WHICH MAY RECEIVE RUNOFF FROM THE SITE SHALL USE AN INLET PROTECTION DEVICE.
9. PERMANENT STABILIZATION:

   ALL DISTURBED AREAS SHALL BE PERMANENTLY STABILIZED PRIOR TO REMOVING EROSION AND SEDIMENT MEASURES. ALL TEMPORARY EROSION AND SEDIMENT CONTROL MEASURES SHALL BE REMOVED WITHIN 30 DAYS AFTER FINAL SITE STABILIZATION OR AFTER THE TEMPORARY MEASURES ARE NO LONGER NEEDED. TRAPPED SEDIMENT AND AREAS OF DISTURBED SOIL WHICH RESULT FROM THE REMOVAL OF THE TEMPORARY MEASURES SHALL BE IMMEDIATELY PERMANENTLY STABILIZED.

LEGEND:

A.C.	ASPHALT CONCRETE	NIC	NOT IN CONTRACT
ARV	AIR RELEASE VALVE	OH	OVERHEAD
BOT.	BOTTOM	PAV'T	PAVEMENT
BW	BOTTOM WALL	PE	PAD ELEVATION
C.O.	CLEAN OUT	S	SEWER OR SPREAD
COCN.	CONCRETE	SDMH	STORM DRAIN MANHOLE
CRM	CONCRETE RUBBLE MASONARY	SMH	SEWER MANHOLE
D	DIAMETER OR DRAIN	SS	SANITARY SEWER
E/ELEC.	ELECTRIC	ST.	STREET
ELEV./E	ELEVATION	STA.	STATION
FFE	FINISH FLOOR ELEVATION	TB	TOP OF BOX
F.H.	FIRE HYDRANT	TG	TOP OF GRATE
G.P.	GUARD POST/GUY POLE/GATE POST	TP	TOP PIPE
H	HEIGHT	TS	TOP STEM
IG	INVERT GRADE	TV	TOP VALVE
INV.	INVERT	TW	TOP WALL
M.B.	MAIL BOX	U.P.	UTILITY POLE
MH	MANHOLE	U.P./S.L.	UTILITY POLE W/STREET LIGHT
MON	MONUMENT	W	WATER
		WM	WATER METER
		WMH	WATER MANHOLE
		WV	WATER VALVE BOX

No.	DATE	DWG.	CHK.	REVISIONS
△				
△				
△				

DATE | PRINTS TO

This work was prepared by me or under my supervision and construction of this project will be under my observation. Exp. 04-30-16

Dennis K.W. Lee
Wesley R. Segawa & Associates, Inc.

DENNIS K. W. LEE LICENSED PROFESSIONAL ENGINEER No. 4004-C HAWAII U.S.A.

WRSA
Wesley R. Segawa and Associates, Inc.
Committed to Quality Performance & Value
Civil & Structural Engineers
101 Silva Street, Suite 201 Hilo, Hawaii 96720-4755
Telephone: (808) 935-4677 Fax: (808) 935-2070

Project Title: KEAUKAHA TRACT 1 IMPROVEMENTS

Sheet Title: LOTS 279-A & 279-B MISCELLANEOUS NOTES

DESIGN BY: DRB
DRAWN BY: DRB
CHECKED BY: DL
APPROVED BY: DL
DATE: SEPT. 2015
SCALE: AS NOTED
FILE No. W1302.47

DRAWING No. C-1

SHEET No. 2 OF 9 SHTS.

UTILITY POLE NOTES AND SPECIFICATIONS:

MAXIMUM-200 AMP SERVICE

IT SHALL BE THE CUSTOMER'S RESPONSIBILITY FOR COMPLIANCE WITH THE NATIONAL ELECTRICAL CODE AND ANY GOVERNING AUTHORITY FOR ALL EQUIPMENT BEYOND THE POINT OF CONNECTION. THE CUSTOMER IS ADVISED TO USE THE SERVICES OF A QUALIFIED ELECTRICIAN TO ASSURE COMPLIANCE WITH ALL CODES AND REGULATIONS.

1. DESCRIPTION:

   PERMANENT - MOBILE HOMES, CAMPS, WATER WELLS, AND ANY OTHER CONNECTION NOT CONSIDERED TEMPORARY.

   TEMPORARY - CONSTRUCTION, SPECIAL EVENTS, ETC.

2. METER POLES ARE FURNISHED AND INSTALLED BY CUSTOMER. SPECIFICATIONS SHOWN ON THE DRAWING AND DESCRIBED HERE SHALL BE CONSIDERED MINIMUM REQUIREMENTS.

3. PERMANENT METER POLES MUST BE 20' (FEET) IN LENGTH AND BE SET 5' (FEET) DEEP. A PERMANENT METER POLE MUST BE A TREATED ROUND POLE WITH A MINIMUM TOP DIAMETER OF 5" (INCHES) OR A TREATED 6" X 6" (INCH) POLE.

   IT WILL BE THE RESPONSIBILITY OF THE CUSTOMER TO SECURE THE POLE IN A VERTICAL POSITION. IF THE GROUND IS NOT ADEQUATE TO SUPPORT THE POLE, A GUY WILL HAVE TO BE INSTALLED BY THE CUSTOMER.

4. TEMPORARY METER POLES MUST BE 16' (FEET) IN LENGTH AND BE SET 4' (FEET) DEEP. A TEMPORARY METER POLE MUST BE A TREATED POLE WITH A MINIMUM SIZE OF 4" X 6" (INCHES). A TEMPORARY METER POLE WITH A SERVICE LENGTH OF 75' (FEET) OR GREATER MUST BE BRACED AS SHOWN ON THE TEMPORARY METER POLE DRAWING.

5. SERVICE ENTRANCE CONDUIT FURNISHED AND INSTALLED BY CUSTOMER. SERVICE ENTRANCE CONDUIT SHALL BE SCHEDULE 40 PVC OR RIGID CONDUIT, NO EMT, AND SHALL BE SIZED IN ACCORDANCE WITH THE NATIONAL ELECTRICAL CODE OR GOVERNING AUTHORITY. A MINIMUM OF 3 CONDUIT STRAPS ARE REQUIRED, WITH ONE (1) STRAP BEING NO MORE THAN 12" (INCHES) FROM THE WEATHER HEAD.

6. SERVICE ENTRANCE CONDUCTORS FROM THE POINT OF CONNECTION TO METER BASE, TO THE MAIN DISCONNECT, FURNISHED AND INSTALLED BY CUSTOMER.

   SERVICE ENTRANCE CONDUCTORS SHALL BE COPPER ONLY AND SIZED ACCORDING TO LOAD, AS REQUIRED BY THE NATIONAL ELECTRIC CODE OR GOVERNING AUTHORITY.

   THE NEUTRAL OF THE SERVICE ENTRANCE CONDUCTORS CAN BE TWO (2) SIZES SMALLER THAN THE OTHER CONDUCTORS AND SHALL BE IDENTIFIED WITH GRAY AND WHITE TAPE AT THE WEATHER HEAD AND IN THE METER BASE. AN EXTENSION OF 18" (INCHES) OF SERVICE CONDUCTOR IS REQUIRED AT THE WEATHER HEAD.

7. MAIN DISCONNECT, EITHER A SINGLE MAIN OR A MAIN IN A DISTRIBUTION PANEL, FURNISHED AND INSTALLED BY CUSTOMER. MAIN DISCONNECT SHALL BE SIZED ACCORDING TO LOAD, AS REQUIRED BY THE NATIONAL ELECTRICAL CODE OR GOVERNING AUTHORITY.

   MAIN DISCONNECTS AND ANY OTHER ELECTRICAL EQUIPMENT THAT IS EXPOSED TO THE ELEMENTS MUST BE OF A WEATHERPROOF AND WATER TIGHT DESIGN.

8. METER BASE AND K-10 SERVICE HOLDER TO BE FURNISHED AND INSTALLED BY CUSTOMER. THEY MUST CONFORM TO HELCO STANDARDS AND BE COMPATIBLE WITH HELCO METERING .THE METER BASE SHALL BE MOUNTED BETWEEN 5' AND 6' (FEET) ABOVE FINISHED GRADE. THE K10C SHALL BE MOUNTED 6" (INCHES) FROM THE TOP OF THE METER POLE IN THE DIRECTION OF HELCO'S SERVICE CABLE. PRE-DRILLING A PILOT HOLE FOR THE K10C IS RECOMMENDED.

9. A METER BASE GROUND SHALL EXTEND FROM THE NEUTRAL OR GROUNDING LUG IN THE METER BASE TO GROUND ROD. THE METER BASE GROUND SHALL BE A MINIMUM #6. SOFT DRAWN COPPER WIRE. THE METER BASE GROUND WIRE MUST BE CONNECTED IN THE GROUND WIRE LUG, WHERE PROVIDED, AND NOT IN THE SERVICE NEUTRAL LUG. THE METER BASE GROUND WIRE MUST BE STAPLED EVERY SIX (6) INCHES.

10. THE POLE GROUNDING CONDUCTOR SHALL BE A MINIMUM #6, BARE, SOFT DRAWN COPPER WIRE AND EXTEND FROM 6" (INCHES) ABOVE THE TOP OF THE METER POLE TO THE GROUND ROD. IT IS INSTALLED 90 AROUND THE POLE TO THE GROUND ROD. IT IS INSTALLED 90 AROUND THE POLE FROM THE SERVICE ENTRANCE CONDUIT. THE POLE GROUNDING CONDUCTOR MUST BE STAPLED, STARTING FROM THE TOP OF THE POLE AT 2' (FOOT) INTERVALS UNTIL A POINT 6' (FEET) ABOVE THE GROUND IS REACHED, THEN STAPLED EVERY 6" (INCHES).

11. GROUND RODS SHALL BE 5/8" X 8" COPPER WELD OR 1/2" X 8' COPPER. PERMANENT METER POLE GROUND RODS SHALL BE SET 1" (INCH) BELOW FINISHED GRADE.

    TEMPORARY METER POLE GROUND RODS CAN BE SET 4" (INCHES) ABOVE FINISHED GRADE.

12. ALL UNUSED OR OPEN HOLES IN THE METER BASE, MAIN DISCONNECTOR DISTRIBUSTION PANEL SHALL BE PLUGGED WITH WATERTIGHT PLUGS.

13. INSPECTION: IF A GOVERNING AUTHORITY REQUIRES INSPECTION, INSPECTION TAG MUST BE IN PLACE AND MARKED APPROVED BEFORE HELCO WILL CONNECT SERVICE.

No.	DATE	DWG. CHK.	REVISIONS
1			
2			
3			

PRINTS TO

DATE

This work was prepared by me or under my supervision and construction of this project will be under my observation. Exp. 04-30-16

Wesley R. Segawa & Associates, Inc.

DENNIS K. W. LEE — LICENSED PROFESSIONAL ENGINEER — No. 4004-C — U.S.A. HAWAII

WRSA
Wesley R. Segawa and Associates, Inc.
Committed to Quality Performance & Value
Civil & Structural Engineers
101 Silva Street, Suite 201 Hilo, Hawaii 96720-4795
Telephone: (808) 935-4677 Fax: (808) 935-2070

Project Title: KEAUKAHA TRACT 1 IMPROVEMENTS
LOTS 279-A & 279-B

Sheet Title: UTILITY POLE NOTES & SPEC.

DESIGN BY:	DRB
DRAWN BY:	DRB
CHECKED BY:	DL
APPROVED BY:	DL
DATE:	SEPT. 2015
SCALE:	AS NOTED
FILE No.	W1302.47

DRAWING No. C-2

SHEET No. 3 OF 9 SHTS.

WATERLINE NOTES:

1. ALL WORK SHALL BE DONE ACCORDING TO THE WATER SYSTEM STANDARDS, STATE OF HAWAII, DATED 2002, AS AMENDED.
2. ALL EXISTING WATERLINES, WATERLINE, APPURTENANCES AND OTHER UTILITY LOCATIONS SHOWN ON THE PLANS ARE OBTAINED FROM THE LATEST RELIABLE SOURCES. THE CONTRACTOR SHALL BE RESPONSIBLE TO VERITY THE EXACT LOCATION OF ALL UTILITIES IN THE FIELD AND SHALL BEAR ALL COSTS FOR DAMAGE DONE DURING THE CONTRACT PERIOD.
3. THE CONTRACTOR SHALL INFORM THE D.W.S. ENGINEER 72 HOURS PRIOR TO THE BEGINNING OF ANY WATERLINE WORK AND TWO WEEKS PRIOR TO ANY CONNECTION, CHLORINATION, SHUT-OFF OR RELOCATION WORK.
4. ALL CONNECTIONS TO THE WATER SYSTEMS SHALL BE DONE BY THE D.W.S. THE CONTRACTOR SHALL PERFORM ALL EXCAVATION, BACKFILL, ROAD REPAIR, TRAFFIC CONTROL, AND PROVIDE EQUIPMENT AND MATERIALS NECESSARY TO COMPLETE THE CONNECTION.
5. THE CONTRACTOR SHALL PAY FOR ALL WORK, EQUIPMENT, AND MATERIAL FURNISHED BY THE D.W.S.
6. MINIMUM VERTICAL CLEARANCE BETWEEN WATERLINES AND OTHER UTILITIES SHALL BE 12-INCHES PROVIDED THE OTHER UTILITY IS CONCRETE JACKETED, AND 18-INCHES IF NO CONCRETE JACKETS ARE USED. IN ALL APPLICABLE INSTANCES, THE WATERLINES SHALL BE AT A GRADE HIGHER THAN OTHER UTILITIES. UTILIZE PERPENDICULAR CROSSINGS WHERE PRACTICABLE FOR WATERLINES, CENTER FULL PIPE LENGTHS AT UTILITY CROSSINGS WHENEVER POSSIBLE
7. MINIMUM HORIZONTAL CLEARANCE BETWEEN WATERLINES AND OTHER UTILITIES SHALL BE 8-FEET (CLEAR SPACE – NOT CENTERLINE TO CENTERLINE) FOR ROAD RIGHT-OF-WAYS OF 50 FEET OF LESS, AND 10-FEET FOR ROAD RIGHT-OF-WAYS OF MORE THAN 50 FEET.
8. ALL WATER SYSTEM PIPELINES, 4-INCHES OR LARGER IN DIAMETER, SHALL BE DUCTILE IRON, PUSH ON JOINTS, CLASS 52, AND ALL PIPELINES SMALLER THAN 4-INCHES IN DIAMETER SHALL BE SOFT COPPER, TYPE "K:, UNLESS OTHERWISE SPECIFIED.
9. PIPE CUSHION FOR COPPER SERVICE LATERALS SHALL BE NO. 4 MANUFACTURED FINE SAND.
10. METER BOXES FOR 5/8-INCH METERS PLACED OUTSIDE OF PAYMENT TO BE TYPE "B" PER STD DETAILS M1 & M2. METER BOXES FOR 1-INCH METERS OR FOR 5/8-INCH STD DETAIL M3.
11. RELOCATION OF EXISTING METERS SHALL BE DONE UNDER D.W.S. SUPERVISION. RELOCATION OF CUSTOMER SERVICE LINES TO RELOCATED METERS SHALL BE COPPER (TYPE "K") AND DONE BY THE CONTRACTOR. ALL WORK AND MATERIALS SHALL BE PROVIDED BY THE CONTRACTOR AND CONSIDERED INCIDENTAL TO THE RELOCATION WORK. EXISTING METER BOXES DAMAGED BY THE CONTRACTOR SHALL BE REPLACED AT THE CONTRACTOR'S COST. WHEN APPLICABLE, A DIELECTRIC UNION SHALL BE USED TO CONNECT THE COPPER PIPE TO THE CUSTOMER'S GALVANIZED IRON (G.I.) PIPE.
12. SOLDER (1/8-INCH DIA.) AND FLUX USED SHALL NOT CONTAIN MORE THAN 0.2% LEAD
13. LOTS REQUIRING A DEPARTMENT OF WATER SUPPLY APPROVED BACKFLOW PREVENTION ASSEMBLY SHALL HAVE ONE. IT MUST BE INSTALLED ON PRIVATE PROPERTY IN ACCORDANCE WITH D.W.S. STANDARD DETAIL NO. V9 AND DEPARTMENTAL STAFF MUST APPROVE THE INSTALLATION BEFORE WATER SERVICE CAN BE STARTED.
14. WHERE WATER SHUT–OFF OF MORE THAN 3 HOURS BECOMES NECESSARY, THE CONTRACTOR, AT HIS OWN EXPENSE, SHALL PROVIDE A TEMPORARARY BY–PASS LINE. THE DWS ENGINEER SHALL DETERMINE THE BY–PASS LINE SIZE. IF NECESSARY, THE DWS ENGINEER MAY REQUIRE A BY–PASS LINE, REGARDLESS OF THE EXPECTED SHUT–OFF PERIOD.
15. THE CONTRACTOR SHALL BE RESPONSIBLE FOR RECORD DRAWINGS (AS–BUILT DRAWINGS) AND THE LICENSED ENGINEER SHALL CERTIFY THE DRAWINGS AS TO ACCURACY AND SUBMIT THE DRAWINGS AND AS–BUILT TRACINGS TO THE DWS.
16. AFTER JANUARY 4, 2014, ALL BRASS PRODUCTS MUST CONFORM TO NSF STANDARD 61 AND NSF STANDARD 372 OF THE SDWA, AND BE CERTIFIED AS "LEAD–FREE" BY THE MANUFACTURER. "LEAD–FREE" IS DEFINED AS THE ALLOWABLE LEAD CONTENT OF NOT MORE THAN 0.25% IN THE WETTED SURFACE. CERTIFICATION FROM THE MANUFACTURER MUST BE SUBMITTED TO THE DEPARTMENT OF WATER SUPPLY FOR REVIEW AND APPROVAL PRIOR TO INSTALLATION. ANY BRASS PRODUCT INSTALLED WITHOUT APPROVAL MUST BE REMOVED AT NO EXPENSE TO THE DEPARTMENT.
17. BOXED WATERLINE DETAILS BELOW TAKEN FROM THE WATER SYSTEM STANDARDS.

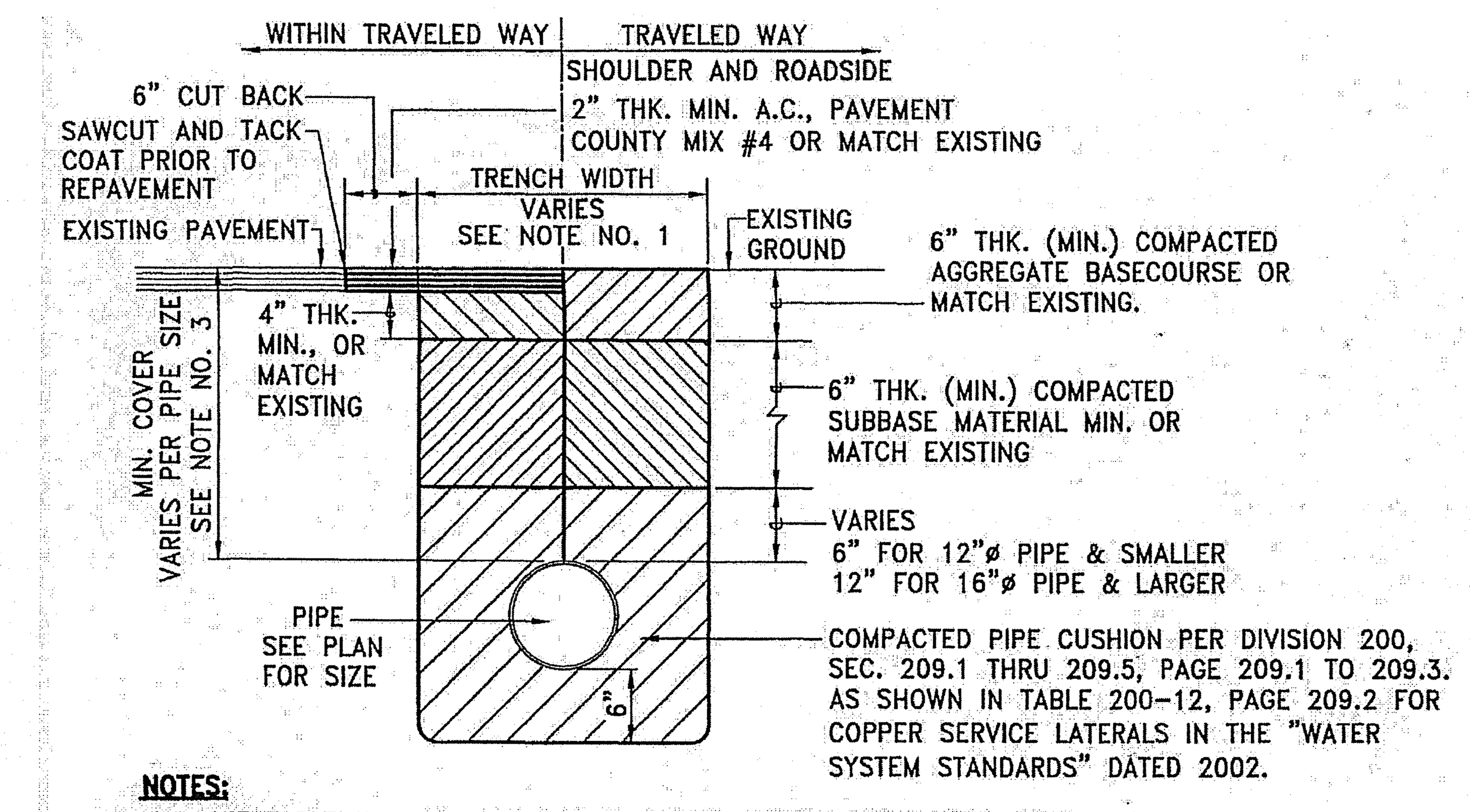

NOTES:
1. SEE TABLE 300–1, PAGE 302–3, WATER SYSTEM STANDARDS, 2002.
2. LOCAL MATERIAL MAY BE USED OUTSIDE SHOULDER AREA.
3. SEE TABLE 100–3, PAGE 102.4, WATER SYSTEM STANDARDS, 2002.
4. DRIVEWAY RESTORATION
   - A. WHERE EXISTING DRIVEWAY IS CONCRETE, 4" THK. CONCRETE REINFORCED WITH 6 X 6 X 10/10 WWM ON 4" THK. BASECOURSE SHALL BE USED IN LIEU OF THE ABOVE SECTION.
   - B. WHERE AN EXISTING DRIVEWAY IS UNPAVED, THE DRIVEWAY SHALL BE RESTORED TO A CONDITION EQUAL TO OR BETTER THAN THE EXISTING DRIVEWAY.
   - C. WHERE EXISTING DRIVEWAY IS PAVED, THE DRIVEWAY SHALL BE RESTORED AS SHOWN ABOVE
   - D. CONTRACTOR SHALL NOTIFY THE OWNER OF THE DRIVEWAY 48 HOURS BEFORE COMMENCEMENT OF ANY WORKS

1 / C–3 TYPICAL TRENCH AND PAVEMENT REPAIR SECTION FOR WATERLINES
NOT TO SCALE

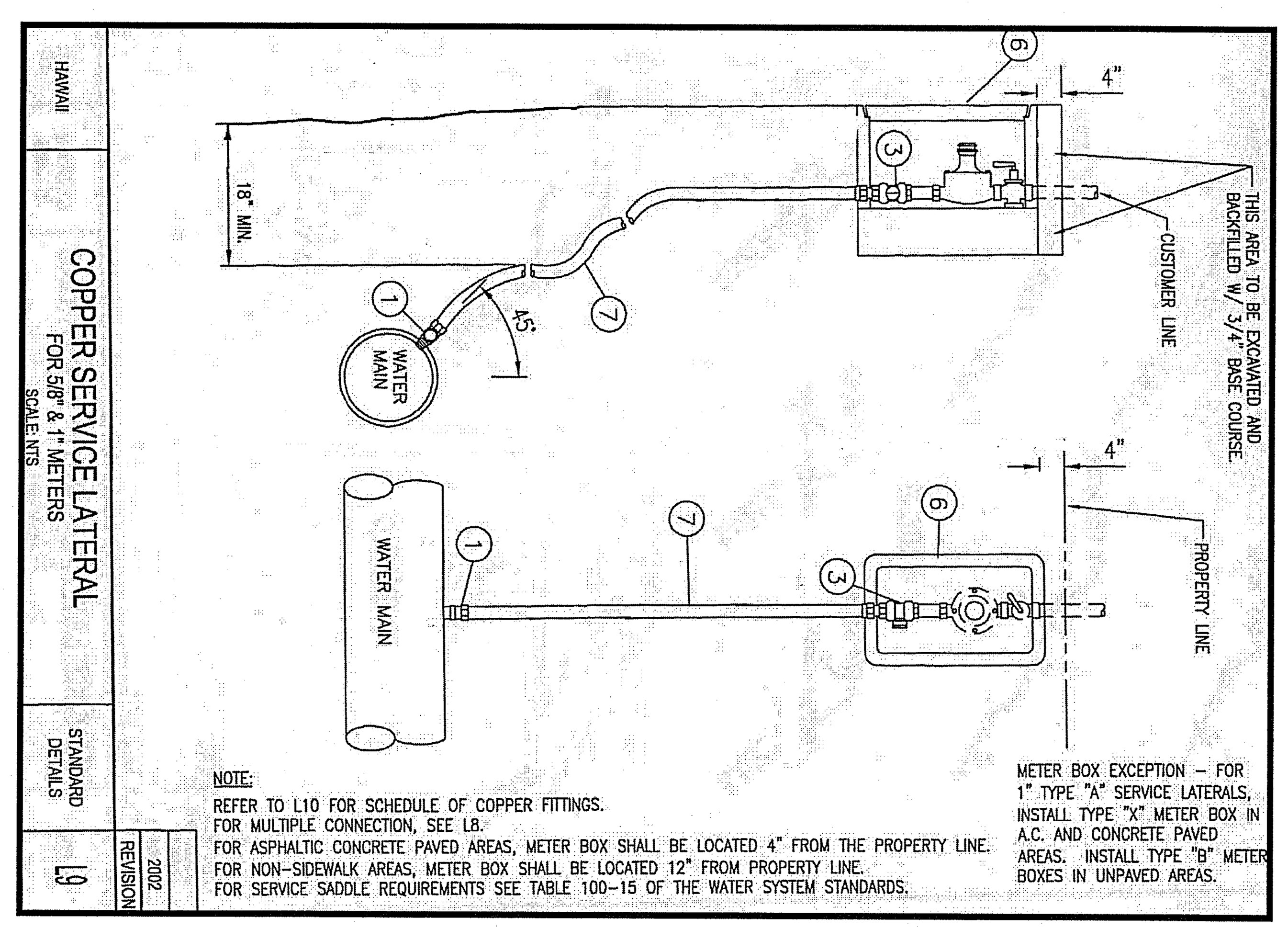

2 / C–3 TYPICAL SINGLE SERVICE LATERAL
NOT TO SCALE

HAWAII — SERVICE LATERAL/CONNECTION MATERIAL SCHEDULE — SCALE: NTS — STANDARD DETAILS — L10 — 2002 REVISION

SERVICE LATERAL AND CONNECTION MATERIAL SCHEDULE

TYPE	SIZE	BRONZE BALL CORP. (a) SIZE	QNT.	BRONZE CURB STOP (b) SIZE	QNT.	BRONZE CURB STOP (c) SIZE	QNT.	TEE CxCxC STYLE SIZE	QNT.	90° ELBOW CxC STYLE SIZE	QNT.	METER BOX QNT.	COPPER TUBING TYPE K SIZE	METER SIZE	QNT.	CUSTOMER VALVE (d) SIZE	QNT.
A	1	1X1	1			1*	1					1	1	5/8	1	3/4	1
	1- 1/2	1-1/2X1-1/2	1			1-1/2	1					1	1- 1/2	1	1	1	1
	2	2X2	1			2	1					1	2	1- 1/2	1	1-1/2	1
	2- 1/2	2X2	1			2	1					1	2- 1/2	2	1	2	1
B	1- 1/2	1-1/2X1-1/2	1	1-1/2	1	1*	2	1 x 1 x 1-1/2	1			2	1- 1/2	5/8	2	3/4	2
	1- 1/2	1-1/2x1-1/2	1	1-1/2	1	1-1/2"	2	1-1/2X1-1/2X1-1/2	1			2	1- 1/2	1	2	1	2
	2- 1/2	2X2	1	2-1/2	1	2	2	2 X 2 X 2- 1/2	1			2	2- 1/2	1- 1/2	2	1-1/2	2
C	1- 1/2	1-1/2X1-1/2	1	1-1/2	1	1*	2	1 X 1 X 1- 1/2	1	1	2	2	1- 1/2	5/8	2	3/4	2
	1- 1/2	1-1/2x1-1/2	1	1-1/2	1	1-1/2"	2	1-1/2X1-1/2X1-1/2	1	1- 1/2	2	2	1- 1/2	1	2	1	2
	2- 1/2	2X2	1	2-1/2	1	2	2	2 X 2 X 2- 1/2	1	2	2	2	2- 1/2	1-1/2	2	1-1/2	2
D	1- 1/2	1-1/2x1-1/2	1	1-1/2	1	1*	3	1-1/2x1x1-1/2 1- 1/2 X 1 X 1	1 1	1	2	3	1- 1/2	5/8	3	3/4	3
ITEM NO.		①		②		③		④		⑤		⑥	⑦	⑧		⑨	

(a) BRONZE BALL CORP.
INLET: AWWA TAPER
OUTLET: PACK JOINT, "M.P.T. W/ADAPTER (F.P.T. x PACK JOINT)" OR
M.P.T. W/ BRASS UNION (FPT X C)

(b) BRONZE BALL CURB STOP
INLET–OUTLET: PACK JOINTS OR
FPT W/ ADAPTER (C X MPT)

(*) 1" SERVICE CONNECTION
INLET: (TO FIT 1" COPPER PIPE)
OUTLET: METER COUPLING FOR 5/8" x 3/4" METER

(c) BRONZE BALL CURB STOP
INLET: PACK JOINT
OUTLET: METER COUPLING OR FPT W/BRASS BUSHING
OR
INLET: FPT W/ ADAPTER (C X MPT)
OUTLET: FPT W/BRASS BUSHING
OR
INLET: FPT W/ ADAPTER (C X MPT)
OUTLET: FPT W/ BRASS BUSHING AND METER COUPLING.

(d) CUSTOMER VALVE: BALL VALVE WITH HAND LEVER
INLET: METER COUPLING OR FLANGE, PACK JOINT, OR FPT.
OUTLET: FPT OR PACK JOINT.

3 / C–3 SCHEDULE OF COPPER FITTINGS
NOT TO SCALE

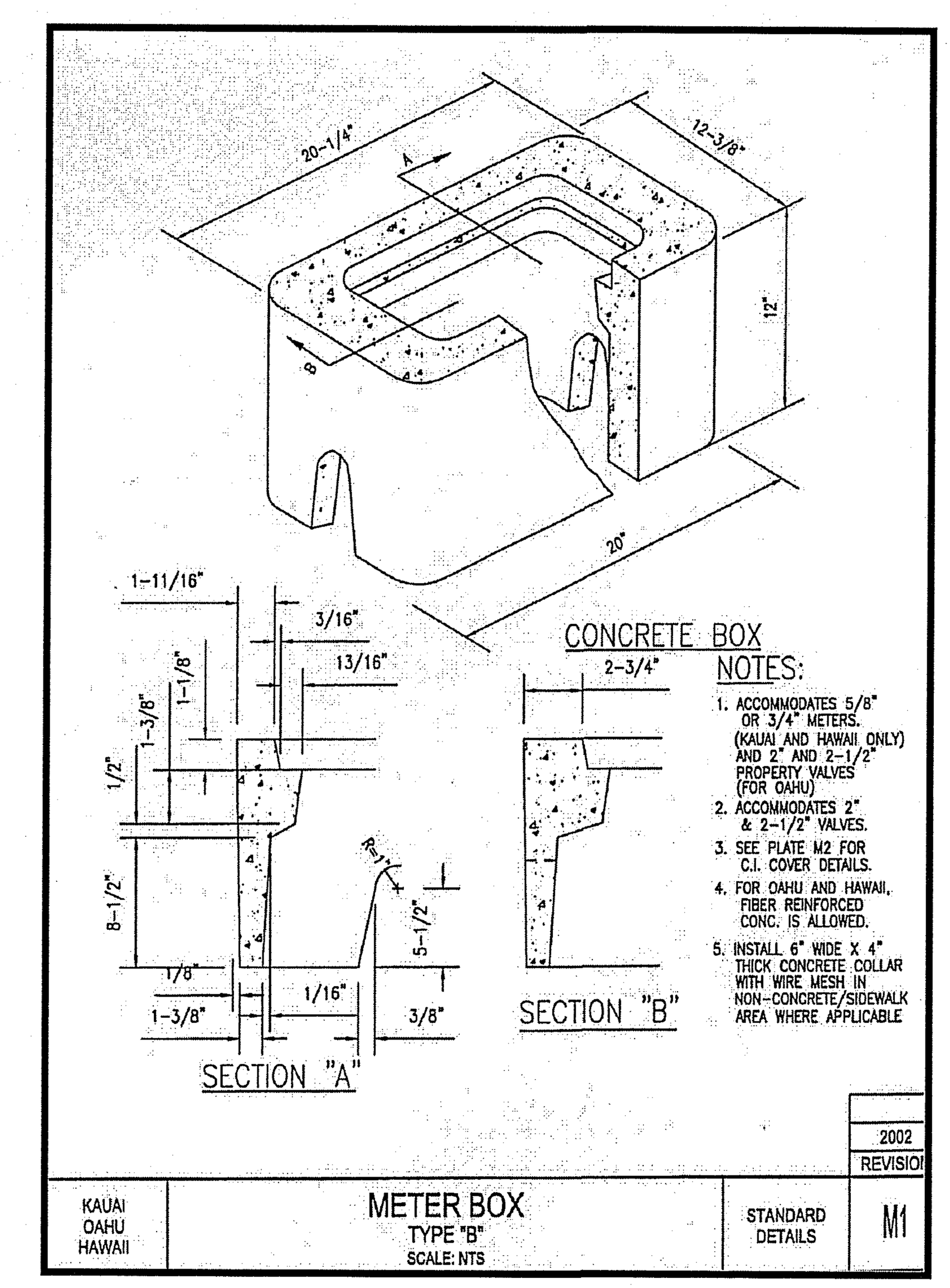

4 / C–3 METER BOX TYPE "B"
NOT TO SCALE

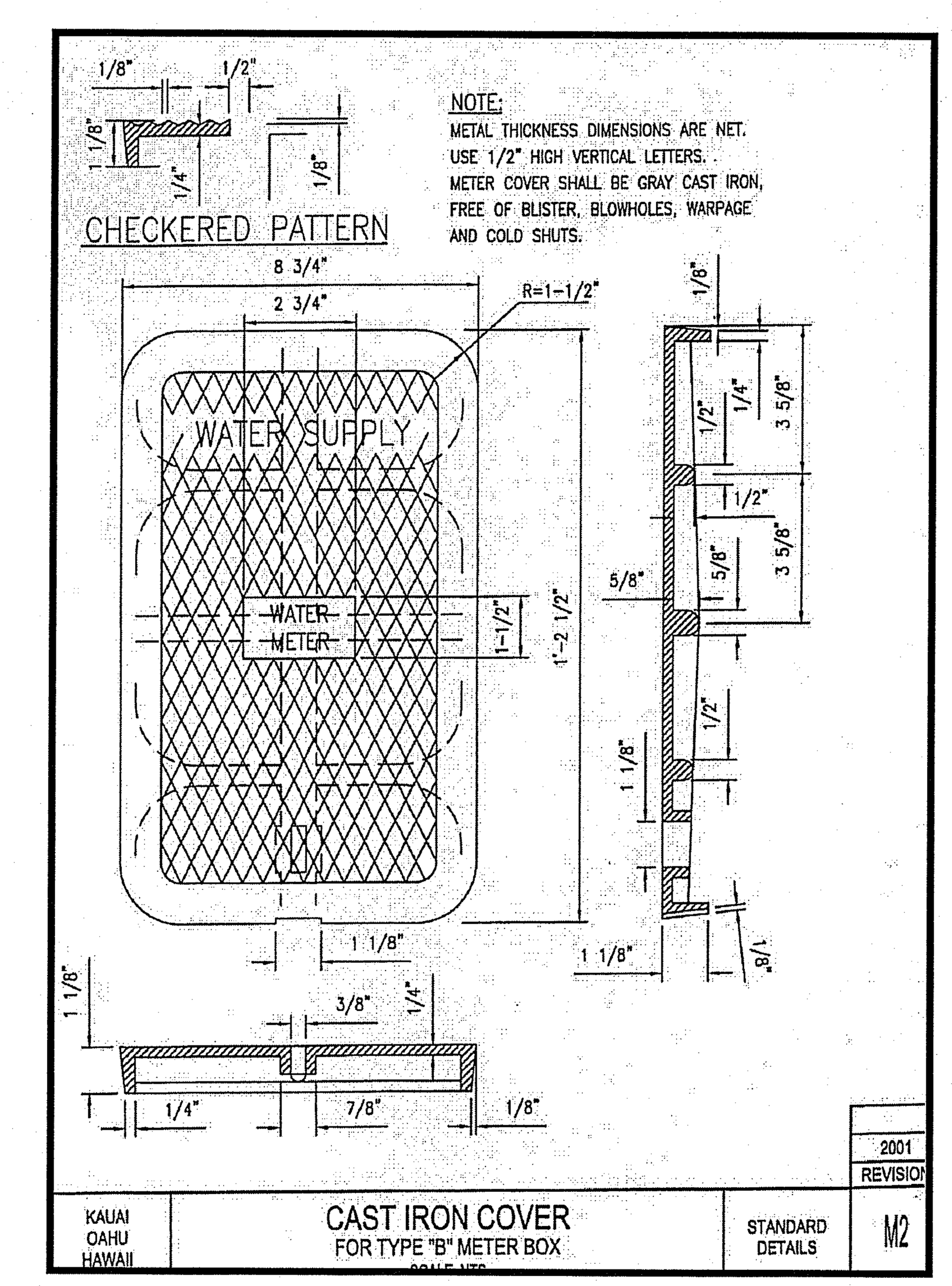

5 / C–3 CAST IRON COVER FOR TYPE "B" METER BOX
NOT TO SCALE

REVISIONS

No.	DATE	DWG.	CHK.
△			
△			
△			

PRINTS TO — DATE

This work was prepared by me or under my supervision and construction of this project will be under my observation.
Exp. 04–30–16

Wesley R. Segawa & Associates, Inc.

DENNIS K. W. LEE — LICENSED PROFESSIONAL ENGINEER — No. 4004–C — HAWAII, U.S.A.

Wesley R. Segawa and Associates, Inc.
Committed to Quality Performance & Value
Civil & Structural Engineers
101 Silva Street, Suite 201 Hilo, Hawaii 96720-4755
Telephone: (808) 935-4677 Fax: (808) 935-2070

Project Title: KEAUKAHA TRACT 1 IMPROVEMENTS LOTS 279-A & 279-B

Sheet Title: WATER NOTES & DETAILS

DESIGN BY: DRB
DRAWN BY: DRB
CHECKED BY: DL
APPROVED BY: DL
DATE: SEPT. 2015
SCALE: AS NOTED
FILE No. W1302.47

DRAWING No. C-3

SHEET No. 4 OF 9 SHTS.

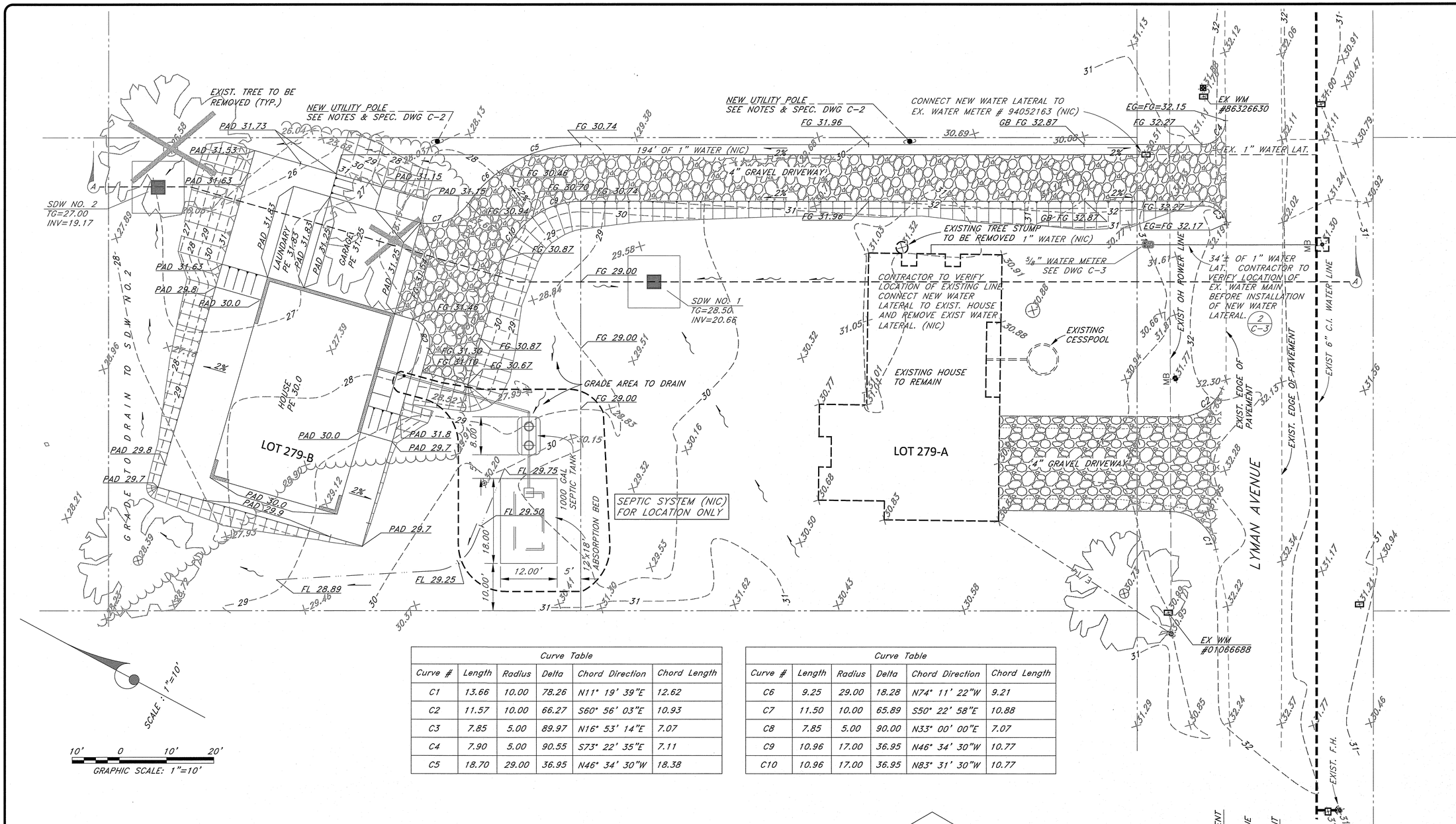

Curve Table					
Curve #	Length	Radius	Delta	Chord Direction	Chord Length
C1	13.66	10.00	78.26	N11° 19' 39"E	12.62
C2	11.57	10.00	66.27	S60° 56' 03"E	10.93
C3	7.85	5.00	89.97	N16° 53' 14"E	7.07
C4	7.90	5.00	90.55	S73° 22' 35"E	7.11
C5	18.70	29.00	36.95	N46° 34' 30"W	18.38

Curve Table					
Curve #	Length	Radius	Delta	Chord Direction	Chord Length
C6	9.25	29.00	18.28	N74° 11' 22"W	9.21
C7	11.50	10.00	65.89	S50° 22' 58"E	10.88
C8	7.85	5.00	90.00	N33° 00' 00"E	7.07
C9	10.96	17.00	36.95	N46° 34' 30"W	10.77
C10	10.96	17.00	36.95	N83° 31' 30"W	10.77

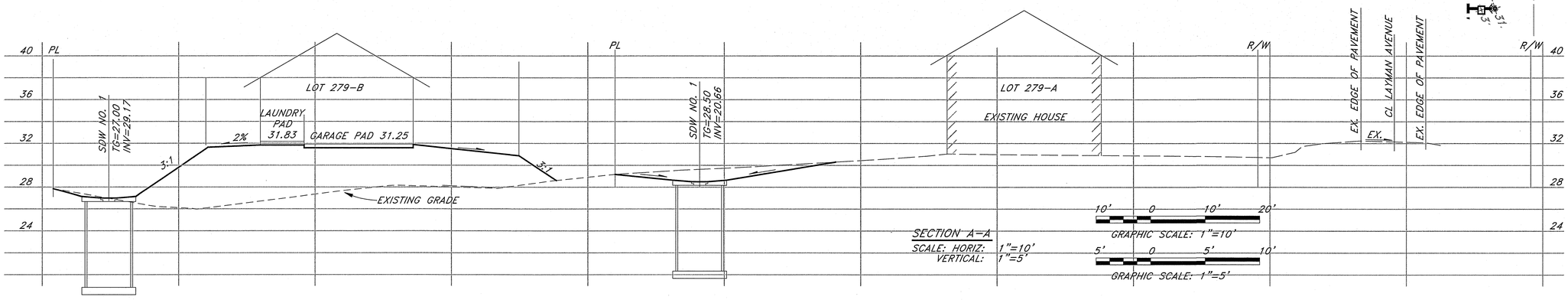

No.	DATE	DWG. CHK.	REVISIONS

PRINTS TO

DATE

This work was prepared by me or under my supervision and construction of this project will be under my observation
Exp. 04-30-16

Wesley R. Segawa & Associates, Inc.

DENNIS K.W. LEE LICENSED PROFESSIONAL ENGINEER No. 4004-C HAWAII

Wesley R. Segawa and Associates, Inc.
Committed to Quality Performance & Value
Civil & Structural Engineers
101 Silva Street, Suite 201 Hilo, Hawaii 96720-4755
Telephone: (808) 935-4677 Fax: (808) 935-2070

Project Title: KEAUKAHA TRACT 1 IMPROVEMENTS LOTS 279-A & 279-B

Sheet Title: GRADING AND DRAINAGE PLAN

DESIGN BY:	DRB
DRAWN BY:	DRB
CHECKED BY:	DL
APPROVED BY:	DL
DATE:	SEPT. 2015
SCALE:	AS NOTED
FILE No.	W1302.47

DRAWING No. C-4

SHEET No. 5 OF 9 SHTS.

EXIST. TREE TO BE REMOVED (TYP.)

NEW UTILITY POLE SEE NOTES & SPEC. DWG C-2

NEW UTILITY POLE SEE NOTES & SPEC. DWG C-2

CONNECT NEW WATER LATERAL TO EX. WATER METER # 94052163 (NIC)

EX WM #86326630

194' OF 1" WATER (NIC)

EX. 1" WATER LAT.

SDW NO. 2
TG=27.00
INV=19.17

SDW NO. 1
TG=28.50
INV=20.66

1" WATER (NIC)

5/8" WATER METER SEE DWG C-3

34'± OF 1" WATER LAT. CONTRACTOR TO VERIFY LOCATION OF EX. WATER MAIN BEFORE INSTALLATION OF NEW WATER LATERAL. (2/C-3)

CONTRACTOR TO VERIFY LOCATION OF EXISTING LINE CONNECT NEW WATER LATERAL TO EXIST. HOUSE AND REMOVE EXIST WATER LATERAL. (NIC)

EXISTING CESSPOOL

EXISTING HOUSE TO REMAIN

EXIST OH POWER LINE

EXIST 6" C.I. WATER LINE

LOT 279-B

LOT 279-A

1000 GAL SEPTIC TANK

ABSORPTION BED

SEPTIC SYSTEM (NIC) FOR LOCATION ONLY

LYMAN AVENUE

EX WM #01066688

EXIST. F.H.

SCALE: 1"=10'

10' 0 10' 20'

GRAPHIC SCALE: 1"=10'

No.	DATE	DWG.	CHK.	REVISIONS
1				
2				
3				

PRINTS TO

DATE

This work was prepared by me or under my supervision and construction of this project. Lic. Exp. 04-30-16

Wesley R. Segawa & Associates, Inc.

DENNIS K.W. LEE LICENSED PROFESSIONAL ENGINEER No. 4004-C USA HAWAII

WRSA
Wesley R. Segawa and Associates, Inc.
Committed to Quality Performance & Value
Civil & Structural Engineers
101 Silva Street, Suite 201 Hilo, Hawaii 96720-4755
Telephone: (808) 935-4677 Fax: (808) 935-2070

Project Title: KEAUKAHA TRACT 1 IMPROVEMENTS LOTS 279-A & 279-B

Sheet Title: UTILITY PLAN

DESIGN BY:	DRB
DRAWN BY:	DRB
CHECKED BY:	DL
APPROVED BY:	DL
DATE:	SEPT. 2015
SCALE:	AS NOTED
FILE No.	W1302.47

DRAWING No. C-5

SHEET No. 6 OF 9 SHTS.

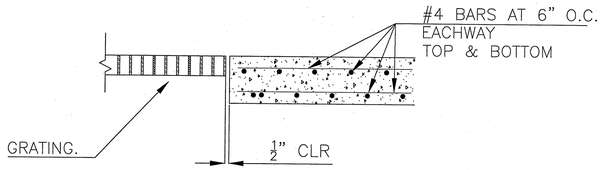

SECTION A–A
NOT TO SCALE

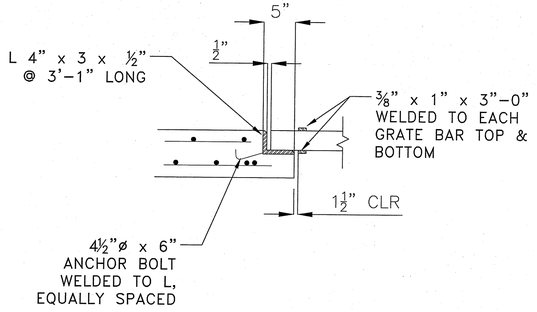

SECTION B–B
NOT TO SCALE

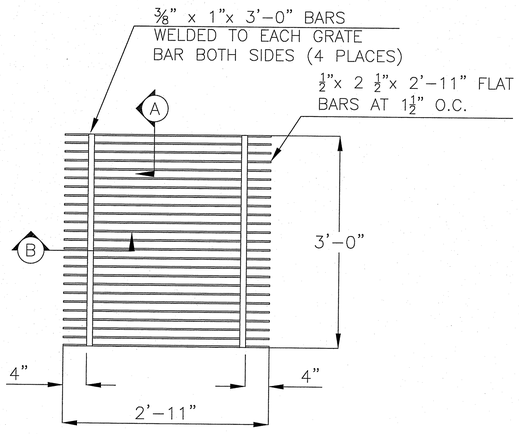

GRATING
NOT TO SCALE

A C-6 DRYWELL GRATE DETAIL
NOT TO SCALE

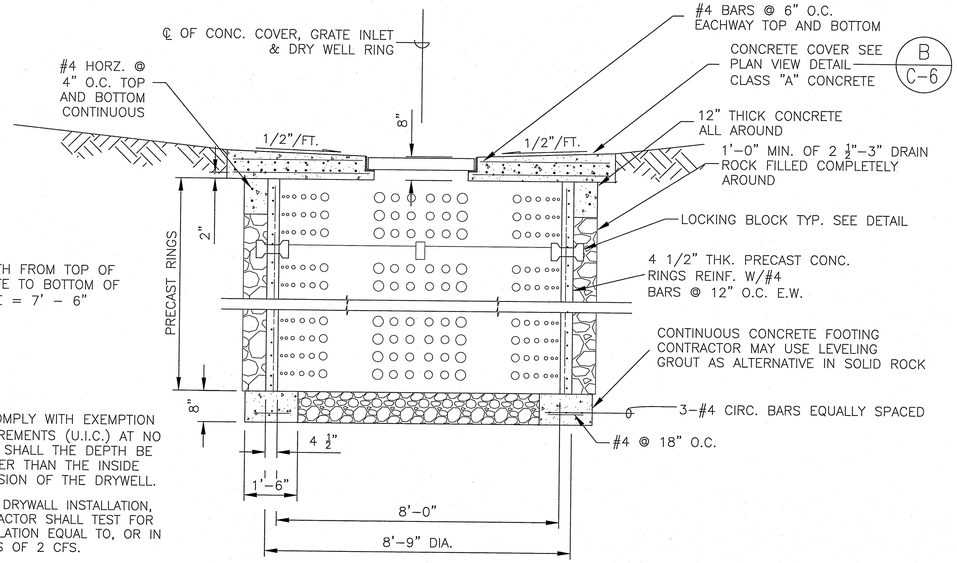

DEPTH FROM TOP OF GRATE TO BOTTOM OF HOLE = 7' – 6"

NOTES:

1. TO COMPLY WITH EXEMPTION REQUIREMENTS (U.I.C.) AT NO POINT SHALL THE DEPTH BE GREATER THAN THE INSIDE DIMENSION OF THE DRYWELL.
2. AFTER DRYWALL INSTALLATION, CONTRACTOR SHALL TEST FOR PERCOLATION EQUAL TO, OR IN EXCESS OF 2 CFS.

CONCRETE RING DRYWELL
NOT TO SCALE

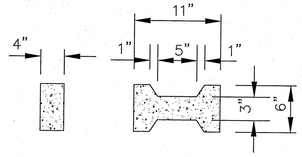

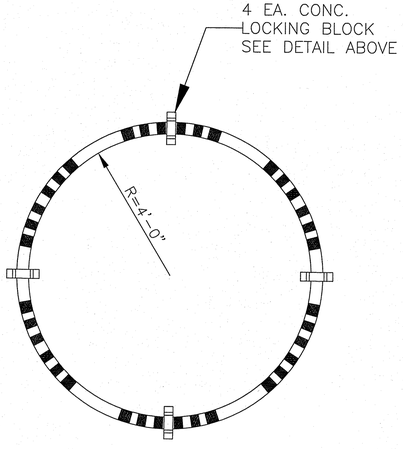

TYPICAL RING CROSS SECTION
NOT TO SCALE

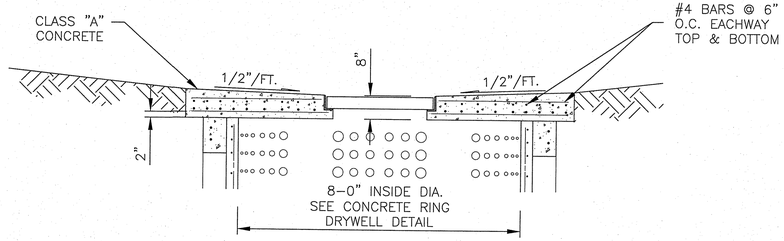

SECTION A–A
NOT TO SCALE

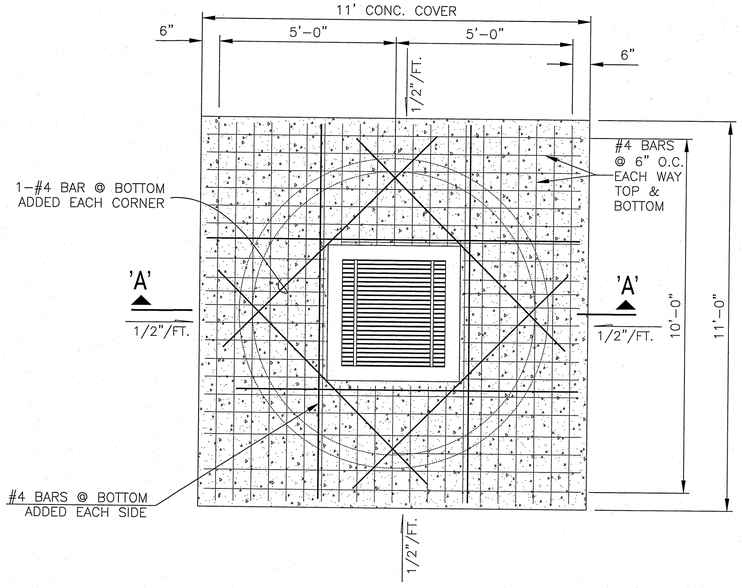

PLAN
NOT TO SCALE

B C-6 CONCRETE DRYWELL DETAIL
NOT TO SCALE

No.	DATE	DWG.	CHK.	REVISIONS
△				
△				
△				

DATE | PRINTS TO

This work was prepared by me or under my supervision and construction of this project will be under my observation. Exp. 04-30-16

Wesley R. Segawa & Associates, Inc.

DENNIS K. W. LEE
LICENSED PROFESSIONAL ENGINEER
No. 4004-C
HAWAII U.S.A.

WRSA
Wesley R. Segawa and Associates, Inc.
Committed to Quality Performance & Value
Civil & Structural Engineers
101 Silva Street, Suite 201 Hilo, Hawaii 96720-4755
Telephone: (808) 935-4677 Fax: (808) 935-2070

Project Title: KEAUKAHA TRACT 1 IMPROVEMENTS
LOTS 279-A & 279-B

Sheet Title: SHALLOW DRYWELL DETAILS

DESIGN BY:	DRB
DRAWN BY:	DRB
CHECKED BY:	DL
APPROVED BY:	DL
DATE:	SEPT. 2015
SCALE:	AS NOTED
FILE No.	W1302.47

DRAWING No. C-6

SHEET No. 7 OF 9 SHTS.

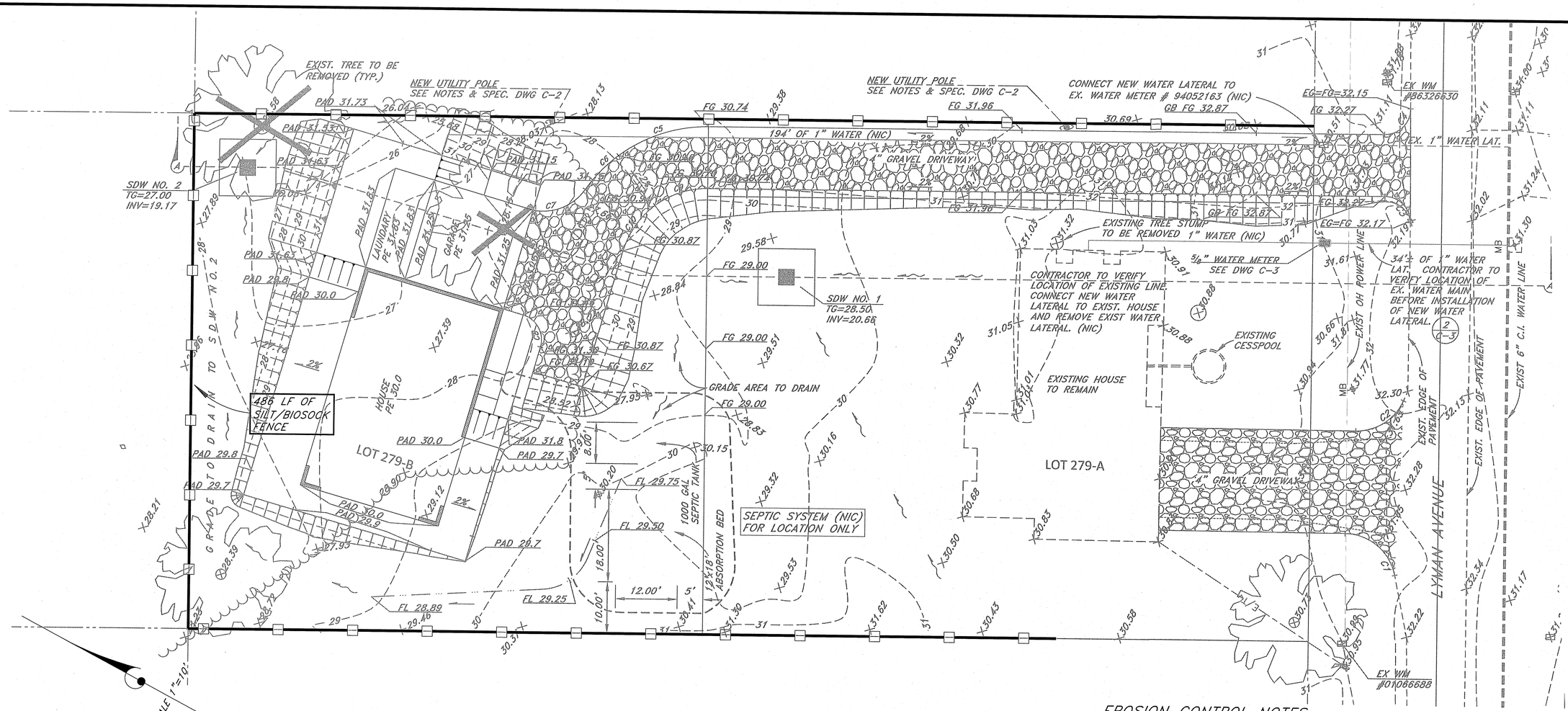

10' 0 10' 20'

GRAPHIC SCALE: 1"=10'

LEGEND:

SILT FENCE/BIOSOCK

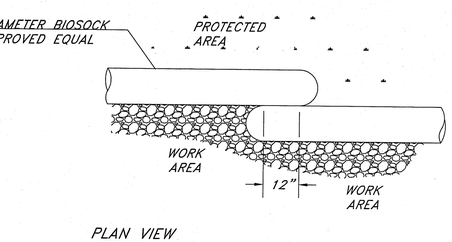

PLAN VIEW

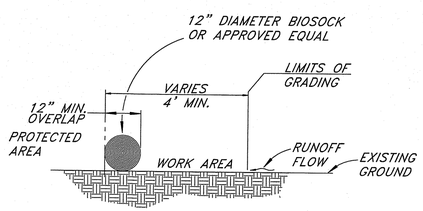

ELEVATION VIEW

BIOSOCK DETAIL (12" DIA)

NOT TO SCALE

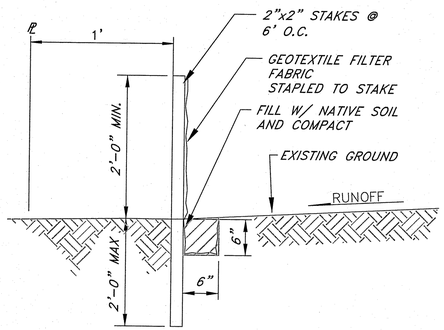

SILT FENCE NOTES:

BIOSOCK MAYBE USED IN LIEU OF SILT FENCE.

THE CONTRACTOR SHALL INSTALL SILT FENCES OR BIO-SOCK PRIOR TO CONSTRUCTION.

ALL BEST MANAGEMENT PRACTICES (BMP'S) SHALL NOT BE REMOVED UNTIL ALL PERMANENT EROSION CONTROL MEASURES ARE IN PLACE AND ESTABLISHED.

AT THE END OF GRADING OPERATIONS, EXISTING CB'S AND DMH'S SURROUNDING THE PROJECT SITE SHALL BE INSPECTED AND ANY ACCUMULATED SEDIMENT AND DEBRIS FOUND IN THE DRAIN STRUCTURES SHALL BE REMOVED. FLUSHING INTO THE CB'S AND DMH'S ARE PROHIBITED.

SILT FENCE DETAIL

NO SCALE

EROSION CONTROL NOTES:

1. THE CONTRACTOR SHALL REFER TO THE RULES RELATING TO SOILS EROSION STANDARDS AND GUIDELINES, APRIL 1999, BY THE CITY AND COUNTY OF HONOLULU DEPARTMENT OF PLANNING AND PERMITTING FOR BEST MANAGEMENT PRACTICES.
2. THE CONTRACTOR SHALL STABILIZE THE CONSTRUCTION SITE AT ALL POINTS OF EGRESS AND INGRESS WITH A 12' WIDE X 20' LONG X 8" DEEP SECTION OF NO. 2 CRUSHED ROCK.
3. STOCKPILES SHALL NOT BE LOCATED IN DRAINAGE WAYS OR OTHER AREAS OF CONCENTRATED FLOWS. SEDIMENT TRAPPING DEVICES SUCH AS FENCES, TRAPS, BASINS OR BARRIERS SHALL BE USED AROUND THE BASE OF ALL STOCKPILES.
4. DUST CONTROL SHOULD BE APPLIED TO REDUCE DUST EMISSIONS. THE CONTRACTOR, AT THEIR OWN EXPENSE, SHALL KEEP THE PROJECT AREA AND SURROUNDING AREA FREE FROM DUST NUISANCE. THE WORK SHALL BE IN CONFORMANCE WITH THE AIR POLLUTION CONTROL STANDARDS CONTAINED IN HAWAII ADMINISTRATIVE RULES: CHAPTER 11-60, "AIR POLLUTION CONTROL".
5. SURFACE FLOW FROM ABOVE AN EXPOSED SLOPE SHALL NOT BE ALLOWED TO FLOW OVER THE SLOPE WITHOUT PROTECTION. SLOPE PROTECTION SHALL BE USED ON AREAS WITH SLOPES GREATER THAN 50% AND ON AREAS OF MODERATE SLOPES THAT ARE PRIME TO EROSION.
6. ALL STORM DRAIN INLETS ON SITE, AND THOSE OFFSITE WHICH MAY RECEIVE RUNOFF FROM THE SITE SHALL USE AN INLET PROTECTION DEVICE.
7. TEMPORARY STABILIZATION IS NOT REQUIRED WHEN THE DISTURBED AREA WILL BE WORKED WITHIN A 14 DAY PERIOD. STABILIZATION IS REQUIRED FOR DISTURBED AREAS AT FINAL GRADE AND FOR THOSE AREAS THAT WILL NOT BE WORKED WITHIN A 14 DAY PERIOD.
8. ALL DISTURBED AREAS SHALL BE PERMANENTLY STABILIZED PRIOR TO REMOVING EROSION AND SEDIMENT MEASURES. ALL TEMPORARY EROSION AND SEDIMENT CONTROL MEASURES SHALL BE REMOVED WITHIN 30 DAYS AFTER FINAL SITE STABILIZATION OR AFTER THE TEMPORARY MEASURES ARE NO LONGER NEEDED. TRAPPED SEDIMENT AND AREAS OF DISTURBED SOIL WHICH RESULT FROM THE REMOVAL OF THE TEMPORARY MEASURES SHALL BE IMMEDIATELY PERMANENTLY STABILIZED.

No.	DATE	DWG. CHK.	REVISIONS

PRINTS TO DATE

This work was prepared by me or under my supervision and construction of this project will be under my observation.
Exp. 04-30-16
Wesley R. Segawa & Associates, Inc.

DENNIS K.W. LEE LICENSED PROFESSIONAL ENGINEER No. 4004-C HAWAII U.S.A.

WRSA
Wesley R. Segawa and Associates, Inc.
Civil & Structural Engineers
Committed to Quality Performance & Value
101 Silva Street, Suite 201 Hilo, Hawaii 96720-4755
Telephone: (808) 935-4677 Fax: (808) 935-2070

Project Title: KEAUKAHA TRACT 1 IMPROVEMENTS LOTS 279-A & 279-B

Sheet Title: EROSION CONTROL (BMP) PLAN

DESIGN BY:	DRB
DRAWN BY:	DRB
CHECKED BY:	DL
APPROVED BY:	DL
DATE:	SEPT. 2015
SCALE:	AS NOTED
FILE No.	W1302.47

DRAWING No. C-7

SHEET No. 8 OF 9 SHTS.

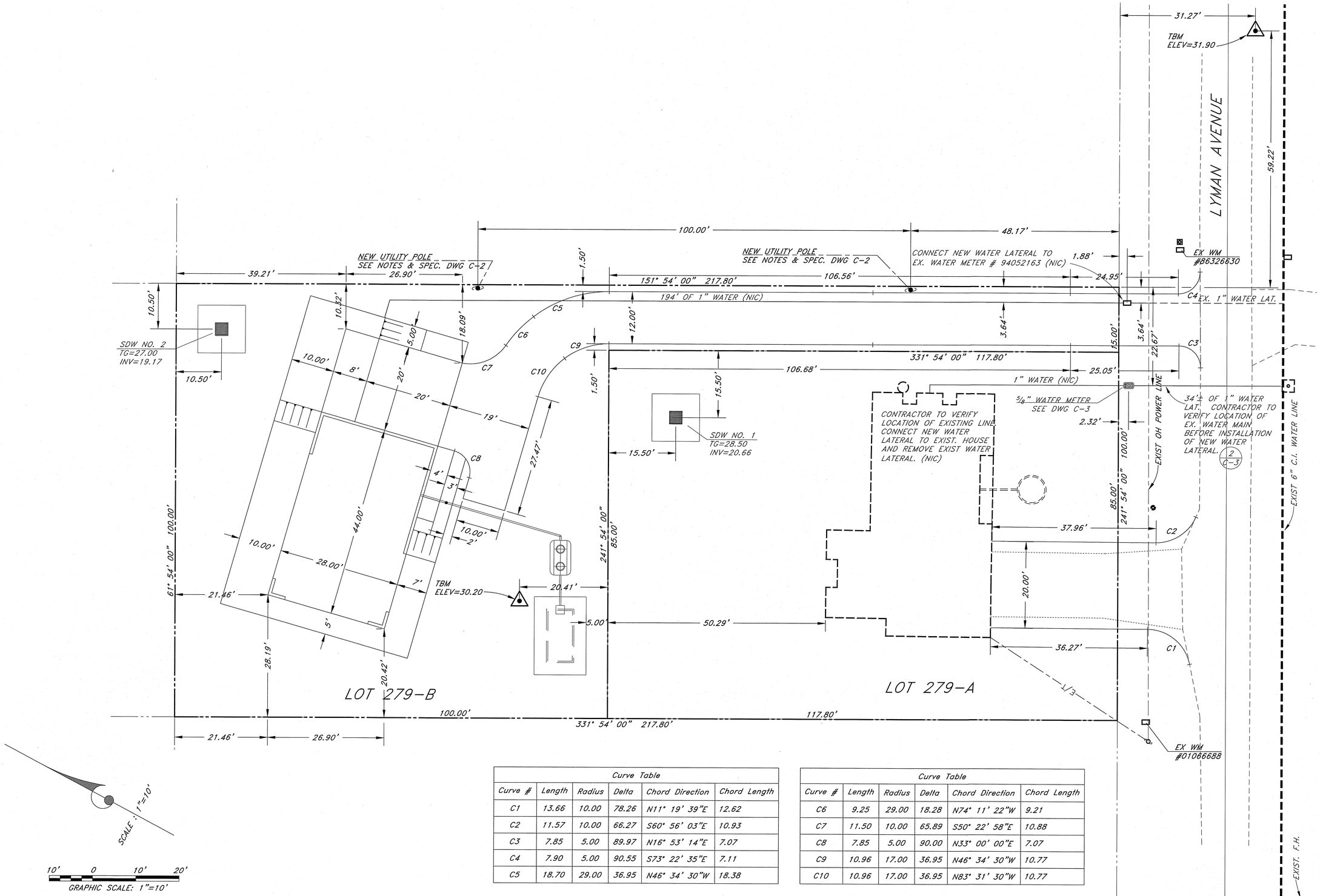

Curve Table					
Curve #	Length	Radius	Delta	Chord Direction	Chord Length
C1	13.66	10.00	78.26	N11° 19' 39"E	12.62
C2	11.57	10.00	66.27	S60° 56' 03"E	10.93
C3	7.85	5.00	89.97	N16° 53' 14"E	7.07
C4	7.90	5.00	90.55	S73° 22' 35"E	7.11
C5	18.70	29.00	36.95	N46° 34' 30"W	18.38

Curve Table					
Curve #	Length	Radius	Delta	Chord Direction	Chord Length
C6	9.25	29.00	18.28	N74° 11' 22"W	9.21
C7	11.50	10.00	65.89	S50° 22' 58"E	10.88
C8	7.85	5.00	90.00	N33° 00' 00"E	7.07
C9	10.96	17.00	36.95	N46° 34' 30"W	10.77
C10	10.96	17.00	36.95	N83° 31' 30"W	10.77

No.	DATE	DWG.	CHK.	REVISIONS

PRINTS TO

DATE

This work was prepared by me or under my supervision and construction of this project will be under my observation. Exp. 04-30-16

Wesley R. Segawa & Associates, Inc.

DENNIS K. W. LEE LICENSED PROFESSIONAL ENGINEER No. 4004-C HAWAII U.S.A.

WRSA
Wesley R. Segawa and Associates, Inc.
Committed to Quality Performance & Value
Civil & Structural Engineers
101 Silva Street, Suite 201 Hilo, Hawaii 96720-4755
Telephone: (808) 935-4677 Fax: (808) 935-2070

Project Title: KEAUKAHA TRACT 1 IMPROVEMENTS

Sheet Title: LOTS 279-A & 279-B DIMENSION PLAN

DESIGN BY: DRB
DRAWN BY: DRB
CHECKED BY: DL
APPROVED BY: DL
DATE: SEPT. 2015
SCALE: AS NOTED
FILE No. W1302.47

DRAWING No. C-8

SHEET No. 9 OF 9 SHTS.

STATE OF HAWAII

DEPARTMENT OF HAWAIIAN HOME LANDS
91-5420 Kapolei Parkway,
Kapolei, HI. 96707

APPENDIX

FOR

FURNISHING LABOR AND MATERIALS FOR

Scattered Lot Improvements for

Five Keaukaha Lots in Tract 1

WAIAKEA, SOUTH HILO, ISLAND OF HAWAII, STATE OF HAWAII,

IFB No.: IFB-16-HHL-014

APRIL 2016

DHHL REQUIRED SUBMITTALS (State of Hawaii / SOH)

#	SUBMITTAL	FORM	MUST BE SUBMITTED	REFERENCE
1	**SUBMITTALS REQUIRED PRIOR TO BID**			
	Intent to Bid	DHHL Form	10 Calendar Days before Bid	GC 2.1.1
	Statement of Bidder's Construction Experience	DHHL Form	10 Calendar Days before Bid	
	Substitution of Materials/Equipment	Letter	14 days prior to bid opening	
2	**ITEMS REQUIRED WITH BID**			
	Form of Bid	DHHL Form	With Bid	Included with construction documents
	Surety Bid Bond (5% of Bid Amount)	SOH Form	With Bid	GC 2.9
	Corporate Resolution	Company Standard	With Bid	Must be notarized
	List of General & Subcontractors	DHHL Form	With Bid	Included with construction documents
	Prime Certification of Subcontractor's Eligibility	DHHL Form	With Bid	Included with construction documents
3	**SUBMITTALS REQUIRED BY LOW BIDDER**	N/A	N/A	
4	**SUBMITTALS REQUIRED AT AWARD**			
	Contract Agreement	SOH Form	Contract	
	Non-Collusive Affidavit/Non-Identity of Interest Affidavit	DHHL Form	With Contract	
	Labor and Material Bond	SOH Form	With Contract	
	Performance and Payment Bond	SOH Form	With Contract	
	Surety Acknowledgement	SOH Form	With Contract	
	Contractor Acknowledgement	SOH Form	With Contract	Requires corporate resolution
	Certificate of Insurance	Standard Form	With Contract	GC 7.3
5	**SUBMITTALS REQUIRED AFTER AWARD**			
	Schedule of Submittals		10 Calendar Days after NTP	
	Material & Equipment Delivery Schedule		20 Calendar Days after Award	GR 3.03
	Construction Progress Schedule		15 Calendar Days after NTP	GR 10
	Schedule of Values	DHHL Form 51000	15 Calendar days from NTP	G.R. 11; G.C. 7.2.4
	List of Suppliers			GC 6.2
6	**SUBMITTALS REQUIRED PRIOR TO START OF CONSTRUCTION**			
	Emergency Contact List		10 days after NTP	G.R. 20
	List of Supervisory Personnel & Employees		10 days after NTP	
	Safety Plan		10 days after NTP	GC 7.16
	Permits		10 days after NTP	All required permits

#	SUBMITTAL	FORM	MUST BE SUBMITTED	REFERENCE
7	**SUBMITTALS REQUIRED ON SPECIFIC OCCASSIONS**			
	Schedule of Submittals Update		Monthly with Pay Request	
	Construction Progress Schedule Update		Monthly with Pay Request	
	Contractor's Certification of Payment		Monthly with Pay Request	
	Geotechnical Engineer Reports		Within 24 hrs. of completion	G.R. 13
	Construction Progress Meeting Minutes		24 hours after meeting	GR 25
	Archaeological Site Notification		Immediate notification	G.R. 15; G.C. 7.18
	Overtime/Holiday/Weekend Notification		2 working days in advance	
	Contractor's Certified Payrolls		Weekly	GC 7.9
	Subcontractors' Certified Payrolls		Weekly	GC 7.9
8	**SUBMITTALS REQUIRED AT COMPLETION**			
	Final Payroll Records			GC 7.9
	Warranty of Clear Title			GC 8.7
	Final Payment			GC 8.8
	Certification of Compliance for Final Payment	SOH Form-22		
	Substantial Completion Notification		When achieved	GC 7.31
	Notice of Final Inspection			GC 7.31
	Certificate of Insurance	Standard Form		
	Non-Gratuity Affidavit			
	Certificate of Release - all subcontractors			
	Certificate of Release - Surety			
	Certificate of Occupancy for Building			Formal local government approval
	END OF SECTION			

SUBSTITUTION REQUEST[1]

DATE_____

Project Manager
Department of Hawaiian Home Lands
91-5420 Kapolei Parkway,
Kapolei, Hawaii 96707

SUBJECT: SUBSTITUTION REQUEST

PROJECT TITLE: _____

IFB NO: _____

In accordance with the requirements of the DHHL GENERAL CONDITIONS, enclosed[2] are three (3) sets of technical brochures and statement of variances for your review and approval for the item(s) shown below.

SECTION/ ITEM	SPECIFIED BRAND	SUBSTITUTE OR ALTERNATE BRAND	VARIANT[3] FEATURES

[I/Company certify/certifies][4] that the substitution request of the above item(s) has no other variant features.

_____
COMPANY

_____
SIGNATURE DATE

_____
ITS

NOTE:
1. Use own letterhead
2. Submit one (1) original and two (2) copies
3. If no variant features indicate “None”
4. Fill in appropriate entity

CERTIFICATION OF RECYCLED CONTENT

Solicitation No.:

Title:

Issuance Date:

Opening Date:

Item No.	Product Name	Product Description	Manufacturer	Post-Consumer Recovered Material Content*	Recovered Material Content*

*Post-consumer recovered material and recovered material content, as defined in section 3-124-21, HAR, measured as percentage of total product weight. Attach manufacturer's specifications or certification, as required by section 3-124-24(d), HAR. Recycled content measurements to be used for bid evaluation. If more space is required for product information, additional sheets may be attached.

I DECLARE THAT THE RECYCLED CONTENT HAS BEEN EXAMINED BY ME AND IS TO THE BEST OF MY KNOWLEDGE AND BELIEF, TRUE AND CORRECT.

Authorized Representative

Company:

Name:

Name:

Title:

Address:

Signature:

Telephone:

Date:

CONTRACTOR'S LICENSING REQUIREMENTS

The Bidder is reminded that due to the Hawaii Supreme Court's January 28, 2002 decision in Okada Trucking Co., Ltd. v. Board of Water Supply, et al., 97 Haw. 450 (2002), the Bidder with "A" general engineering contractors or "B" general building contractor is prohibited from undertaking any work, solely or as part of a larger project, that would require the general contractor to act as a specialty contractor in any area in which the general contractor has no license. Although the "A" or "B" contractor may still bid on and act as the "prime" contractor on an "A" or "B" project, respectively, the "A" and "B" contractor may only perform work in the areas in which they have the appropriate "C" specialty contractor's license. The remaining work must be subcontracted out to appropriately licensed "C" specialty contractors.

Bidders must possess a valid State of Hawaii "B" contractor license.

The following is a list of the contractor's licenses that HPHA anticipates is required to complete this particular project; however, this list is not exclusive and additional licenses may be required. **It is the sole responsibility of the contractor to review the requirements of this project and determine the appropriate additional licenses that are required to complete the project.**

(THE CONTRACTOR SHALL PROVIDE THE REQUIRED CONTRACTOR AND SUBCONTRACTOR LICENSES) i.e.

C-3 Asphalt paving and surfacing
C-17 Excavating, grading and trenching

LISTING OF GENERAL AND SUBCONTRACTORS

The following shall be attached to and be considered a part of the bid:

Each bidder shall list the names of each person or firm to be engaged by the bidder on the project as prime contractor or subcontractor covered under Chapter 444, Hawaii Revised Statutes (HRS), and shall also indicate the nature and scope of work to be performed by such contractors pursuant to Section 103D-302 (HRS). This list shall not be added to or altered without the written consent of the State. Failure to comply with the above may be sufficient cause for rejection of the bid. Write "NONE" if no subcontractors will be used on this project.

	SCOPE OF WORK	**NAME OF CONTRACTOR & RME**	**LIC. NO.**
C-1	ACOUSTICAL & INSULATION		
C-2	MECHANICAL INSULATION		
C-3	ASPHALT PAVING AND SURFACING		
C-3a	ASPHALT CONCRETE PATCHING, SEALING, AND STRIPING		
C-3	PLAY COURT SURFACING		
C-4	BOILER, HOT WATER HEATING, AND STEAM FITTING		
C-5	CABINET, MILLWORK, AND CARPENTRY REMODELING AND REPAIRS		
C-5a	GARAGE DOOR AND WINDOW SHUTTERS		
C-5b	SIDING APPLICATION		
C-6	CARPENTRY FRAMING		
C-7	CARPET LAYING		
C-9	CESSPOOL		
C-12	DRYWALL		
C-13	ELECTRICAL		
C-14	SIGN		
C-15	ELECTRONIC SYSTEMS		
C-15a	FIRE AND BURGLAR ALARM		
C-16a	CONVEYOR SYSTEM		

	SCOPE OF WORK	NAME OF CONTRACTOR & RME	LIC. NO.
C-16	ELEVATOR		
C-17	EXCAVATING, GRADING AND TRENCHING		
C-19	ASBESTOS		
C-20	FIRE PROTECTION		
C-20a	FIRE REPRESSANT SYSTEMS (DRY CHEMICAL)		
C-21	FLOOR COVERING		
C-22	GLAZING AND TINTING		
C-22a	GLASS TINTING		
C-23	GUNITE (Air Blown Motar)		
C-24	BUILDING MOVING AND WRECKING		
C-25	INSTITUTIONAL AND COMMERCIAL EQUIPMENT		
C-27	LANDSCAPING		
C-27a	HYDRO MULCHING		
C-27b	TREE TRIMMING AND REMOVAL		
C-31	MASONRY		
C-31a	CEMENT CONCRETE		
C-31b	STONE MASONRY		
C-31c	REFRACTORY		
C-31d	TUCKPOINTING AND CAULKING		
C-31e	CONCRETE CUTTING, DRILLING, SAWING, CORING AND PRESSURE GROUTING		
C-32	ORNAMENTAL, GUARDRAIL, AND FENCING		
C-33	PAINTING AND DECORATING		
C-33a	WALL COVERINGS		

	SCOPE OF WORK	NAME OF CONTRACTOR & RME	LIC. NO.
C-33b	TAPING		
C-33c	SURFACE TREATMENT		
C-34	SOIL STABILIZATION		
C-35	PILE DRIVING, PILE AND CAISSON DRILLING, AND FOUNDATION		
C-36	PLASTERING		
C-36a	LATHING		
C-37	PLUMBING		
C-37a	SEWER AND DRAIN LINE		
C-37b	IRRIGATION AND LAWN SPRINKLER SYSTEMS		
C-37c	VACUUM AND AIR SYSTEMS		
C-37d	WATER CHLORINATION AND SANITATION		
C-37e	TREATMENT AND PUMPING FACILITIES		
C-37f	FUEL DISPENSING		
C-38	POST TENSIONING		
C-40	REFRIGERATION		
C-40a	PREFABRICATED REFRIGERATOR PANELS		
C-41	REINFORCING STEEL		
C-42	ROOFING		
C-42a	ALUMINUM AND OTHER METAL SHINGLES		
C-42b	WOOD SHINGLES AND SHAKES		
C-42c	CEMENT AND CLAY TILE		
C-42d	COMPOSITION SHINGLE		
C-42e	URETHANE FOAM		

	SCOPE OF WORK	NAME OF CONTRACTOR & RME	LIC. NO.
C-42f	LIQUID ASPHALT ROOFING		
C-42g	ROOF COATING		
C-43	SEWER, SEWAGE DISPOSAL, DRAIN, & PIPE LAYING		
C-43a	RECONDITIONING AND REPAIRING PIPELINE		
C-44	SHEET METAL		
C-44a	GUTTERS		
C-44b	AWNINGS AND PATIO COVER		
C-48	STRUCTURAL STEEL		
C-48a	STEEL DOOR		
C-51	TILE (CERAMIC & MOSAIC)		
C-51a	CULTURED MARBLE		
C-51b	TERRAZZO Table		
C-52	VENTILATING AND AIR CONDITIONING		
C-55	WATERPROOFING		
C-56	WELDING		
C-57	WELL DRILLING		
C-57a	PUMPS INSTALLATION		
C-57b	INJECTION WELL		
C-61	SOLAR POWER SYSTEMS		
C-61a	SOLAR HOT ENERGY SYSTEMS		
C-61b	SOLAR HEATING & COOLING SYSTEMS		
C-62	POLE AND LINE		
C-62a	POLE		

	SCOPE OF WORK	NAME OF CONTRACTOR & RME	LIC. NO.
C-63	HIGH VOLTAGE ELECTRICAL		
C-68hd	HORIZONTAL DRILLING & MICRO-TUNNELING		
C-68rl	ROCK FALL MITIGATION		
C-68	CLASSIFIED SPECIALIST (SPECIFY)		

OFFICIAL ADDRESS:

_____

_____

_____

CONTRACTOR'S LICENSE NO.:

_____

FIRM NAME _____

BY: _____

TITLE: _____

DATE: _____, 20_____

FEDERAL CONTRACTOR (RS) ID NO.:

_____

STATE OF HAWAII
DEPARTMENT OF HAWAIIAN HOME LANS
CHANGE OF SUBCONTRACTOR REQUEST

DATE

PROJECT TILE:	PROJECT NO.:	CONTRACT NO.:

REQUESST BY GENERAL CONTRACTOR

NAME:

REPRESENTING:

ADDRESS:

PHONE NUMBER:	FAX NUMBER:	LICENCE NUMBER:

SUBCONTRACTOR/CONTRACTOR TO BE REPLACED

NAME	CATEGORY OF WORK
REPRESENTING:	MBE □ YES □ NO
ADDRESS:	WBE □ YES □ NO
	SUBCONTRACT AMOUNT: $

PHONE NUMBER:	FAX NUMBER:	LICENCE NUMBER:

REASON FOR CHANGE (select one of the following)

□ Subcontractor will not perform the work as specified.
Explanation:

□ Attached is a letter from the Subcontractor/Contractor requesting release from work on this project on his/her letterhead.

□ Attached is documentation showing non-performance or non-responsiveness.

PROPOSED REPLACEMENT SUBCONTRACTOR

NAME	CATEGORY OF WORK
REPRESENTING:	MBE □ YES □ NO
ADDRESS:	WBE □ YES □ NO
	SUBCONTRACT AMOUNT: $

PHONE NUMBER:	FAX NUMBER:	LICENCE NUMBER:

APPROVAL/DENIAL BY OWNER

RECOMMENDATION OF CONTRUCTION REPRESENTATIVE

□ Approval □ Denial Reason:

PRINT NAME	SIGNED	DATE

RECOMMENDATION OF MINORITY CONTRACTORS ADMINISTRATOR (Required for Replacement of MBD/WBE Sub-Contractor)

□ Approval □ Denial Reason:

PRINT NAME	SIGNED	DATE

REQUEST FOR CHANGE FROM SUB-CONTRACTOR TO SUB-CONTRACTOR WITH AN **MBE _____% WBE_____ %** IS:

□ Approval □ Denial Reason:

UNIT MANAGER, PROJECT MANAGEMENT	SIGNED	DATE

PRIME CONTRACTOR CERTIFICATION OF SUBCONTRACTOR ELIGIBILITY

Name of Project: _____

Location: _____

Contract Number_____ DHHL IFB Number _____

This is to certify that the subcontractors and or lower-tier subcontractors listed in the "List of General and Subcontractors" form are all eligible for award of the above captioned project and I have verified their eligibility by reviewing the current GSA List of Parties Excluded from Procurement or Non-procurement Programs.

This certification covers only those subcontractors and or lower-tier subcontractors listed in the "List of General and Subcontractors" form. I understand that a separate certification is required for any subcontractor and or lower-tier subcontractor awarded contracts subsequent to the initial certification. I further understand that should any subcontractor and or lower-tier subcontractor be found ineligible after award of the contract, the Hawaii Public Housing Authority (HPHA) may require the contract be terminated and may refer the matter to the Department of Labor for appropriate action.

Date_____ _____
(Type Name of Prime Contractor)

By: _____
(Signature of Authorized Officer/Owner/ Partner)

_____ (Type
Name and Title of person signing)

CONTRACTOR'S CERTIFICATION OF PAYMENT

I hereby certify, to the best of my knowledge and belief, that:

(1) The amounts requested are only for performance in accordance with the specifications, terms, and conditions of the contract;

(2) Payments to subcontractors and suppliers have been made from previous payments received under the contract, and timely payments will be made from the proceeds of the payment covered by this certification, in accordance with subcontract agreements;

(3) Any money paid to the prime contractor from previous payments have been dispersed to subcontractors and suppliers within ten (10) days after receipt of the money, in accordance with the terms of the subcontract agreements;

(4) This request for progress payments does not include any amounts which the prime contractor intends to withhold or retain from a subcontractor or supplier in accordance with the terms and conditions of the subcontract.

[103-10.5: H.R.S. / §3-125-23 HAR - Prompt Payment of the General Conditions, 8.5]

**** NOTE: This form shall be submitted with each and every payment request.**

Company Name_____

Print Name and Title_____

Signature_____

Date_____ Payment Request No._____

DHHL IFB #_____ Contract #_____

Job Title:_____

VALUE ENGINEERING CHANGE PROPOSAL
(10/14/97)

	VECP NO:	DATE:
["STATE" OR "NAME OF COUNTY"] PROJECT TITLE:	PROJECT NO:	CONTRACT NO:
	CONTRACTOR:	

A. CHANGES:
The following changes are to be performed in accordance with all contract stipulations and covenants (Specifications, drawings, special provisions, etc.):

B. CONTRACTOR'S QUOTATION:
The changes included under Part A above will be performed at a contract price decrease of $_____ in accordance with all terms of the contract documents. Six copies of our cost breakdown are attached herewith. We are aware that this value engineering change proposal must be approved by the _____ in the designated space
["State" or "Name of County"]
below and that no work is to be performed until an approved change order has been given us. In case of rejection of this proposal by the _____, we will
["State" or "Name of County"]
continue all work in accordance with the existing contract terms.

_____ _____
NAME TITLE

_____ _____
SIGNATURE DATE

C. STATEMENT OF FUNDS:

Original Contract Price. . . . . .$_____
Amended Contract Price . . . . . .$_____
New Contingency Balance Remaining. . . . . .$_____

D. SUMMARY DESCRIPTION AND POTENTIAL IMPACTS OF THE PROPOSED CHANGES:

E. TIME EXTENSION:

F. VALIDATION OF CHANGE ORDER
Recommended for approval

CONSTRUCTION ENGINEER

Approved:

PROCUREMENT OFFICER

DISTRIBUTION:

DATE

G. REJECTION OF CHANGE ORDER

CONSTRUCTION ENGINEER

Disapproved:

PROCUREMENT OFFICER

DATE

Reasons for rejection:

VALUE ENGINEERING CHANGE PROPOSAL
(Contractor-Required Information)

From: _____
To: _____ VECP No. _____
Project: _____ Contract No. _____
Location: _____

INFORMATION REQUIRED OF THE CONTRACTOR: (If answer to any of the following questions is "Yes", explain in "REMARKS" below.)

		YES	NO
1.	Does this proposed change affect the time of completion of the contract as stated in the General Clauses?		
2.	Has the Contractor submitted this proposed change previously to this office or any other government agency?		
3.	Does this change affect other costs to the government, such as government-furnished property or costs of contract-related items?		
4.	Does this proposed change increase the maintenance or operation costs of original or proposed items?		
5.	Is a subcontractor involved in this proposed change to the original contract?		
6.	Does the Contractor intend to restrict the government's right to use any data described in this proposed change?		
7.	Does this proposed change involve use of proprietary materials?		

CHANGES AND/OR REVISIONS TO DRAWINGS AND SPECIFICATIONS: (Attach applicable contract drawings and specifications, including Contractor's or shop drawings or literature with all changes marked on the drawings and specifications.)

REMARKS:

Contractor's Representative:

_____
Name Signature Date

Received by: _____
["State" or "Name of County"]

_____
Name Signature Date

VALUE ENGINEERING CHANGE PROPOSAL
(Contractor Summary Submittal)

From: _____ Date: _____
To: _____ VECP No. _____
Project: _____ Contract No. _____
Location: _____

SUMMARY OF CHANGE (Description - Compare advantages and disadvantages, include all information required by the contract clauses and section 3-132-4 for value engineering change proposals)
Before: (sketch, when applicable) After:

ESTIMATED COST SUMMARY: (Costs shall be estimated in accordance with the change provisions contained in the General Clauses of the contract. Attach Cost Estimating Form, for detailed estimate whenever applicable.)

		Qty.	Unit Cost	Totals
A.	Original	____	$_____	$_____
B.	Proposed	____	$_____	$_____
C.	Gross Savings (A-B)			$_____
D.	Contractor's Implementing Cost			$_____
E.	Total Estimated Decrease (C-D)			$_____
F.	State's Implementing Cost		$_____	
G.	Difference (E-F)		$_____	
H.	1/2 Difference ($\frac{E-F}{2}$)			$_____
I.	Reduction in Contract Price (E-H).			$_____

DATE BY WHICH A CHANGE ORDER MUST BE ISSUED SO AS TO OBTAIN MAXIMUM COST REDUCTION . . . . . _____
Date

Contractor's Representative:

_____
Name Signature Date

Received by: _____
["State" or "Name of County"]

_____
Name Signature Date

STATE OF HAWAII
STATE PROCUREMENT OFFICE

CERTIFICATION FOR HAWAII PRODUCT PREFERENCE

1. Legal Name of the company whose product is mined, excavated, produced, manufactured, raised or grown in the state of Hawaii Requester: _____	2. dba: _____ 3. Hawaii General Excise Tax Number:
4. Address	5. Email Address
6. Contact Person	7. Phone

Submit one (1) form for each product.

8. Specify and provide details of the product for which preference is claimed (ie: Milk, white, 2% low fat, 1 gallon, four (4) to a case etc.):

9. Quality Standards met by product (ie. California Milk Standards, ASTM/AHSTO,USDA, etc.) :

10. Product available on: ☐Oahu ☐ Maui ☐ Hawaii ☐ Lanai ☐ Kauai ☐ Molokai

11. Product is certified an agricultural, aquacultural, horticultural, silvicultural, floricultural, or livestock product raised, grown, or harvested in the state of Hawaii.

☐ Yes or ☐ No

12	Definition: "Hawaii Input" is the part of the product cost attributable to production, manufacturing, or other expenses arising within the state of Hawaii. Fill in every line in column s A, B, & C	**A** **Hawaii Input**	**B** **Non- Hawaii input**	**C** **Total A + B**
a	Cost to mine, excavate, produce, manufacture, raise, or grow the materials in the state of Hawaii.	$_____ per unit	$_____ per unit	$_____ per unit
b	The added value of that portion of the cost of imported materials incurred after landing in the state of Hawaii, including but not limited to other articles, materials, and supplies, added to the imported materials.	$_____ per unit	$_____ per unit	$_____ per unit
c	Cost of labor, variable overhead, utilities, and services, incurred in the production and manufacturing of materials or products in the state of Hawaii	$_____ per unit	$_____ per unit	$_____ per unit
d	Fixed overhead cost and amortization or depreciation cost, if any, for buildings, tools, and equipment situated and located in the state of Hawaii used in the production or manufacturing of a product.	$_____ per unit	$_____ per unit	$_____ per unit
e	**Totals**	$_____ per unit (Add Column A)	$_____ per unit (Add Column B)	$_____ per unit (Add Colum C)

13. Percent of Hawaii Input _____ % (12e. Column A Total ÷ Column C Total)

14. Failure to adequately verify, deliver, or supply Hawaii products. A procurement officer who has awarded a contract finds the contractor has failed to comply with HRS §103D-1002, Hawaii products, the contract shall be cancelled and the findings shall be referred for debarment or suspension proceedings under HRS §103D-702. Any purchase made or any contract awarded or executed in violation of this section shall be void and no payment shall be made by any purchasing agency. If debarred, the person or company shall be prohibited from bidding on any state or county government solicitations for up to three (3) years.

Should the procurement officer receiving a protest challenging the validity of the classification of a Hawaii product request an audit of the information of the proper classification of the product as defined under HRS §103D-1002, the cost of the audit shall be paid for by the requester.

In the event of any change that materially alters the offeror's ability to supply the certified Hawaii products, the offeror shall notify in writing the procurement officer within five (5) working days of knowing of the change and the parties shall enter into discussions for the purposes of revising the contract or terminating the contract for convenience.

Information submitted is CONFIDENTIAL or PROPRIETARY DATA, and the procurement officer shall not disclose this form, pursuant to HRS §92F-13(3) on government records; exception's to general rule.

I certify, under penalties set forth in HRS §103D-1002, on Hawaii products, that the information provided herein has been examined by me and to the best of my knowledge and belief is true, correct, complete, and made in good faith pursuant to HRS §103D-101.

Signature of Authorized Representative: _____ Date:_____

Print Name of Authorized Representative:_____ Title:_____

GOVERNMENT USE ONLY

☐ APPROVED ☐ DISAPPROVED

_____ _____

Procurement Officer Signature Government Agency

STATE OF HAWAII

DEPARTMENT OF HAWAIIAN HOME LANDS
91-5420 Kapolei Parkway,
Kapolei, HI. 96707

SAMPLE FORMS

FOR

FURNISHING LABOR AND MATERIALS FOR

Scattered Lot Improvements for

Five Keaukaha Lots in Tract 1

WAIAKEA, SOUTH HILO, ISLAND OF HAWAII, STATE OF HAWAII,

IFB No.: IFB-16-HHL-014

APRIL 2016

STATE OF HAWAII

CONTRACT FOR GOODS OR SERVICES
BASED UPON
COMPETITIVE SEALED BIDS

This Contract, executed on the respective dates indicated below, is effective as of _____, _____, between Department of Hawaiian Home Lands, *(Insert name of state department, agency, board or commission)* State of Hawaii ("STATE"), by its Chairman, Hawaiian Homes Commission, *(Insert title of person signing for State)* (hereafter also referred to as the HEAD OF THE PURCHASING AGENCY or designee ("HOPA")), whose address is 91-5420 Kapolei Parkway, Kapolei, Hawaii 96707 _____ and _____ ("CONTRACTOR"), a _____ *(Insert corporation, partnership, joint venture, sole proprietorship. or other legal form of the Contractor)* under the laws of the State of _____, whose business address and federal and state taxpayer identification numbers are as follows: _____

_____

RECITALS

A. The STATE desires to retain and engage the CONTRACTOR to provide the goods or services, or both, described in this Contract and its attachments, and the CONTRACTOR is agreeable to providing said goods or services, or both.

B. The STATE has issued an invitation for competitive sealed bids, and has received and reviewed bids submitted in response to the invitation.

C. The solicitation for bids and the selection of the CONTRACTOR were made in accordance with section 103D-302, Hawaii Revised Statutes ("HRS"), Hawaii Administrative Rules, Title 3, Department of Accounting and General Services, Subtitle 11 ("HAR"), Chapter 122, Subchapter 5, and applicable procedures established by the appropriate Chief Procurement Officer ("CPO").

D. The CONTRACTOR has been identified as the lowest responsible and responsive bidder whose bid meets the requirements and criteria set forth in the invitation.

E. Pursuant to HHCA of 1920, as amended, the STATE *(Legal authority to enter into this Contract)* is authorized to enter into this Contract.

F. Money is available to fund this Contract pursuant to:

(1) Hawaiian Homes Trust Fund *(Identify state sources)*

or (2) _____ *(Identify federal sources)*

or both, in the following amounts: State $ _____

Federal $ _____

NOW, THEREFORE, in consideration of the promises contained in this Contract, the STATE and the CONTRACTOR agree as follows:

1. Scope of Services. The CONTRACTOR shall, in a proper and satisfactory manner as determined by the STATE, provide all the goods or services, or both, set forth in the Invitation for Bids number IFB-16-HHL-014 ("IFB") * and the CONTRACTOR'S accepted bid ("Bid"), both of which, even if not physically attached to this Contract, are made a part of this Contract.

2. Compensation. The CONTRACTOR shall be compensated for goods supplied or services performed, or both, under this Contract in a total amount not to exceed

* and summarized in Attachment S-1

TBD DOLLARS ($ TBD), including approved costs incurred and taxes, at the time and in the manner set forth in the IFB and CONTRACTOR'S Bid. And generally described in Attachment S-2.

3. Time of Performance. The services or goods required of the CONTRACTOR under this Contract shall be performed and completed in accordance with the Time of Performance set forth in Attachment-S3, which is made a part of this Contract.

4. Bonds. The CONTRACTOR ☒ is required to provide or ☐ is not required to provide: ☐ a performance bond, ☐ a payment bond, ☒ a performance and payment bond each in the amount of _____ DOLLARS ($ _____).

5. Standards of Conduct Declaration. The Standards of Conduct Declaration of the CONTRACTOR is attached to and made a part of this Contract.

6. Other Terms and Conditions. The General Conditions, Construction General Conditions, and any Special Conditions are attached to and made a part of this Contract. In the event of a conflict between the General Conditions, Construction General Conditions, and the Special Conditions, the Special Conditions shall control. In the event of a conflict among the documents, the order of precedence shall be as follows: (1) this Contract, including all attachments and addenda; (2) the IFB, including all attachments and addenda; and (3) the CONTRACTOR'S Bid.

7. Liquidated Damages. Liquidated damages shall be assessed in the amount of TWO HUNDRED and 00/100 DOLLARS ($ 200.00) per day, in accordance with the terms of paragraph 9 of the General Conditions.

8. Notices. Any written notice required to be given by a party to this Contract shall be (a) delivered personally, or (b) sent by United States first class mail, postage prepaid. Notice to the STATE shall be sent to the HOPA'S address indicated in the Contract. Notice to the CONTRACTOR shall be sent to the CONTRACTOR'S address indicated in the Contract. A notice shall be deemed to have been received three (3) days after mailing or at the time of actual receipt, whichever is earlier. The CONTRACTOR is responsible for notifying the STATE in writing of any change of address.

IN VIEW OF THE ABOVE, the parties execute this Contract by their signatures, on the dates below, to be effective as of the date first above written.

STATE

_____
(Signature)

Jobie M. K. Masagatani
(Print Name)

Chairman, Hawaiian Homes Commission
(Print Title)

_____
(Date)

CONTRACTOR

CORPORATE SEAL
(If available)

_____
(Name of Contractor)

_____
(Signature)

_____
(Print Name)

_____ *
(Print Title)

_____
(Date)

APPROVED AS TO FORM:

_____
Deputy Attorney General

*Evidence of authority of the CONTRACTOR'S representative to sign this Contract for the CONTRACTOR must be attached.

STATE OF HAWAII

CONTRACTOR'S ACKNOWLEDGMENT

STATE OF _____)
) **SS.**
_____ **COUNTY OF** _____)

On this _____ day of _____, _____ before me appeared _____ and _____, to me known, to be the person(s) described in and, who, being by me duly sworn, did say that he/she/they is/are _____ and _____ of _____, the CONTRACTOR named in the foregoing instrument, and that he/she/they is/are authorized to sign said instrument on behalf of the CONTRACTOR, and acknowledges that he/she/they executed said instrument as the free act and deed of the CONTRACTOR.

_____
(Signature)

(Notary Stamp or Seal)

_____
(Print Name)

Notary Public, State of _____

My commission expires: _____

Doc. Date: _____ # Pages: 2

Notary Name: _____ _____ Circuit

Doc. Description: Contract for Goods or Services Based Upon Competitive Sealed Bids

(Notary Stamp or Seal)

_____

_____
Notary Signature Date

N O T A R Y C E R T I F I C A T I O N

SAMPLE

STATE OF HAWAII

CONTRACTOR'S STANDARDS OF CONDUCT DECLARATION

For the purposes of this declaration:

"Agency" means and includes the State, the legislature and its committees, all executive departments, boards, commissions, committees, bureaus, offices; and all independent commissions and other establishments of the state government but excluding the courts.

"Controlling interest" means an interest in a business or other undertaking which is sufficient in fact to control, whether the interest is greater or less than fifty per cent (50%).

"Employee" means any nominated, appointed, or elected officer or employee of the State, including members of boards, commissions, and committees, and employees under contract to the State or of the constitutional convention, but excluding legislators, delegates to the constitutional convention, justices, and judges. (Section 84-3, HRS).

On behalf of _____, CONTRACTOR, the undersigned does declare as follows:

1. CONTRACTOR ☐ is* ☐ is not a legislator or an employee or a business in which a legislator or an employee has a controlling interest. (Section 84-15(a), HRS).
2. CONTRACTOR has not been represented or assisted personally in the matter by an individual who has been an employee of the agency awarding this Contract within the preceding two years and who participated while so employed in the matter with which the Contract is directly concerned. (Section 84-15(b), HRS).
3. CONTRACTOR has not been assisted or represented by a legislator or employee for a fee or other compensation to obtain this Contract and will not be assisted or represented by a legislator or employee for a fee or other compensation in the performance of this Contract, if the legislator or employee had been involved in the development or award of the Contract. (Section 84-14 (d), HRS).
4. CONTRACTOR has not been represented on matters related to this Contract, for a fee or other consideration by an individual who, within the past twelve (12) months, has been an agency employee, or in the case of the Legislature, a legislator, and participated while an employee or legislator on matters related to this Contract. (Sections 84-18(b) and (c), HRS).

CONTRACTOR understands that the Contract to which this document is attached is voidable on behalf of the STATE if this Contract was entered into in violation of any provision of chapter 84, Hawaii Revised Statutes, commonly referred to as the Code of Ethics, including the provisions which are the source of the declarations above. Additionally, any fee, compensation, gift, or profit received by any person as a result of a violation of the Code of Ethics may be recovered by the STATE.

CONTRACTOR

By _____
(Signature)

Print Name _____

Print Title _____

Name of Contractor _____

Date _____

* Reminder to Agency: If the "is" block is checked and if the Contract involves goods or services of a value in excess of $10,000, the Contract must be awarded by competitive sealed bidding under section 103D-302, HRS, or a competitive sealed proposal under section 103D-303, HRS. Otherwise, the Agency may not award the Contract unless it posts a notice of its intent to award it and files a copy of the notice with the State Ethics Commission. (Section 84-15(a), HRS).

SAMPLE

STATE OF HAWAII

SCOPE OF SERVICES

Project: Scattered Lot Improvements for Five (5) Keaukaha Lots In, Tract 1
Location: Waiakea, South Hilo, County of Hawaii, State of Hawaii
IFB No. IFB-16-HHL-014
Contractor: TBD

Pursuant to 103D, Hawaii Revised Statutes, the CONTRACTOR shall perform and provide the Scope of Services listed below and detailed in Invitation for Bids IFB-16-HHL-014 and in CONTRACTOR's proposal submitted _____, in a proper and satisfactory manner as determined by the STATE and in accordance with all Federal, State and local laws, both of which are incorporated by reference.

Location of Lots:

Keaukaha Lot 58-B, Andrew Avenue, TMK 3-2-1-021:072
Keaukaha Lot 59-B, Desha Avenue, TMK 3-2-1-021:029
Keaukaha Lot 63-A, Nahalea Avenue, TMK 3-2-1-021:100
Keaukaha Lot 131, Desha & Lauae Yung Avenue, TMK 3-2-1-021:010
Keaukaha Lot 279, Lyman Avenue, TMK 3-2-1-023:071

Scope of Work:

Description

This project details clearing, grubbing, protecting trees, vegetation, and other objects designated to remain, removing and disposing of vegetation, debris, and unwanted materials from the house lot parcel and other areas designated in the plans. Perform clearing and grubbing in advance of grading operations.

Clearing is defined as removing and disposing of all unwanted surface materials, such as trees, brush, grass, weeds, downed trees, and other material.

Grubbing is defined as removing and disposing of all unwanted vegetative matter from underground, such as stumps, roots, buried logs, and other debris.

Debris is defined as usable or unwanted material produced by clearing and grubbing.

Construction

A. Best Management Practices (BMP) – ensure that all BMP measures are in place before clearing and grubbing starts. If BMP measure is removed temporarily to accommodate construction operations, reinstall before end of workday. The silt fence location is along the west and north property lines of the house lot parcel (see enclosed TMK), about 300 linear feet in length.

SAMPLE

STATE OF HAWAII

SCOPE OF SERVICES

B. Limits – the clearing and grubbing work is intended to be within the house lot parcel. Any work outside of the house lot parcel requires prior approval by Department of Hawaiian Home Lands (DHHL), Engineer, and the affected adjacent property owner.

C. Clearing – clear all surface objects, including trees, logs, roots of downed trees, brush, residue of agricultural, grass, weeds, concrete, masonry, and unwanted materials, such as lumber, trash, and loose debris.

Preserve trees, shrubs, plants, and other objects designated to remain within the established limits.

Protect remaining trees and shrubbery from injury or damage. No trees shall be removed until all tree protection zones are established and approved by the Engineer. Cut trees to be removed without injuring trees and shrubbery that are to remain.

D. Grubbing – grub areas below natural ground surface of vegetative and unwanted material interfering with proposed work, within limits specified.

Leave in place, all undisturbed and sound stumps and nonperishable solid objects that will be more than 3 feet below subgrade and embankment slopes. Leave in place, stumps and nonperishable solid objects that extend less than 3 inches above the ground line when they are outside the excavation and embankment areas. Cut stumps flush or below the final slope line.
Backfill stump holes and other holes with embankment materials and compact with the clearing and grubbing equipment.

E. Removal and Disposal of Material – remove material and debris, and dispose of at an authorized disposal site. Obtain written authorization from property owners and government authorities for disposal locations outside road-right-of-way limits.

Leave roadway and adjacent areas with neat and finished appearance. Dispose of slashing's, flammable material, and other debris within or adjacent to road right-of-way. Do not burn material or debris.

SAMPLE

STATE OF HAWAII

COMPENSATION AND PAYMENT SCHEDULE

Project: Scattered Lot Improvements for Five (5) Keaukaha Lots In Tract 1
Location: Waiakea, South Hilo, County of Hawaii, State of Hawaii
IFB No. IFB-16-HHL-014
Contractor: TBD

The State shall pay the CONTRACTOR a sum not to exceed _____ **AND __/100 DOLLARS ($_____)** for the satisfactory completion of the work under this contract.

ITEMS	DESCRIPTION	AMOUNT	TOTALS
Item #1 Lot 58-B			
A.	Lot 58-B-1	$_____	
B.	Lot 58-B-2	$_____	
	Sub-total (Item #1: A + B)		$_____
Item #2: Lot 59-B			
A.	Lot 59-B-1	$_____	
B.	Lot 59-B-2	$_____	
	Sub-total (Item #2: A + B)		$_____
Item #3: Lot 63-A			
A.	Lot 63-A	$_____	
B.	Lot 63-B	$_____	
	Sub-total (Item #3: A + B)		$_____
Item #4: Lot 131-A			
A.	Lot 131-A-1	$_____	
B.	Lot 131-A-2	$_____	
C.	Lot 131-A-3	$_____	
	Sub-total (Item #4: A+B+C)		$_____
Item #5: Lot 279			
A.	Lot 279-A	$_____	
B.	Lot 279-B	$_____	
	Sub-total (Item#5: A+B)		$_____
Item #6: All Lots	Monthly Maintenance		
	$_____ @ 12 months		$_____
Item #7:	Allowance (See SC – 6)		$ 300,000.00
	Grand Total (Items #1 thru #7)		$_____

Aggregate Fill Material (2 ½" Selected Borrow #42040) Cost per Ton $_____. Cost to be deducted from allowance if needed.

Note: The Allowance is to be used within the authorized areas on an "As Needed" basis and other related work, with the authorization of the DHHL Project Manager.

SAMPLE

STATE OF HAWAII

TIME OF PERFORMANCE

Project: Scattered Lot Improvements for Five (5) Keaukaha Lots In, Tract 1
Location: Waiakea, South Hilo, County of Hawaii, State of Hawaii
IFB No. IFB-16-LLC-014
Contractor: TBD

1. The Time of Performance for this Contract shall be One Hundred Eighty (180) Calendar Days from the effective date specified in the Notice to Proceed, unless extended by delays excused by the STATE as documented in writing. The Notice to Proceed shall be issued by the STATE separately to the CONTRACTOR.

2. This Contract shall expire on the date on which the later of the following occurs:
   (a) the State makes final payment to the CONTRACTOR in accordance with (1) paragraph 17(d) of the General Conditions (AG-008 103D General Conditions) and (2) no dispute between the parties hereto as to the Work or other obligations of the CONTRACTOR hereunder is outstanding, or
   (b) the STATE issues a Final Acceptance letter to the CONTRACTOR.

3. The Contract expiration date is for administrative purposes only and not to be confused with the Time of Performance which refers to the time in which the CONTRACTOR is required to complete the work, or with any continuing obligations on the part of the CONTRACTOR.

SAMPLE

STATE OF HAWAII

CERTIFICATE OF EXEMPTION FROM CIVIL SERVICE

1. By Heads of Departments Delegated by the Director of the Department of Human Resources Development ("DHRD").*

Pursuant to a delegation of the authority by the Director of DHRD, I certify that the services to be provided under this Contract, and the person(s) providing the services under this Contract are exempt from the civil service, pursuant to § 76-16, Hawaii Revised Statutes (HRS).

(Signature) _____ (Date) _____

Jobie M. K. Masagatani
(Print Name)

Chairman, Hawaiian Homes Commission
(Print Title)

* This part of the form may be used by all department heads and the heads of attached agencies to whom the Director of DHRD expressly has delegated authority to certify § 76-16, HRS, civil service exemptions. The specific paragraph(s) of § 76-16, HRS, upon which an exemption is based should be noted in the contract file. If an exemption is based on § 76-16(b)(15), the contract must meet the following conditions:

(1) It involves the delivery of completed work or product by or during a specific time;
(2) There is no employee-employer relationship; and
(3) The authorized funding for the service is from other than the "A" or personal services cost element.

NOTE: Not all attached agencies have received a delegation under § 76-16(b)(15). If in doubt, attached agencies should check with the Director of DHRD prior to certifying an exemption under § 76-16(b)(15). Authority to certify exemptions under §§76-16(b)(2), and 76-16(b)(12), HRS, has not been delegated; only the Director of DHRD may certify §§ 76-16(b)(2), and 76-16(b)(12) exemptions.

2. By the Director of DHRD, State of Hawaii.

I certify that the services to be provided under this Contract, and the person(s) providing the services under this Contract are exempt from the civil service, pursuant to §76-16, HRS.

(Signature) _____ (Date) _____

(Print Name) _____

(Print Title, if designee of the Director of DHRD) _____

Corporate Resolution Form

CORPORATE RESOLUTION
(Name of Corporation - Use Letterhead)

I, _____, Secretary of _____ Corporation, a _____ corporation, do hereby certify that the following is a full, true and correct copy of a resolution duly adopted by the Board of Directors of said Corporation, at its meeting duly called and held at the office of the Corporation located at _____,

(address)

on the _____ day of _____, 20_____, at which a quorum was present and acting throughout; and that said resolution has not been modified, amended or rescinded and continues in full force and effect:

> "RESOLVED that any individual at the time holding the position of President or Vice President, be, and each of them hereby is, authorized to execute on behalf of the Corporation any bid, proposal or contract for the sale or rental of the products of the Corporation or for services to be performed by the Corporation and to execute any bond required by any such bid proposal or contract with the United States Government or the State of Hawaii or the City and County of Honolulu, or any County or Municipal Government of said State, or any department or subdivision of any of them."

IN WITNESS WHEREOF, I have hereunto set my hand and affixed the corporate seal of said _____ Corporation this _____ day of _____, 20_____.

_____
Secretary

(Names and Addresses of:)
President
Vice President
Secretary

EXHIBIT A

SURETY [BID] [PROPOSAL] BOND
(11/17/98)

Bond No. _____

KNOW TO ALL BY THESE PRESENTS:

That we, _____,
(Full Name or Legal Title of Offeror)

as Offeror, hereinafter called Principal, and _____,
(Name of Bonding Company)

as Surety, hereinafter called Surety, a corporation authorized to transact business as a Surety

in the State of Hawaii, are held and firmly bound unto _____,
(State/County Entity)
as Owner, hereinafter called Owner, in the penal sum of _____

_____
(Required Amount of Bid Security)

Dollars ($_____), lawful money of the United States of America, for the payment of which sum well and truly to be made, the said Principal and the said Surety bind ourselves, our heirs, executors, administrators, successors and assigns, jointly and severally, firmly by these presents.

WHEREAS:

The Principal has submitted an offer for _____

_____.
(Project by Number and Brief Description)

NOW, THEREFORE:

The condition of this obligation is such that if the Owner shall reject said offer, or in the alternate, accept the offer of the Principal and the Principal shall enter into a Contract with the Owner in accordance with the terms of such offer, and give such bond or bonds as may be specified in the solicitation or Contract Documents with good and sufficient surety for the faithful performance of such Contract and for the prompt payment of labor and material furnished in the prosecution thereof as specified in the solicitation then this obligation shall be null and void, otherwise to remain in full force and effect.

Signed this _____ day of _____, _____.

(Seal)

_____
Name of Principal (Offeror)

_____
Signature

_____
Title

(Seal)

_____
Name of Surety

_____
Signature

_____
Title

EXHIBIT B

PERFORMANCE BOND (SURETY)
(6/21/07)

KNOW TO ALL BY THESE PRESENTS:

That _____,
(Full Legal Name and Street Address of Contractor)

as Contractor, hereinafter called Principal, and _____

_____
(Name and Street Address of Bonding Company)

as Surety, hereinafter called Surety, a corporation(s) authorized to transact business as a surety in the State of Hawaii, are held and firmly bound unto the _____,
(State/County Entity)

its successors and assigns, hereinafter called Obligee, in the amount of _____

_____
DOLLARS ($_____), to which payment Principal and Surety bind themselves, their heirs, executors, administrators, successors and assigns, jointly and severally, firmly by these presents.

WHEREAS, the above-bound Principal has signed a Contract with Obligee on _____, for the following project:_____
_____
_____
_____
_____
_____
hereinafter called Contract, which Contract is incorporated herein by reference and made a part hereof.

NOW THEREFORE, the condition of this obligation is such that:

If the Principal shall promptly and faithfully perform, and fully complete the Contract in strict accordance with the terms of the Contract as said Contract may be modified or amended from time to time; then this obligation shall be void; otherwise to remain in full force and effect.

Surety to this Bond hereby stipulates and agrees that no changes, extensions of time, alterations, or additions to the terms of the Contract, including the work to be performed thereunder, and the specifications or drawings accompanying same, shall in any way affect its obligation on this bond, and it does hereby waive notice of any such changes, extensions of time, alterations, or additions, and agrees that they shall become part of the Contract.

In the event of Default by the Principal, of the obligations under the Contract, then after written Notice of Default from the Obligee to the Surety and the Principal and subject to the limitation of the penal sum of this bond, Surety shall remedy the Default, or take over the work to be performed under the Contract and complete such work, or pay moneys to the Obligee in satisfaction of the surety's performance obligation on this bond.

Signed this _____ day of _____, _____.

(Seal) _____
Name of Principal (Contractor)

* _____
Signature

_____
Title

(Seal) _____
Name of Surety

* _____
Signature

_____
Title

*ALL SIGNATURES MUST BE ACKNOWLEDGED
BY A NOTARY PUBLIC

EXHIBIT C

PERFORMANCE BOND
(11/17/98)

KNOW TO ALL BY THESE PRESENTS:

That we, _____,
(Full Legal Name and Street Address of Contractor)

as Contractor, hereinafter called Contractor, is held and firmly bound unto the

_____, its successors and assigns, as Obligee, hereinafter called
(State/County Entity)
Obligee, in the amount of _____

_____
(Dollar Amount of Contract)

DOLLARS ($_____), lawful money of the United States of America, for the payment of which to the said Obligee, well and truly to be made, Contractor binds itself, its heirs, executors, administrators, successors and assigns, firmly by these presents. Said amount is evidenced by:

- ☐ Legal tender;

- ☐ Share Certificate unconditionally assigned to or made payable at sight to _____
  Description _____
  _____;

- ☐ Certificate of Deposit, No. _____, dated _____, issued by _____,
  drawn on _____,
  a bank, savings institution or credit union insured by the Federal Deposit Insurance Corporation or the National Credit Union Administration, payable at sight or unconditionally assigned to _____
  _____;

- ☐ Cashier's Check No. _____, dated _____, issued by _____,
  drawn on _____,
  a bank, savings institution or credit union insured by the Federal Deposit Insurance Corporation or the National Credit Union Administration, payable at sight or unconditionally assigned to _____
  _____;

☐ Teller's Check No. _____, dated _____, issued by _____, drawn on _____, a bank, savings institution or credit union insured by the Federal Deposit Insurance Corporation or the National Credit Union Administration, payable at sight or unconditionally assigned to _____ _____;

☐ Treasurer's Check No. _____, dated _____, issued by _____, drawn on _____, a bank, savings institution or credit union insured by the Federal Deposit Insurance Corporation or the National Credit Union Administration, payable at sight or unconditionally assigned to _____ _____;

☐ Official Check No. _____, dated _____, issued by _____, drawn on _____, a bank, savings institution or credit union insured by the Federal Deposit Insurance Corporation or the National Credit Union Administration, payable at sight or unconditionally assigned to _____ _____;

☐ Certified Check No. _____, dated _____, accepted by a bank, savings institution or credit union insured by the Federal Deposit Insurance Corporation or the National Credit Union Administration, payable at sight or unconditionally assigned _____ _____;

WHEREAS:

The Contractor has by written agreement dated _____ entered into a contract with Obligee for the following Project: _____ _____ _____ _____ _____ hereinafter called Contract, which Contract is incorporated herein by reference and made a part hereof.

NOW, THEREFORE,

The condition of this obligation is such that, if Contractor shall promptly and faithfully perform the Contract in accordance with, in all respects, the stipulations, agreements, covenants and conditions of the Contract as it now exists or may be modified according to its terms, and shall deliver the Project to the Obligee, or to its successors or assigns, fully completed as in the Contract specified and free from all liens and claims and without further cost, expense or charge to the Obligee, its officers, agents, successors or assigns, free and harmless from all suits or actions of every nature and kind which may be brought for or on account of any injury or damage, direct or indirect, arising or growing out of the doing of said work or the repair or maintenance thereof or the manner of doing the same or the neglect of the Contractor or its agents or servants or the improper performance of the Contract by the Contractor or its agents or servants or from any other cause, then this obligation shall be void; otherwise it shall be and remain in full force and effect.

AND IT IS HEREBY STIPULATED AND AGREED that suit on this bond may be brought before a court of competent jurisdiction without a jury, and that the sum or sums specified in the said Contract as liquidated damages, if any, shall be forfeited to the Obligee, its successors or assigns, in the event of a breach of any, or all, or any part of, the covenants, agreements, conditions, or stipulations contained in the Contract or in this bond in accordance with the terms thereof.

The amount of this bond may be reduced by and to the extent of any payment or payments made in good faith hereunder.

Signed this _____ day of _____, _____.

(Seal) _____
Name of Contractor

* _____
Signature

_____
Title

*ALL SIGNATURES MUST BE ACKNOWLEDGED
BY A NOTARY PUBLIC

EXHIBIT D

LABOR AND MATERIAL PAYMENT BOND (SURETY)
(6/21/07)

KNOW TO ALL BY THESE PRESENTS:

That _____,
(Full Legal Name and Street Address of Contractor)

as Contractor, hereinafter called Principal, and _____

_____,
(Name and Street Address of Bonding Company)
as Surety, hereinafter called Surety, a corporation(s) authorized to transact business as a surety in the State of Hawaii, are held and firmly bound unto the _____,
(State/County Entity)

its successors and assigns, hereinafter called Obligee, in the amount of _____

_____
_____ Dollars ($_____), to which payment Principal and Surety bind themselves, their heirs, executors, administrators, successors and assigns, jointly and severally, firmly by these presents.

WHEREAS, the above-bound Principal has signed Contract with the Obligee on _____ for the following project:_____
_____
_____
_____
_____
hereinafter called Contract, which Contract is incorporated herein by reference and made a part hereof.

NOW THEREFORE, the condition of this obligation is such that if the Principal shall promptly make payment to any Claimant, as hereinafter defined, for all labor and materials supplied to the Principal for use in the performance of the Contract, then this obligation shall be void; otherwise to remain in full force and effect.

1. Surety to this Bond hereby stipulates and agrees that no changes, extensions of time, alterations, or additions to the terms of the Contract, including the work to be performed thereunder, and the specifications or drawings accompanying same, shall in any way affect its obligation on this bond, and it does hereby waive notice of any such changes, extensions of time, alterations, or additions, and agrees that they shall become part of the Contract.

2. A "Claimant" shall be defined herein as any person who has furnished labor or materials to the Principal for the work provided in the Contract.

Every Claimant who has not been paid amounts due for labor and materials furnished for work provided in the Contract may institute an action against the Principal and its Surety on this bond at the time and in the manner prescribed in Section 103D-324, Hawaii Revised Statutes, and have the rights and claims adjudicated in the action, and judgment rendered thereon; subject to the Obligee's priority on this bond. If the full amount of the liability of the Surety on this bond is insufficient to pay the full amount of the claims, then after paying the full amount due the Obligee, the remainder shall be distributed pro rata among the claimants.

Signed this _____ day of _____, _____.

(Seal) _____
Name of Principal (Contractor)

* _____
Signature

_____
Title

(Seal) _____
Name of Surety

* _____
Signature

_____
Title

*ALL SIGNATURES MUST BE ACKNOWLEDGED
BY A NOTARY PUBLIC

EXHIBIT E

LABOR AND MATERIAL PAYMENT BOND
(11/17/98)

KNOW TO ALL BY THESE PRESENTS:

That we, _____,
(Full Legal Name and Street Address of Contractor)

as Contractor, hereinafter called Contractor, is held and firmly bound unto the

_____, its successors and assigns, as Obligee, hereinafter called
(State/County Entity)

Obligee, in the amount of _____

_____
(Dollar Amount of Contract)

DOLLARS ($_____), lawful money of the United States of America, for the payment of which to the said Obligee, well and truly to be made, Contractor binds itself, its heirs, executors, administrators, successors and assigns, firmly by these presents. Said amount is evidenced by:

- ☐ Legal tender;
- ☐ Share Certificate unconditionally assigned to or made payable at sight to _____ Description _____ _____;
- ☐ Certificate of Deposit, No. _____, dated _____, issued by _____, drawn on _____, a bank, savings institution or credit union insured by the Federal Deposit Insurance Corporation or the National Credit Union Administration, payable at sight or unconditionally assigned to _____ _____;
- ☐ Cashier's Check No. _____, dated _____, issued by _____, drawn on _____, a bank, savings institution or credit union insured by the Federal Deposit Insurance Corporation or the National Credit Union Administration, payable at sight or unconditionally assigned to _____ _____;
- ☐ Teller's Check No. _____, dated _____, issued by _____, drawn on _____,

a bank, savings institution or credit union insured by the Federal Deposit Insurance Corporation or the National Credit Union Administration, payable at sight or unconditionally assigned to _____
_____;

☐ Treasurer's Check No. _____, dated _____, issued by _____, drawn on _____, a bank, savings institution or credit union insured by the Federal Deposit Insurance Corporation or the National Credit Union Administration, payable at sight or unconditionally assigned to _____
_____;

☐ Official Check No. _____, dated _____, issued by _____, drawn on _____, a bank, savings institution or credit union insured by the Federal Deposit Insurance Corporation or the National Credit Union Administration, payable at sight or unconditionally assigned to _____
_____;

☐ Certified Check No. _____, dated _____, accepted by a bank, savings institution or credit union insured by the Federal Deposit Insurance Corporation or the National Credit Union Administration, payable at sight or unconditionally assigned to _____
_____;

WHEREAS:

The Contractor has by written agreement dated _____ entered into a contract with Obligee for the following Project: _____
_____
_____
_____
_____
_____
hereinafter called Contract, which Contract is incorporated herein by reference and made a part hereof.

NOW, THEREFORE,

The condition of this obligation is such that, if Contractor shall promptly and faithfully perform the Contract in accordance with, in all respects, the stipulations, agreements, covenants and conditions of the Contract as it now exists or may be modified according to its terms, free from all liens and claims and without further cost, expense or charge to the Obligee, its officers, agents, successors or assigns, free and harmless from all suits or actions of every

nature and kind which may be brought for or on account of any injury or damage, direct or indirect, arising or growing out of the doing of said work or the repair or maintenance thereof or the manner of doing the same or the neglect of the Contractor or its agents or servants or the improper performance of the Contract by the Contractor or its agents or servants or from any other cause, and shall promptly pay all persons supplying labor and materials for the performance of the Contract, then this obligation shall be void; otherwise it shall be and remain in full force and effect.

AND IT IS HEREBY STIPULATED AND AGREED that suit on this bond may be brought before a court of competent jurisdiction without a jury, and that the sum or sums specified in the said Contract as liquidated damages, if any, shall be forfeited to the Obligee, its successors or assigns, in the event of a breach of any, or all, or any part of, the covenants, agreements, conditions, or stipulations contained in the Contract or in this bond in accordance with the terms thereof.

AND IT IS HEREBY STIPULATED AND AGREED that this bond shall inure to the benefit of any and all persons entitled to file claims for labor performed or materials furnished in said work so as to give any and all such persons a right of action as contemplated by Sections 103D-324(d) and 103D-324(e), Hawaii Revised Statutes.

The amount of this bond shall be reduced by and to the extent of any payment or payments made in good faith hereunder, inclusive of the payment of mechanics' liens which may be filed of record against the Project, whether or not claim for the amount of such lien be presented under and against this bond.

Signed this _____ day of _____, _____.

(Seal) _____
Name of Contractor

* _____
Signature

_____
Title

*ALL SIGNATURES MUST BE ACKNOWLEDGED
BY A NOTARY PUBLIC

EXHIBIT G

PERFORMANCE BOND (SURETY)
FOR SUPPLEMENTAL AGREEMENT
FOR GOODS AND SERVICES
(11/17/98)

KNOW TO ALL BY THESE PRESENTS:

That _____,
(Full Legal Name and Street Address of Contractor)

as Contractor, hereinafter called Principal, and _____

_____,
(Name and Street Address of Bonding Company)

as Surety, hereinafter called Surety, a corporation(s) authorized to transact business as a surety in the State of Hawaii, are held and firmly bound unto the _____,
(State/County Entity)
its successors and assigns, hereinafter called Obligee, in the amount of

_____
DOLLARS ($_____), to which payment Principal and Surety bind themselves, their heirs, executors, administrators, successors and assigns, jointly and severally, firmly by these presents.

WHEREAS, the above-bound Principal has entered into a Contract with Obligee dated _____ for _____
_____
_____
_____;
and entered into Supplemental Agreement No. _____, dated _____ for the period _____;
hereinafter collectively called Contract, which Contract is incorporated herein by reference and made a part hereof.

NOW THEREFORE, the condition of this obligation is such that:

If the Principal shall promptly and faithfully perform, and fully complete the Contract in strict accordance with the terms of the Contract as said Contract may be modified or amended from time to time; then this obligation shall be void; otherwise to remain in full force and effect.

Surety to this Bond hereby stipulates and agrees that no changes, extensions of time, alterations, or additions to the terms of the Contract, including the work to be performed thereunder, and the specifications or drawings accompanying same, shall in any way affect its

obligation on this bond, and it does hereby waive notice of any such changes, extensions of time, alterations, or additions, and agrees that they shall become part of the Contract.

In the event of Default by the Principal, of the obligations under the Contract, then after written Notice of Default from the Obligee to the Surety and the Principal, Surety shall either remedy the Default, or take over the work to be performed under the Contract and complete such work, subject, however, to the limitation of the penal sum of this bond.

Signed this _____ day of _____, _____.

(Seal) _____
Name of Principal (Contractor)

* _____
Signature

_____
Title

(Seal) _____
Name of Surety

* _____
Signature

_____
Title

*ALL SIGNATURES MUST BE ACKNOWLEDGED
BY A NOTARY PUBLIC

EXHIBIT H

PERFORMANCE BOND
FOR SUPPLEMENTAL AGREEMENT
FOR GOODS AND SERVICES
(11/17/98)

KNOW TO ALL BY THESE PRESENTS:

That we, _____,
(Full Legal Name and Street Address of Contractor)
as Contractor, hereinafter called Contractor, is held and firmly bound unto the

_____, its successors and assigns, as Obligee, hereinafter called Obligee,
(State/County Entity)
in the amount of _____
(Dollar Amount of Contract)
DOLLARS ($_____), lawful money of the United States of America, for the payment of which to the said Obligee, well and truly to be made, Contractor binds itself, its heirs, executors, administrators, successors and assigns, firmly by these presents. Said amount is evidenced by:

- ☐ Legal tender;

- ☐ Share Certificate unconditionally assigned to or made payable at sight to _____;
  Description _____;

- ☐ Certificate of Deposit, No. _____, dated _____ issued by _____,
  drawn on _____,
  a bank, savings institution or credit union insured by the Federal Deposit Insurance Corporation or the National Credit Union Administration, payable at sight or unconditionally assigned to _____
  _____;

- ☐ Cashier's Check No. _____, dated _____, drawn on _____,
  a bank, savings institution or credit union insured by the Federal Deposit Insurance Corporation or the National Credit Union Administration, payable at sight or unconditionally assigned to _____
  _____;

- ☐ Teller's Check No. _____, dated _____, drawn on _____,
  a bank, savings institution or credit union insured by the Federal Deposit Insurance Corporation or the National Credit Union Administration, payable at sight or unconditionally assigned to _____
  _____;

☐ Treasurer's Check No. _____, dated _____, drawn on _____, a bank, savings institution or credit union insured by the Federal Deposit Insurance Corporation or the National Credit Union Administration, payable at sight or unconditionally assigned to _____ _____;

☐ Official Check No. _____, dated _____, drawn on _____, a bank, savings institution or credit union insured by the Federal Deposit Insurance Corporation or the National Credit Union Administration, payable at sight or unconditionally assigned to _____ _____;

☐ Certified Check No. _____, dated _____, accepted by a bank, savings institution or credit union insured by the Federal Deposit Insurance Corporation or the National Credit Union Administration, payable at sight or unconditionally assigned to _____ _____;

WHEREAS:

The Contractor has by written agreement dated _____ entered into a contract with Obligee for the following Project: _____ _____ _____ and entered into Supplemental Agreement No. _____, dated _____ for the period _____; hereinafter collectively called Contract, which Contract is incorporated herein by reference and made a part hereof.

NOW, THEREFORE,

The condition of this obligation is such that, if Contractor shall promptly and faithfully perform the Contract in accordance with, in all respects, the stipulations, agreements, covenants and conditions of the Contract as it now exists or may be modified according to its terms, and shall deliver the Project to the Obligee, or to its successors or assigns, fully completed as in the Contract specified and free from all liens and claims and without further cost, expense or charge to the Obligee, its officers, agents, successors or assigns, free and harmless from all suits or actions of every nature and kind which may be brought for or on account of any injury or damage, direct or indirect, arising or growing out of the doing of said work or the repair or maintenance thereof or the manner of doing the same or the neglect of the Contractor or its agents or servants or the improper performance of the Contract by the Contractor or its agents or servants or from any other cause, then this obligation shall be void; otherwise it shall be and remain in full force and effect.

AND IT IS HEREBY STIPULATED AND AGREED that suit on this bond may be brought before a court of competent jurisdiction without a jury, and that the sum or sums specified in the said Contract as liquidated damages, if any, shall be forfeited to the Obligee, its successors or assigns, in the event of a breach of any, or all, or any part of, the covenants, agreements, conditions, or stipulations contained in the Contract or in this bond in accordance with the terms thereof.

The amount of this bond may be reduced by and to the extent of any payment or payments made in good faith hereunder.

Signed this _____ day of _____, _____.

(Seal) _____
Name of Contractor

* _____
Signature

_____
Title

*ALL SIGNATURES MUST BE ACKNOWLEDGED
BY A NOTARY PUBLIC

EXHIBIT I

CONTRACTOR ACKNOWLEDGMENT

[FOR USE WITH PERFORMANCE AND PAYMENT BONDS]
(11/12/97)

CONTRACTOR ACKNOWLEDGMENT:

STATE OF _____)
: SS.
_____ COUNTY OF _____)

On this _____ day of _____, 19_____, before me appeared _____ and _____ to me known to be the person(s) described in and, who, being by me duly sworn, did say that he/she/they is/are _____ and _____ of _____ the Contractor named in the foregoing instrument, and that he/she/they is/are authorized to sign said instrument in behalf of the Contractor, and acknowledges that he/she/they executed said instrument as the free act and deed of the Contractor.

(Notary Seal)

_____
Notary Public

State of _____

My commission expires: _____

EXHIBIT J

SURETY ACKNOWLEDGMENT

[FOR USE WITH SURETY PERFORMANCE AND PAYMENT BONDS]
(11/12/97)

SURETY ACKNOWLEDGMENT:

STATE OF _____)
: SS.
_____ COUNTY OF _____)

On this _____ day of _____, 19_____, before me personally came _____ to me known to be the person described in and, who, being by me, did depose and say that _____ resides in _____; that _____ is the Attorney-in-Fact of _____ the corporation described in and which executed the attached instrument; that _____ knows corporate seal of the said corporation; that the seal affixed to the said instrument is such corporate seal; and that it was so affixed by order of the Board of Directors of the said corporation; and that _____ signed _____ name thereto by like order.

(Notary Seal)

_____
Notary Public

State of _____

My commission expires: _____

STATE OF HAWAII
STATE PROCUREMENT OFFICE

CERTIFICATION FOR HAWAII PRODUCT PREFERENCE

1. Legal Name of the company whose product is mined, excavated, produced, manufactured, raised or grown in the state of Hawaii Requester: _____	2. dba: _____ 3. Hawaii General Excise Tax Number:
4. Address	5. Email Address
6. Contact Person	7. Phone

Submit one (1) form for each product.

8. Specify and provide details of the product for which preference is claimed (ie: Milk, white, 2% low fat, 1 gallon, four (4) to a case etc.):

9. Quality Standards met by product (ie. California Milk Standards, ASTM/AHSTO,USDA, etc.) :

10. Product available on: ☐Oahu ☐ Maui ☐ Hawaii ☐ Lanai ☐ Kauai ☐ Molokai

11. Product is certified an agricultural, aquacultural, horticultural, silvicultural, floricultural, or livestock product raised, grown, or harvested in the state of Hawaii.

☐ Yes or ☐ No

12	Definition: "Hawaii Input" is the part of the product cost attributable to production, manufacturing, or other expenses arising within the state of Hawaii. Fill in every line in column s A, B, & C	**A** **Hawaii Input**	**B** **Non- Hawaii input**	**C** **Total A + B**
a	Cost to mine, excavate, produce, manufacture, raise, or grow the materials in the state of Hawaii.	$_____ per unit	$_____ per unit	$_____ per unit
b	The added value of that portion of the cost of imported materials incurred after landing in the state of Hawaii, including but not limited to other articles, materials, and supplies, added to the imported materials.	$_____ per unit	$_____ per unit	$_____ per unit
c	Cost of labor, variable overhead, utilities, and services, incurred in the production and manufacturing of materials or products in the state of Hawaii	$_____ per unit	$_____ per unit	$_____ per unit
d	Fixed overhead cost and amortization or depreciation cost, if any, for buildings, tools, and equipment situated and located in the state of Hawaii used in the production or manufacturing of a product.	$_____ per unit	$_____ per unit	$_____ per unit
e	**Totals**	$_____ per unit (Add Column A)	$_____ per unit (Add Column B)	$_____ per unit (Add Colum C)

13. Percent of Hawaii Input _____ % (12e. Column A Total ÷ Column C Total)

14. Failure to adequately verify, deliver, or supply Hawaii products. A procurement officer who has awarded a contract finds the contractor has failed to comply with HRS §103D-1002, Hawaii products, the contract shall be cancelled and the findings shall be referred for debarment or suspension proceedings under HRS §103D-702. Any purchase made or any contract awarded or executed in violation of this section shall be void and no payment shall be made by any purchasing agency. If debarred, the person or company shall be prohibited from bidding on any state or county government solicitations for up to three (3) years.

Should the procurement officer receiving a protest challenging the validity of the classification of a Hawaii product request an audit of the information of the proper classification of the product as defined under HRS §103D-1002, the cost of the audit shall be paid for by the requester.

In the event of any change that materially alters the offeror's ability to supply the certified Hawaii products, the offeror shall notify in writing the procurement officer within five (5) working days of knowing of the change and the parties shall enter into discussions for the purposes of revising the contract or terminating the contract for convenience.

Information submitted is CONFIDENTIAL or PROPRIETARY DATA, and the procurement officer shall not disclose this form, pursuant to HRS §92F-13(3) on government records; exception's to general rule.

I certify, under penalties set forth in HRS §103D-1002, on Hawaii products, that the information provided herein has been examined by me and to the best of my knowledge and belief is true, correct, complete, and made in good faith pursuant to HRS §103D-101.

Signature of Authorized Representative: _____ Date:_____

Print Name of Authorized Representative:_____ Title:_____

GOVERNMENT USE ONLY

☐ APPROVED ☐ DISAPPROVED

_____ _____

Procurement Officer Signature Government Agency

FORM 1

CERTIFICATION OF BIDDER'S PARTICIPATION IN APPROVED APPRENTICESHIP PROGRAM UNDER ACT 17

I. Bidder's Identifying Information

A. Legal Business Name:

B. Project Bid Title & Reference No.:

C. Contact Person's Name:

1. Phone No.: 2. E-Mail:

II. Apprenticeable Trades To Be Employed* A. (List)	B. Apprenticeship Sponsor* (One Sponsor Per Form)	C. No. Enrolled (# of apprentices currently enrolled as of bidder's request date)	D. No. Completed (# of apprentices who completed the apprenticeship program in the 12 months prior to request date)
1.			
2.			
3.			
4.			
5.			
6.			

III. Bidder's Certification

I certify that the above information is accurate to the best of my knowledge. I understand that my willful misstatement of facts may cause forfeiture of the preference under Act 17 and may result in criminal action. I give permission for outside sources to be contacted and for them to disclose any information necessary to verify the bidder's preference.

A. Name (Type) B. Title

C. Signature (original signature required) D. Date

IV. Apprenticeship Sponsor's Contact Information

A. Training Coordinator's Name:

B. Address:

C. Phone No.: D. E-Mail: E. Fax No:

V. Apprenticeship Program Sponsor's Certification

I certify that the above information is accurate to the best of my knowledge. I understand that my willful misstatement of facts may cause forfeiture of the bidder's preference and may result in criminal action. I give permission for outside sources to be contacted and for them to disclose any information necessary to verify the bidder's preference under Act 17.

A. Name of Authorized Official B. Title

C. Signature (original signature required) D. Date

* Name of Apprenticeable Trade and Apprenticeship Sponsor must be the *same* as recorded in the List of Construction Trades in Registered Apprenticeship Programs that is posted on the State Department of Labor and Industrial Relations website.

(Rev. 08/25/2010)

FORM 2

MONTHLY REPORT OF CONTRACTOR'S PARTICIPATION IN APPROVED APPRENTICESHIP PROGRAM UNDER ACT 17

I. Contractor's Identifying Information	II. Reporting Period	
A. Legal Business Name:	A. Month:	B. Year:
B. Project Contract Title & Reference No.:		
C. Contact Person's Name:		
1. Phone No.: 2. E-Mail:		

III. Apprenticeship Program (Complete a separate form for *each* apprenticeship program in which workers are employed on the project.)

A. Contractor was a party to an apprenticeship program or programs with the following sponsor: (Give sponsor's name.)*	B. Was the contractor a party to the program during the *entire* report month?
	1. Yes ☐
	2. No ☐ If NO, state applicable period and why (may be subject to sanctions.)

IV. Contractor's Certification

I certify that the above information is accurate to the best of my knowledge. I understand that my willful misstatement of facts may cause forfeiture of the preference under Act 17 and may result in criminal action. I give permission for outside sources to be contacted and for them to disclose any information necessary to verify the bidder's preference.

A. Name (Type)	B. Title
C. Signature (original signature required)	D. Date

V. Apprenticeship Sponsor's Contact Information

A. Training Coordinator's Name:		
B. Address:		
C. Phone No.:	D. E-Mail:	E. Fax No:

VI. Apprenticeship Program Sponsor's Certification

I certify that the above information is accurate to the best of my knowledge. I understand that my willful misstatement of facts may cause forfeiture of the bidder's preference and may result in criminal action. I give permission for outside sources to be contacted and for them to disclose any information necessary to verify the bidder's preference under Act 17.

A. Name of Authorized Official	B. Title
C. Signature (original signature required)	D. Date

* Name of Apprenticeship Sponsor must be the *same* as recorded in the List of Construction Trades in Registered Apprenticeship Programs that is posted on the State Department of Labor and Industrial Relations website.

(Rev. 08/25/2010)

CERTIFICATION OF COMPLIANCE
FOR
EMPLOYMENT OF STATE RESIDENTS
HRS CHAPTER 103B, AS AMENDED BY ACT 192, SLH 2011

Project Title: _____

Agency Project No: _____

Contract No.: _____

As required by Hawai'i Revised Statutes Chapter103B, as amended by Act 192, Session Laws of Hawaii 2011–Employment of State Residents on Construction Procurement Contracts, I hereby certify under oath, that I am an officer of _____ and
(Name of Contractor or Subcontractor Company)
for the Project Contract indicated above, _____ was in
(Name of Contractor or Subcontractor Company)
compliance with HRS Chapter 103B, as amended by Act 192, SLH 2011, by employing a workforce of which not less than eighty percent are Hawai'i residents, as calculated according to the formula in the solicitation, to perform this Contract.

☐ I am an officer of the **Contractor** for this contract.

☐ I am an officer of a **Subcontractor** for this contract.

CORPORATE SEAL

_____
(Name of Company)

_____
(Signature)

_____
(Print Name)

_____
(Print Title)

Subscribed and sworn to me before this
_____ day of _____, 2011.

Doc. Date: _____ # of Pages_____ 1st Circuit
Notary Name: _____
Doc. Description: _____

_____
Notary Public, 1st Circuit, State of Hawai'i
My commission expires: _____

_____
Notary Signature Date
NOTARY CERTIFICATION

EXHIBIT 2