WATER NOTES

1. UNLESS OTHERWISE SPECIFIED, ALL MATERIALS AND CONSTRUCTION OF WATER SYSTEM FACILITIES AND APPURTENANCES SHALL BE IN ACCORDANCE WITH THE CITY AND COUNTY OF HONOLULU BOARD OF WATER SUPPLY'S "WATER SYSTEM STANDARDS", DATED 2002, THE "WATER SYSTEM EXTERNAL CORROSION CONTROL STANDARDS", VOLUME 3, DATED 1991, AND ALL SUBSEQUENT AMENDMENTS AND ADDITIONS.

2. ALL PLANS APPROVED BY THE BOARD OF WATER SUPPLY ARE BASED SOLELY ON THE ADEQUACY OF THE WATER SUPPLY. ALL OTHER FEATURES OF THE WATER SYSTEM, SUCH AS LINES, GRADES, FITTINGS, DRAINAGE, ETC., AND OTHER FEATURES OF IMPROVEMENTS SHALL NOT BE THE RESPONSIBILITY OF THE BOARD OF WATER SUPPLY.

3. UNLESS OTHERWISE SPECIFIED, ALL LATERALS AND CONNECTIONS SHALL BE COPPER TYPE "C-1", WITH BLIND METER SPLICE LENGTHS AT 7-1/2 INCHES TO ACCOMMODATE 3/4 INCH METERS. TYPE "C-1" SERVICE LATERALS SHALL BE ONE 1-1/2 INCH DIAMETER LATERAL BRANCHING TO TWO 1-INCH DIAMETER CONNECTIONS.

4. TEST PRESSURE SHALL BE 150 PSI. DURING THE 30-MINUTE PRESSURE TEST, THE PRESSURE SHALL NOT DROP MORE THAN 10 PSI.

5. THE CONTRACTOR SHALL NOTIFY BWS CAPITAL PROJECTS DIVISION, CONSTRUCTION SECTION IN WRITING AND SUBMIT SIX (6) SETS OF APPROVED CONSTRUCTION PLANS ONE WEEK PRIOR TO COMMENCING WORK ON THE WATER SYSTEM.

6. AFTER INSTALLATION OF TAPPING SLEEVE AND VALVE PRIOR TO ACTUAL TAPPING OPERATIONS, THE ASSEMBLY SHALL BE TESTED AT 150 PSI ON BOTH SIDES OF THE VALVE.

7. WATER COMMITMENT SHALL BE CANCELED IF THE APPROVED CONSTRUCTION PLANS ARE ALLOWED TO LAPSE.

8. THE CONTRACTOR SHALL CHLORINATE THE ENTIRE SURFACE OF EACH PIPE AND FITTING WITH DISINFECTION SOLUTION OF 5 OUNCES OF SODIUM HYPOCHLORITE MIXED WITH 10 GALLONS OF WATER. (FOR CONNECTION ONLY)

9. THE CONTRACTOR SHALL BE RESPONSIBLE FOR THE PROTECTION OF ALL WATER LINES DURING CONSTRUCTION. THE CONTRACTOR SHALL BE ESPECIALLY CAREFUL WHEN EXCAVATING BEHIND WATER LINES, TEES AND BENDS WHEREVER THERE IS A POSSIBILITY OF WATER LINE MOVEMENT DUE TO THE REMOVAL OF THE SUPPORTING EARTH BEYOND THE EXISTING REACTION BLOCKS. THE CONTRACTOR SHALL TAKE WHATEVER MEASURE NECESSARY TO PROTECT THE WATER LINES, SUCH AS CONSTRUCTING SPECIAL REACTION BLOCKS (WITH BWS APPROVAL) AND/OR MODIFYING HIS CONSTRUCTION METHOD.

10. THE EXISTENCE AND LOCATION OF UNDERGROUND UTILITIES AND STRUCTURES AS SHOWN ON THE PLANS ARE FROM THE LATEST AVAILABLE DATA BUT IS NOT GUARANTEED AS TO THE ACCURACY OR THE ENCOUNTERING OF OTHER OBSTACLES DURING THE COURSE OF THE WORK. THE CONTRACTOR SHALL BE RESPONSIBLE AND SHALL PAY FOR ALL DAMAGES TO EXISTING UTILITIES. THE CONTRACTOR SHALL NOT ASSUME THAT WHERE NO UTILITIES ARE SHOWN, THAT NONE EXIST.

11. PRIOR TO INSTALLATION, THE CONTRACTOR SHALL SUBMIT FOR APPROVAL BY BOARD OF WATER SUPPLY, THE MANUFACTURER'S CERTIFICATION THAT ALL CAST IRON (GRAY OR DUCTILE) FITTINGS FOR THE PROJECT CONFORM IN ALL RESPECTS TO THE WATER SYSTEM STANDARDS, DATED 2002.

12. POLYGON SHAPE FOR MECHANICAL JOINT GLANDS AS DESCRIBED IN AWWA STANDARD C111 SHALL BE "STRAIGHT-SIDED" OR AN APPROVED EQUAL ON A JOB-TO-JOB BASIS.

13. RE-APPROVAL SHALL BE REQUIRED IF THIS PROJECT IS NOT UNDER CONSTRUCTION WITHIN A PERIOD OF TWO YEARS.

14. CONTRACTOR SHALL CUT AND PLUG ALL EXISTING UNUSED LATERALS AT THE MAIN WHETHER OR NOT SHOWN ON THE PLANS. METER AND VALVE BOXES TO BE OR ALREADY ABANDONED SHALL BE DEMOLISHED OR REMOVED AND PROPERLY DISPOSED OF. THE DAMAGED AREA SHALL BE REPAIRED TO AN EQUAL OR BETTER CONDITION THAN THE IMMEDIATE AREA. ALL WORK SHALL BE DONE AT THE EXPENSE OF THE CONTRACTOR.

15. THE CONTRACTOR SHALL FURNISH AND INSTALL POLYETHYLENE WRAP, 3 FEET MINIMUM AT ALL TAPS (FOR DI PIPE AND COPPER LATERAL COMBINATION ONLY) AND PLASTIC PIPE (PE TUBING) 3 FEET LONG AFTER METERS FOR ALL SERVICE LATERAL CONNECTIONS.

16. ADEQUATE OFFSITE FIRE PROTECTION MEETING THE BWS STANDARD SHALL BE INSTALLED AND COMPLETED PRIOR TO CONSTRUCTION OF HOMES INCLUDING MODEL HOMES.

17. AT THE ELECTRICAL/SIGNAL DUCTLINE WATER CROSSINGS, ADJUST ALL ELECTRICAL/SIGNAL DUCTLINE ELEVATIONS TO MAINTAIN 6" VERTICAL CLEAR SEPARATION FROM ALL WATERLINES (12" CLEAR FOR ALL ELECTRICAL/SIGNAL DUCTLINE STRUCTURES LARGER THAN 16") AT NO COST TO THE BOARD OF WATER SUPPLY.

18. MAINTAIN 3'-0" MIN. HORIZONTAL CLEAR SEPARATION BETWEEN ALL WATERLINE SYSTEMS AND NEAREST ELECTRICAL/SIGNAL DUCTLINES PARALLELING THE WATER SYSTEM AT NO COST TO THE BOARD OF WATER SUPPLY.

19. MAINTAIN 3'-0" MIN. HORIZONTAL CLEAR SEPARATION BETWEEN STREET LIGHT/TRAFFIC SIGNAL STANDARDS (INCLUDING ANY MODULAR UNITS) AND THE NEAREST WATER SYSTEM. CONTRACTOR SHALL FIELD VERIFY FOR ANY CONFLICTS AT EACH STREET LIGHT/TRAFFIC SIGNAL STANDARD LOCATION. WHERE CONFLICTS OCCUR, THE CONTRACTOR SHALL COORDINATE WITH THE PROJECT ENGINEER TO REVISE THE STREET LIGHT/TRAFFIC SIGNAL STANDARD TO PROVIDE THE REQUIRED CLEARANCES AT NO COST TO THE BWS.

20. THE CONTRACTOR/DEVELOPER SHALL OBTAIN A NPDES PERMIT PRIOR TO CHLORINATION AND/OR DEWATERING. A COPY OF THE PERMIT SHALL BE SUBMITTED TO THE BOARD OF WATER SUPPLY, CAPITAL PROJECTS DIVISION, CONSTRUCTION SECTION.

21. PIPE CUSHION SHALL BE OF HIGH RESISTIVITY MATERIAL. THE CONTRACTOR SHALL SUBMIT A SOIL CERTIFICATION THAT HIGH RESISTANT CUSHION MATERIAL HAS A RESISTIVITY GREATER THAN 5,000 OHM-CM. REMAINDER OF THE BACKFILL MATERIAL SHALL BE AS SPECIFIED IN THE WATER SYSTEM STANDARDS. PIPE CUSHION AND BACKFILL MATERIAL SHALL CONTAIN NO HAZARDOUS SUBSTANCES ABOVE REGULATORY ACTION LEVELS INCLUDING BUT NOT LIMITED TO LEAD, ASBESTOS, MERCURY, CHROMIUM, CADMIUM, ZINC, STRONTIUM, AND POLYCHLORINATED BIPHENYLS (PBC).

22. BWS WILL NOT SEND COMPLETION NOTICES TO DPP SUBDIVISION BRANCH UNTIL EASEMENT DOCUMENTS ARE SUBMITTED TO BWS AND RECORDED.

23. UPON COMPLETION OF THE PROJECT, THE DEVELOPER SHALL PROVIDE THE BWS WITH A CERTIFICATE FROM A REGISTERED SOILS ENGINEER CERTIFYING THAT THE ROAD PRISM HAS BEEN CONSTRUCTED IN ACCORDANCE TO CITY AND COUNTY ROADS STANDARDS.

24. ALL DUCTILE IRON PIPE, FITTINGS AND VALVES SHALL BE WRAPPED WITH TWO LAYERS OF 8 MIL. POLYETHYLENE WRAP.

25. TWO-WAY BLUE REFLECTIVE HYDRANT MARKERS TYPE DB SHALL BE INSTALLED AT ALL NEW FIRE HYDRANT INSTALLATIONS. CONTRACTOR SHALL VERIFY THE EXACT LOCATIONS OF HYDRANT MARKERS WITH THE NEAREST HONOLULU FIRE DEPARTMENT BATTALION CHIEF.

26. CLEANING SHALL BE BY THE USE OF "PIGS" INTRODUCED INTO THE PIPELINE AND RUN COMPLETELY THROUGH ALL INSTALLED PIPELINES AND ALL BRANCH LINES FOR FIRE HYDRANTS. "PIGGING" OF SERVICE LATERALS IS NOT REQUIRED. BARE FOAM "PIGS" SHALL BE USED TO SWAB PIPING CLEAN AS EACH LENGTH OF THE PIPELINE IS INSTALLED. EACH "PIG" SHALL CONSIST OF A CYLINDRICAL PIECE OF POLYURETHANE FOAM WITH A DENSITY OF 3-7 POUNDS PER CUBIC FOOT AND A VINYL-COATED NOSE. OUTSIDE DIAMETER OF THE "PIG" SHALL BE EQUAL TO 1-1/4 TO 1-1/2 TIMES THE INSIDE DIAMETER OF THE PIPE BEING INSTALLED. THE LENGTH OF THE "PIG" SHALL BE 1-1/2 TO 2 TIMES ITS DIAMETER. PRIOR TO USE, THE "PIG" SHALL BE SUBMERGED IN A CHLORINE SOLUTION OF 1 OZ. OF 5%%% CHLORINE BLEACH IN 5 GALLONS OF WATER. "PIGGING" OF THE PIPELINE SHALL BE CONSIDERED INCIDENTAL TO THE INSTALLATION OF THE NEW PIPELINE.

27. ALL SECTIONS OF THE WATER MAIN REQUIRING REINFORCED CONCRETE JACKETING SHALL BE DUCTILE IRON PIPE OR CONCRETE CYLINDER PIPE AND FITTINGS.

28. BALL CORP AND BALL STOP SHALL BE USED IN LIEU OF A CORPORATION STOP AND STOPCOCK, RESPECTIVELY.

29. INSTALL 4 MIL. THICK, NON-METALLIC, BLUE COLORED, 6 INCHES WIDE WARNING TAPE OVER CENTERLINE OF THE PIPE AND BELOW THE BASE COURSE ALONG THE ENTIRE LENGTH OF TRENCH. TAPE SHOULD BE MARKED WITH "CAUTION WATER LINE BURIED BELOW".

30. THE CONTRACTOR SHALL INSTALL ELECTRONIC MARKERS TO ALL MAINS AND TEST THE ELECTRONIC MARKERS PRIOR TO INSTALLATIONS TO VERIFY PROPER OPERATION. BWS PERSONNEL SHALL VERIFY THE NUMBER AND LOCATIONS OF PLACED ELECTRONIC MARKERS BEFORE FINAL PAVING OF THE PROJECT.

31. WATER PIPELINE CHLORINATION AND TESTING PROCEDURES:

    A. THE FOLLOWING CHLORINATION AND WATER SAMPLE COLLECTION PROCEDURE SHALL APPLY TO ALL WATER PIPELINE PROJECTS:

    STEP 1: CHLORINATE MAIN BY FILLING WITH WATER AND INTRODUCING CHLORINE IN SUFFICIENT QUANTITY TO OBTAIN A MINIMUM CHLORINE CONCENTRATION OF 50 PARTS PER MILLION. LEAVE CHLORINATED WATER IN MAIN OVERNIGHT.

    STEP 2: FLUSH MAIN WITH FRESH WATER UNTIL ALL CHLORINE HAS BEEN FLUSHED OUT AS EVIDENCED BY THE ORTHO-TOLIDINE TEST, THEN COLLECT A WATER SAMPLE WHILE CONTINUING TO FLUSH THE MAIN.

    STEP 3: REPEAT STEPS 1 AND 2. AFTER COLLECTING THE SECOND WATER SAMPLE, STOP FLUSHING AND ALLOW THE WATER TO STAND IN THE MAIN OVERNIGHT.
    STEP 4: THOROUGHLY FLUSH THE MAIN WITH FRESH WATER UNTIL ALL WATER THAT HAD BEEN STANDING IN THE MAIN OVERNIGHT HAS BEEN FLUSHED OUT. STOP FLUSHING AND LET THE WATER STAND IN THE MAIN FOR ONE HOUR. COLLECT A WATER SAMPLE.

WATER NOTES (CONT.)

B. THE MAIN IS DEEMED ACCEPTABLE AND CERTIFIED WHEN (1) TWO CONSECUTIVE WATER SAMPLES, COLLECTED 24 HOURS APART UNDER STEPS 1 AND 2, SHOW NO TOTAL AND FECAL COLIFORM AND LESS THAN 200 COLONY FORMING UNITS (CFU) OF TOTAL BACTERIA AND (2) THE SAMPLE OF WATER HELD IN THE MAIN FOR ONE HOUR, COLLECTED UNDER STEP 4, ALSO SHOWS NO TOTAL AND FECAL COLIFORM AND LESS THAN 200 CFU OF TOTAL BACTERIA.

C. CHLORINATION, FLUSHING, SAMPLING AND TESTING WILL BE EXTENDED SHOULD UNSATISFACTORY RESULTS BE ENCOUNTERED. ANY SAMPLE THAT SHOWS POSITIVE COLIFORM PRESENCE OR TOTAL BACTERIA GREATER THAN 200 CFU IS UNSATISFACTORY.

D. STEPS 1 AND 2 MAY BE REPEATED BEFORE COLLECTING THE ONE-HOUR HOLD SAMPLE SPECIFIED IN STEP 4. REPEATING STEPS 1 AND 2 IS RECOMMENDED IN THE EVENT SAMPLES SHOW THE PRESENCE OF COLIFORMS AND/OR INCREASING TOTAL BACTERIAL RESULTS FROM ONE SAMPLE TO THE NEXT.

E. WATER SAMPLES THAT SHOW THE PRESENCE OF ATYPICAL COLONIES, DEBRIS OR RESULTS INCONSISTENT WITH EXISTING WATER ARE SUBJECT TO RECONFIRMATION. BWS RESERVES THE RIGHT TO REQUEST AND TEST ADDITIONAL WATER SAMPLES IN THE INTEREST OF SAFEGUARDING PUBLIC HEALTH AND SAFETY.

32. BOARD OF WATER SUPPLY APPROVAL OF THESE PLANS DOES NOT CONSTITUTE A WATER COMMITMENT. AVAILABILTY OF WATER WILL BE DETERMINED WHEN BUILDING PERMIT IS PRESENTED TO THE DEPARTMENT. WATER COMMITMENT WILL DEPEND UPON THE STATUS OF THE WATER SYSTEM AT THE TIME. SHOULD WATER SERVICE BE MADE AVAILABLE, THE WATER COMMITMENT WILL BE EFFECTIVE WHEN THE PROJECT RECEIVES AN APPROVED BUILDING PERMIT FROM THE BUILDING DEPARTMENT. ALL WATER COMMITMENTS WILL BE CANCELED IN THE EVENT THE BUILDING PERMIT IS CANCELED.

33. POLYVINYL CHLORIDE (PVC) PIPES SHALL BE CLASS 150 (DR=18). ALL DUCTILE IRON VALVES AND METALLIC FITTINGS SHALL BE WRAPPED WITH TWO LAYERS OF 8 MIL POLYETHELENE WRAP. NO BENDING OF POLYVINYL CHLORIDE PIPES SHALL BE PERMITTED. THE INSTALLATION OF PVC PIPE, ACCORDING TO THE PLANS AND SPECIFICATIONS AS BID ON BY THE CONTRACTOR, MAY REQUIRE ADDITIONAL DESIGN WORK, ADDITIONAL FITTINGS AND SPECIAL COUPLINGS SHALL BE CONSIDERED INCIDENTAL TO THE UNIT PRICE BID IN THE PROPOSAL FOR PVC PIPE. ANY ADDITIONAL DESIGN WORK SHALL BE THE RESPONSIBILTY OF THE CONTRACTOR.

34. ALL POLYVINYL CHLORIDE (PVC) PIPE DEFLECTIONS SHALL BE ACCOMPLISHED ONLY BY THE USE OF SPECIAL PVC DEFLECTION COUPLINGS. DEFLECTION AROUND CURVES SHALL BE ACCOMPLISHED ONLY BY THE USE OF PVC DEFLECTION COUPLINGS.

35. ALL SECTIONS OF THE WATER MAIN REQUIRING REINFORCED CONCRETE JACKETING SHALL BE DUCTILE IRON PIPE CLASS 52 WITH DUCTILE IRON FITTINGS OR CONCRETE CYLINDER PIPE AND FITTINGS.

36. BOSSED TEES REQUIRED FOR ALL LATERAL AND ARV CONNECTIONS TO PVC MAINS 12" AND SMALLER. DUCTILE IRON CONNECTOR PIECES TAPPED ARE REQUIRED FOR ALL LATERAL AND ARV CONNECTION TO PVC MAINS LARGER THAN 12".

37. ALL PVC FITTINGS SHALL CONFORM TO AMERICAN WATER WORKS ASSOCIATIONS (AWWA) C-907. DUCTILE IRON FITTINGS SHALL BE USED FOR ALL TYPES OF FITTINGS NOT SPECIFIED IN AWWA C-907.

38. REACTION BLOCK REQUIREMENTS FOR PVC FITTINGS SHALL BE THE SAME FOR DUCTILE IRON FITTINGS.

39. THE USE OF HUB CLAMPS AND SET SCREWS ON PVC FITTINGS IS NOT APPROVED.

40. PRIOR TO THE PVC FITTING INSTALLLATION, THE CONTRACTOR SHALL SUBMIT FOR APPROVAL BY THE BWS, THE MANUFACTURER'S CERTIFICATION THAT ALL PVC FITTINGS CONFORM TO AWWA C-907.

SPECIAL WATER NOTES

1. WATER METERS AND BOXES SHALL BE CLEAR OF DRIVEWAYS AND ELECTRICAL PULLBOXES.

2. THE CONTRACTOR SHALL INSTALL ELECTRONIC MARKERS TO ALL MAINS AND TEST THE ELECTRONIC MARKERS PRIOR TO INSTALLATIONS TO VERIFY PROPER OPERATION. BWS PERSONNEL SHALL VERIFY THE NUMBER AND LOCATIONS OF PLACED ELECTRONIC MARKERS BEFORE FINAL PAVING OF THE PROJECT.

3. FIBER OPTIC DUCTLINES SHALL BE INSTALLED AT A MINIMUM OF 5' HORIZONTAL CLEARANCE TO WATERLINES.
   WHERE 5' CLEARANCE IS NOT FEASIBLE, DUCTLINES SHALL BE AT LEAST 3' CLEAR, HORIZONTALLY, AND SHALL BE CONCRETE JACKETED, OR ENCASED AND GROUTED IN A CARRIER PIPE.
   WHERE 3' CLEARANCE IS NOT POSSIBLE, DUCTLINES SHALL BE INSTALLED TO PROVIDE AS MUCH HORIZONTAL CLEARANCE AS POSSIBLE, WITH THE FOLLOWING REQUIREMENTS:
   A. FOR OPEN TRENCH INSTALLATION, DUCTLINE SHALL BE CONCRETE JACKETED AND AT LEAST 18" BELOW THE WATERLINE.
   B. FOR DIRECTIONAL DRILLING, DUCTLINE SHALL BE ENCASED AND GROUTED AND SHALL BE AT LEAST 3' BELOW THE WATERLINE.

4. THE CONTRACTOR WILL PROVIDE ADEQUATE SUPPORT FOR THE WATERLINE WHEN THE INSTALLATION OF THE FIBER OPTIC LINE IS INSTALLED UNDER OUR MAIN. FIBER OPTIC LINES WILL BE ALLOWED TO CROSS UNDER A WATERLINE, ONLY ON A STRAIGHT PORTION OF PIPE, WITHOUT THE PRESENCE OF ANY BENDS OR SUPPORTS.

RECYCLED WATER SYSTEM

1. UNLESS OTHERWISE SPECIFIED, ALL MATERIALS AND CONSTRUCTION OF WATER SYSTEM FACILITIES AND APPURTENANCES SHALL BE IN ACCORDANCE WITH THE CITY AND COUNTY OF HONOLULU BOARD OF WATER SUPPLY'S "WATER SYSTEM STANDARDS", DATED 2002, THE "WATER SYSTEM EXTERNAL CORROSION CONTROL STANDARDS", VOLUME 3, DATED 1991, AND THE DEPARTMENT OF HEALTH "GUIDELINES FOR THE TREATMENT AND USE OF RECYCLED WATER" DATED MAY 15, 2002, AND ALL SUBSEQUENT AMENDMENTS AND ADDITIONS.

2. ALL PLANS APPROVED BY THE BOARD OF WATER SUPPLY ARE BASED SOLELY ON THE ADEQUACY OF THE WATER SUPPLY. ALL OTHER FEATURES OF THE WATER SYSTEM, SUCH AS LINES, GRADES, FITTINGS, DRAINAGE, ETC., AND OTHER FEATURES OF IMPROVEMENTS SHALL NOT BE THE RESPONSIBILITY OF THE BOARD OF WATER SUPPLY.

3. RE-APPROVAL SHALL BE REQUIRED IF THIS PROJECT IS NOT UNDER CONSTRUCTION WITHIN A PERIOD OF TWO YEARS.

4. TEST PRESSURE SHALL BE 150 PSI. DURING THE 30-MINUTE PRESSURE TEST, THE PRESSURE SHALL NOT DROP MORE THAN 10 PSI.

5. THE CONTRACTOR SHALL NOTIFY BWS CAPITAL PROJECTS DIVISION, CONSTRUCTION SECTION IN WRITING AND SUBMIT SIX (6) SETS OF APPROVED CONSTRUCTION PLANS ONE WEEK PRIOR TO COMMENCING WORK ON THE WATER SYSTEM.

6. THE EXISTENCE AND LOCATION OF UNDERGROUND UTILITIES AND STRUCTURES AS SHOWN ON THE PLANS ARE FROM THE LATEST AVAILABLE DATA BUT IS NOT GUARANTEED AS TO THE ACCURACY OR THE ENCOUNTERING OF OTHER OBSTACLES DURING THE COURSE OF THE WORK. THE CONTRACTOR SHALL BE RESPONSIBLE AND SHALL PAY FOR ALL DAMAGES TO EXISTING UTILITIES. THE CONTRACTOR SHALL NOT ASSUME THAT WHERE NO UTILITIES ARE SHOWN, THAT NONE EXIST.

7. PRIOR TO INSTALLATION, THE CONTRACTOR SHALL SUBMIT FOR APPROVAL BY BOARD OF WATER SUPPLY, THE MANUFACTURER'S CERTIFICATION THAT ALL CAST IRON (GRAY OR DUCTILE) FITTINGS FOR THE PROJECT CONFORM IN ALL RESPECTS TO THE WATER SYSTEM STANDARDS, DATED 2002.

8. THE CONTRACTOR SHALL BE RESPONSIBLE FOR THE PROTECTION OF ALL WATER LINES DURING CONSTRUCTION. THE CONTRACTOR SHALL BE ESPECIALLY CAREFUL WHEN EXCAVATING BEHIND WATER LINES, TEES AND BENDS WHEREVER THERE IS A POSSIBILITY OF WATER LINE MOVEMENT DUE TO THE REMOVAL OF THE SUPPORTING EARTH BEYOND THE EXISTING REACTION BLOCKS. THE CONTRACTOR SHALL TAKE WHATEVER MEASURE NECESSARY TO PROTECT THE WATER LINES, SUCH AS CONSTRUCTING SPECIAL REACTION BLOCKS (WITH BWS APPROVAL) AND/OR MODIFYING HIS CONSTRUCTION METHOD.

9. INTERCONNECTION BETWEEN RECYCLED WATER MAINS AND POTABLE MAINS SHALL NOT BE ALLOWED.

10. MATERIALS FOR FRAMES AND COVERS OF MANHOLES, VALVE BOXES, AND METER BOXES SHALL CONFORM TO THE REQUIREMENTS SPECIFIED IN THE WATER SYSTEM STANDARDS. THE RECYCLED WATER COVERS SHALL BE CAST WITH THE WORDS "RECYCLED WATER" AND SHALL BE PROVIDED WITH A 24-INCH LONG GALVANIZED STEEL COIL CHAIN, 3/16-INCH WITH 12.5 LINKS PER FOOT, AND BE WELDED TO THE FRAME AND COVER. IN LIEU OF THE CAST "RECYCLED WATER" MATERIALS MAY BE PAINTED PURPLE FOR IDENTIFICATION PURPOSES.

11. HORIZONTAL CLEARANCE OF 3-FEET AND VERTICAL CLEARANCE OF 6-INCHES SHALL BE MAINTAINED BETWEEN RECYCLED WATER AND OTHER LINES.

12. VALVE COVERS, MANHOLE COVERS, FIRE HYDRANTS, METER COVERS AND BODIES SHALL BE ALL PAINTED PURPLE (PANTONE 522 OR EQUAL) FOR IDENTIFICATION.

13. PVC C900 PIPE SHALL BE IN COMPLIANCE WITH AWWA C900, 4-INCH TO 12-INCH. ALL RECYCLED WATER C900 PVC MAINS SHALL BE MARKED ON OPPOSITE SIDES TO READ "CAUTION RECYCLED WATER – DO NOT DRINK" IN INTERVALS NOT GREATER THAN FIVE FEET. LETTERS SHALL BE A MINIMUM OF 3/4 INCHES HIGH. RECYCLED WATER C900 PVC MAINS MAY BE PURPLE IN COLOR.

14. PVC C905 PIPE SHALL BE IN COMPLIANCE WITH AWWA C905, 14-INCH TO 36-INCH. ALL RECYCLED WATER C905 PVC MAINS SHALL BE MARKED ON OPPOSITE SIDES TO READ "CAUTION RECYCLED WATER – DO NOT DRINK" IN INTERVALS NOT GREATER THAN FIVE FEET. LETTERS SHALL BE A MINIMUM OF 3/4 INCHES HIGH. RECYCLED WATER C905 PVC MAINS MAY BE PURPLE IN COLOR.

RECYCLED WATER SYSTEM (CONT.)

15. PRIOR TO ANY EXCAVATING, THE CONTRACTOR SHALL VERIFY IN THE FIELD THE LOCATION OF EXISTING WATER MAINS AND APPURTENANCES.

16. AT THE ELECTRICAL/SIGNAL DUCTLINE WATER CROSSINGS, ADJUST ALL ELECTRICAL/SIGNAL DUCTLINE ELEVATIONS TO MAINTAIN 6" VERTICAL CLEAR SEPARATION FROM ALL WATERLINES (12" CLEAR FOR ALL ELECTRICAL/SIGNAL DUCTLINE STRUCTURES LARGER THAN 16") AT NO COST TO THE BOARD OF WATER SUPPLY.

17. MAINTAIN 3'-0" MIN. HORIZONTAL CLEAR SEPARATION BETWEEN ALL WATERLINE SYSTEMS AND NEAREST ELECTRICAL/SIGNAL DUCTLINES PARALLELING THE WATER SYSTEM AT NO COST TO THE BOARD OF WATER SUPPLY.

18. MAINTAIN 3'-0" MIN. HORIZONTAL CLEAR SEPARATION BETWEEN STREET LIGHT/TRAFFIC SIGNAL, STANDARDS (INCLUDING ANY MODULAR UNITS) AND THE NEAREST WATER SYSTEM. CONTRACTOR SHALL FIELD VERIFY FOR ANY CONFLICTS AT EACH STREET LIGHT/TRAFFIC SIGNAL STANDARD LOCATION. WHERE CONFLICTS OCCUR, THE CONTRACTOR SHALL COORDINATE WITH THE PROJECT ENGINEER TO REVISE THE STREET LIGHT/TRAFFIC SIGNAL STANDARD TO PROVIDE THE REQUIRED CLEARANCES AT NO COST TO THE BWS.

19. THE CONTRACTOR SHALL COORDINATE THE SECURING OF THE EXISTING WATER SYSTEM WITH THE BWS PRIOR TO EXCAVATING BEHIND OR REMOVING ANY EXISTING THRUST BLOCKS. STRUCTURAL STRUTS OR REACTION BEAMS, OR ANY FITTINGS SUCH AS TEES, PLUGS, CAPS, BENDS, OFFSETS, AND VALVES, OR ANY OTHER PIPELINE APPURTENANCE. THE CONTRACTOR SHALL BE RESPONSIBLE FOR ALL ASSOCIATED DAMAGES RESULTING FROM FAILURE TO ADEQUATELY SECURE THE EXISTING SYSTEM.

20. HORIZONTAL AND VERTICAL CLEARANCES BETWEEN POTABLE WATER AND OTHER UTILITIES, NAMELY RECYCLED WATER LINES SHALL CONFORM WITH THE "WATER SYSTEM STANDARDS" DEPARTMENT OF WATER, COUNTY OF KAUAI; BOARD OF WATER SUPPLY, CITY AND COUNTY OF HONOLULU; DEPARTMENT OF WATER SUPPLY, COUNTY OF MAUI; DEPARTMENT OF WATER SUPPLY, COUNTY OF HAWAII; VOLUME 1 [26]. FURTHERMORE, THE MINIMUM EASEMENT OR RIGHT-OF-WAY WIDTHS, AND MINIMUM COVER AND REQUIREMENTS FOR NON-POTABLE SHALL ALSO CONFORM TO THIS REFERENCE.

21. ALL NEW BURIED TRANSMISSION PIPING IN THE RECYCLED WATER SYSTEM, INCLUDING SERVICE LINES, VALVES, AND OTHER APPURTENANCES SHALL BOTH BE COLORED PURPLE, SUGGESTED COLOR PANTONE 522 OR EQUAL, AND EMBOSSED OR BE INTEGRALLY STAMPED/MARKED "CAUTION: RECYCLED WATER–DO NOT DRINK," OR BE INSTALLED WITH A PURPLE IDENTIFICATION TAPE, OR A PURPLE POLYETHYLENE WRAP, SUGGESTED COLOR INDEX 77742 VIOLET #16, PANTONE 512 OR EQUAL.

22. IDENTIFICATION TAPE SHALL BE PREPARED WITH WHITE OR BLACK PRINTING ON A PURPLE FIELD, SUGGESTED COLOR INDEX 77742 VIOLET #16, PANTONE 512 OR EQUAL, HAVING THE WORDS "CAUTION: RECYCLED WATER – DO NOT DRINK." THE OVERALL WIDTH OF THE TAPE SHALL BE AT LEAST THREE (3) INCHES. IDENTIFICATION TAPES SHALL BE INSTALLED ON TOP OF NEW TRANSMISSION PIPE LONGITUDINALLY AND SHALL BE CENTERED. THE IDENTIFICATION SHALL BE CONTINUOUS IN THEIR COVERAGE ON THE PIPE AND SHALL BE FASTENED TO EACH PIPE LENGTH NO MORE THAN TEN FEET APART. TAPE ATTACHED TO SECTIONS OF PIPE BEFORE THEY ARE PLACED IN THE TRENCH SHALL HAVE FLAPS SUFFICIENT FOR CONTINUOUS COVERAGE. OTHER SATISFACTORY MEANS OF SECURING THE TAPE DURING BACKFILL OF THE TRENCH MAY BE USED IF SUITABLE FOR THE WORK, AS DETERMINED BY THE RECLAMATION AGENCY.

23. VALVE BOXES AND COVERS SHALL CONFORM TO THE DEPARTMENT OF HEALTH "GUIDELINES FOR THE TREATMENT AND USE OF RECYCLED WATER", REVISED 2002, OR AS APPROVED BY THE DEPARTMENT OF HEALTH. ALL VALVE COVERS ON OFFSITE RECLAMATION TRANSMISSION WATER LINES SHALL BE OF NON-INTERCHANGEABLE SHAPE WITH POTABLE WATER COVERS AND WITH A RECOGNIZABLE INSCRIPTION CAST ON THE TOP SURFACE "RECYCLED WATER".

24. ALL ABOVE GROUND EXISTING AND NEW FACILITIES SHALL BE CONSISTENTLY COLOR CODED PURPLE, SUGGESTED COLOR INDEX 77742 VIOLET #16, PANTONE 512, OR EQUAL AND MARKED TO DIFFERENTIATE RECYCLED WATER APPURTENANCES FROM POTABLE WATER OR WASTEWATER.

25. EITHER AN IN-LINE TYPE OR END-OF-LINE TYPE DRAIN (BLOW-OFF) ASSEMBLY SHALL BE INSTALLED FOR REMOVING WATER OR SEDIMENT FROM THE PIPE. THE LINE TAP FOR THE ASSEMBLY SHALL BE NO CLOSER THAN 18-INCHES TO A VALVE, COUPLING, JOINT, OR FITTING UNLESS IT IS AT THE END OF THE LINE. SINCE THERE ARE RESTRICTIONS ON RUNOFF AND PONDING AND THERE MAY BE RESTRICTIONS ON INFILTRATION, THE METHOD FOR DISPOSAL OF THE DRAIN WATER SHALL BE PRESENTED TO THE DEPARTMENT OF HEALTH FOR APPROVAL.

NPDES REQUIREMENTS FOR PERMIT PROJECTS WITHIN STATE HIGHWAY RIGHT-OF-WAY

THE CONTRACTOR SHALL OBTAIN AND COMPLY WITH THE "NATIONAL POLLUTANT DISCHARGE ELIMINATION SYSTEM (NPDES) REQUIREMENTS FOR OAHU DISTRICT PERMIT PROJECTS." THIS IS AVAILABLE AT THE OAHU DISTRICT OFFICE AT 727 KAKOI STREET (PH. 831-6793). DUE TO POTENTIAL COST IMPACTS, THE CONTRACTOR NEEDS TO BE AWARE OF THESE REQUIREMENTS.

THE CONTRACTOR SHALL COMPLETE AND SUBMIT A "CONTRACTOR'S CERTIFICATE OF NPDES COMPLIANCE," INCLUDING COMPLETION OF THE "BEST MANAGEMENT PRACTICE (BMP) CHECKLIST" AND SUBMITTAL OF A WRITTEN BMP PLAN AND DRAWINGS, PRIOR TO ISSUANCE OF THE PERMIT TO PERFORM WORK UPON STATE HIGHWAYS.

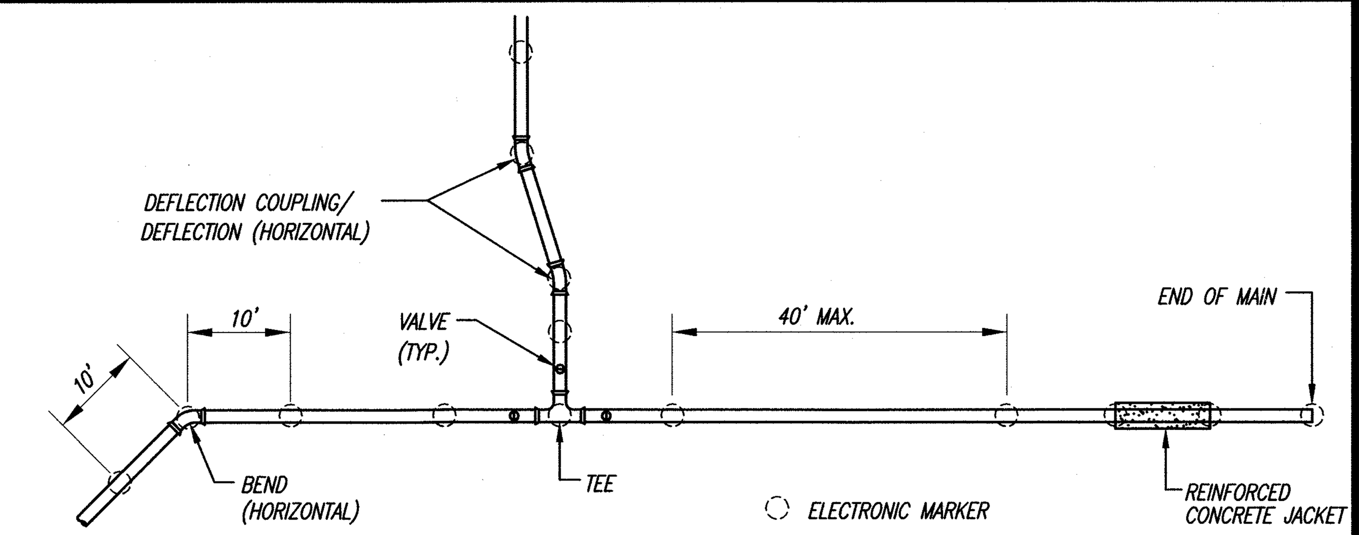

PLAN VIEW

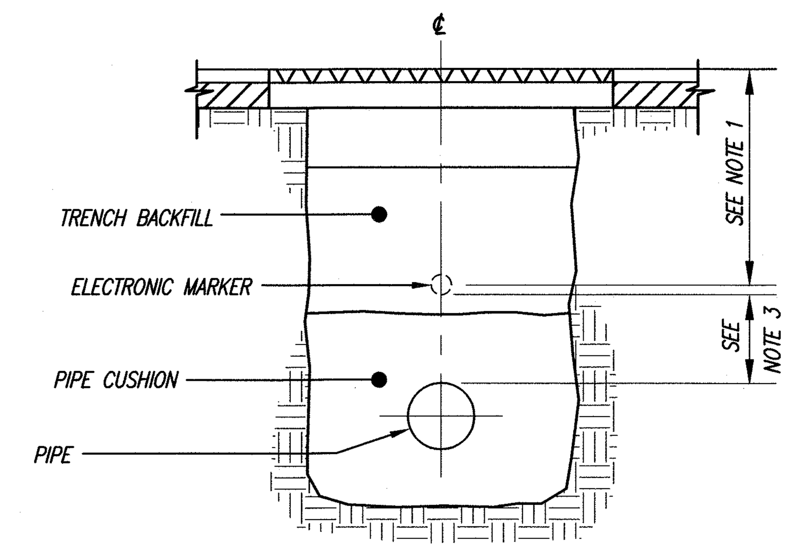

NOTES:
1. INSTALL ELECTRONIC MARKER OVER CENTERLINE OF PIPE AT A MINIMUM DEPTH OF 2 FEET AND A MAXIMUM DEPTH OF 3 FEET FROM FINISH GRADE.
2. INSTALL TRENCH BACKFILL AND PIPE CUSHION MATERIAL IN ACCORDANCE TO THE PLANS AND SPECIFICATIONS.
3. INSTALL ELECTRONIC MARKER AT A MINIMUM CLEARANCE OF 6-INCHES, WHERE POSSIBLE. INSTALL MARKERS ON OR ABOVE CONCRETE JACKETS.

SECTION VIEW

TYPICAL ELECTRONIC MARKER INSTALLATION

NOT TO SCALE

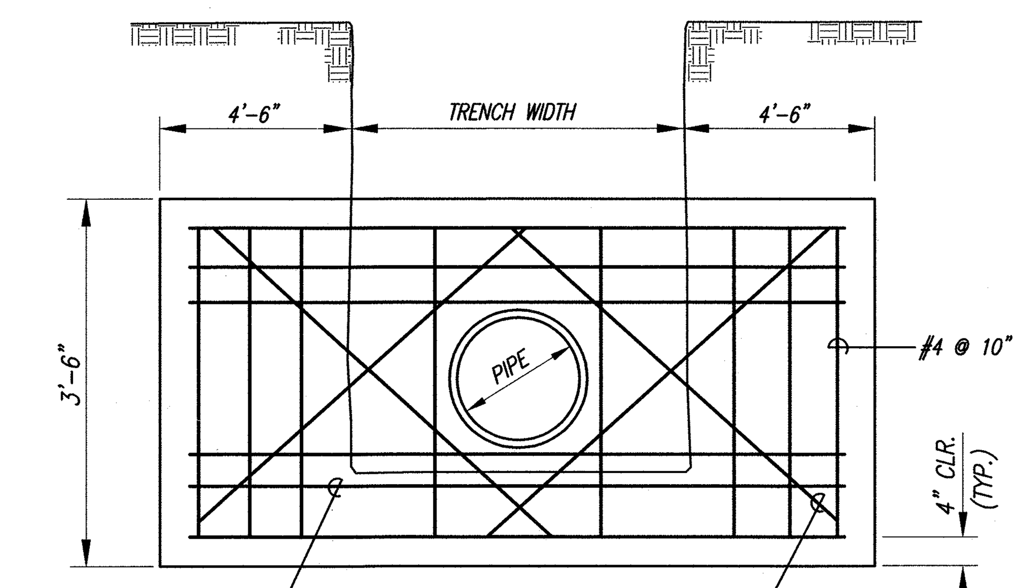

ELEVATION

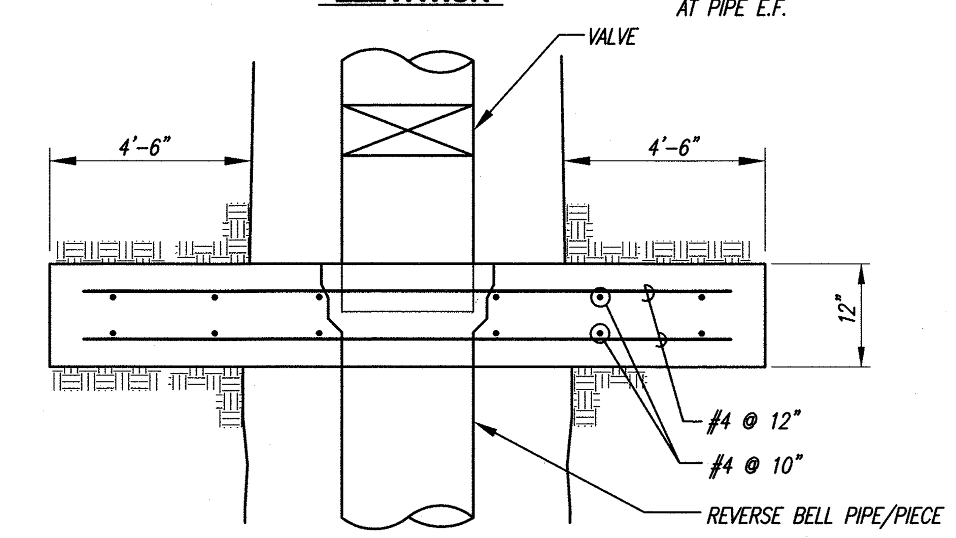

PLAN

CONCRETE THRUST BEAM

NOT TO SCALE

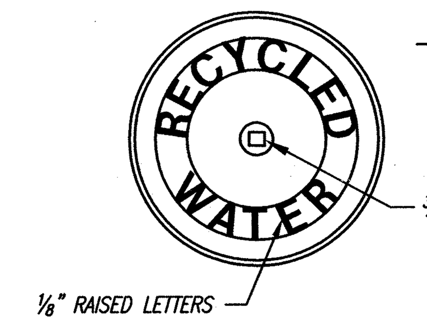

NOTE:
ALL MANHOLE AND VALVE BOX COVERS SHALL BE PAINTED PURPLE, COLOR INDEX 77742 VIOLET #16, PANTONE 522 OR EQUAL.

12" VALVE BOX COVER

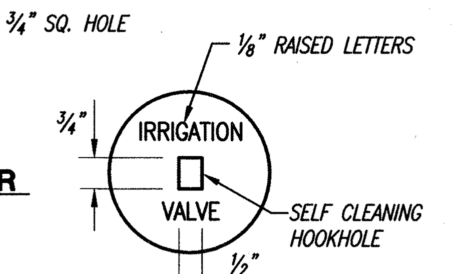

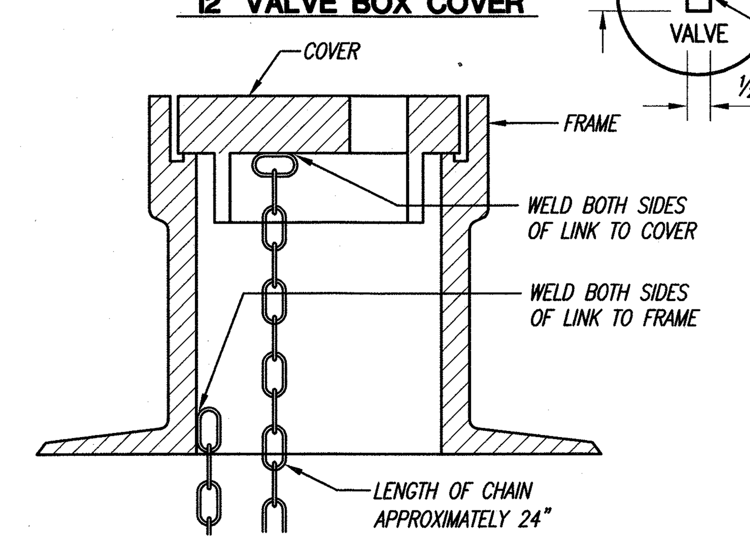

MODIFIED VALVE BOX COVER DETAILS

NOT TO SCALE

ANSON M. MURAYAMA
LICENSED PROFESSIONAL ENGINEER
No. 6975-C
HAWAII, U.S.A.

THIS WORK WAS PREPARED BY ME OR UNDER MY SUPERVISION. CONSTRUCTION OF THIS PROJECT WILL BE UNDER MY OBSERVATION. LICENSE EXPIRATION DATE: 04/30/12

REVISION DATE	DESCRIPTION	MADE BY	APPROVED

cp&e Community Planning and Engineering, Inc.
Engineering Design | Construction Management | Infrastructure Planning
1100 Alakea Street, Sixth Floor Honolulu, Hawaii

EAST KAPOLEI II DEVELOPMENT ROAD "E"

HONOULIULI, EWA, OAHU, HAWAII
(DPP SUBD. FILE NO. 2010/SUB-115)
OWNER: DEPARTMENT OF LAND AND NATURAL RESOURCES
DEVELOPER: DEPARTMENT OF HAWAIIAN HOME LANDS
TAX MAP KEY: 9-1-17: Portion 110

GENERAL NOTES - 2

DRAWN BY: LYLT	ENGINEER: SS, FJC	CHECKED BY: AMM

APPROVED:

for 1-27-2012
MANAGER AND CHIEF ENGINEER, B.W.S. DD DATE
CITY & COUNTY OF HONOLULU
(FOR WORK AFFECTING BWS FACILITIES IN CITY/STATE RIGHT-OF-WAY AND BWS EASEMENTS ONLY)

FILE	POCKET	FOLDER	NO.

P:\Land Projects\DHHL East Kapolei II\Road E\Construction Drawings\Government Review #4\03 GENERAL NOTES - 2_GR#4dwg.dwg, 3 GENERAL NOTES-2, 12/22/2011 2:49:08 PM, 1:1