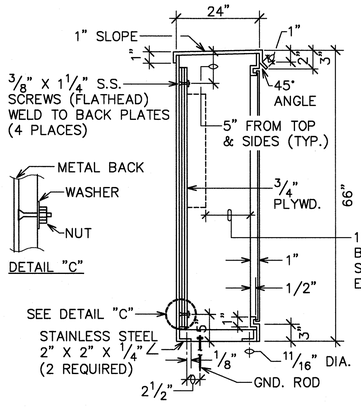

SECTION "A"

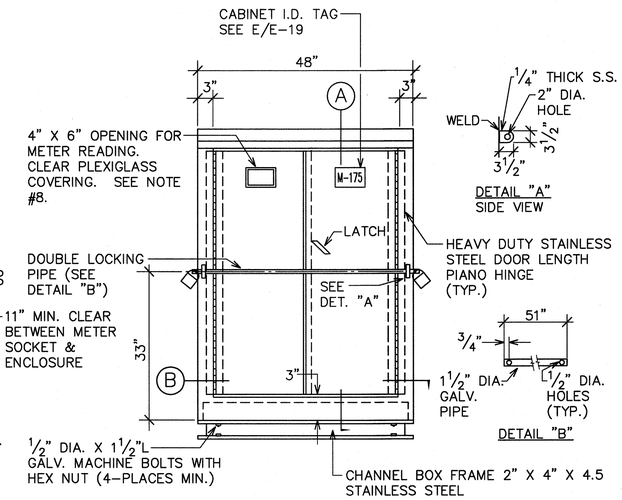

ELEVATION

NOTES:

1. CABINET TO BE PRIMED WITH ONE COAT SHOP PRIMER.
2. PLYWOOD TO BE 3/4" THICK (MIN.) TERMITE TREATED PLYWOOD. (EXTERIOR GRADE)
3. MADE FROM 10 GAUGE TYPE 316 STAINLESS SHEEL.
4. PROVIDE ACRYLIC ENAMEL FINISH, COLOR TO MATCH TRANS-FORMER. (2 COATS)
5. ENCLOSURE SHALL BE NEMA 3R WITH NEOPRENE GASKETING.
6. PADLOCKS:
   1 – HECO FURNISHED
   1 – CONTRACTOR FURNISHED, BRASS CORBIN SESAMEE COMBINATION
7. SHOP FABRICATION DRAWINGS SHALL BE SUBMITTED FOR APPROVAL.
8. LOCATION OF OPENING FOR METER READER TO CORRESPOND WITH LOCATION OF METER (CENTER OPENING WITH METER SOCKET).
9. MAINTAIN 4'-0" MIN. CLEARANCE FRONTING CABINET DOOR, UNLESS INDICATED OTHERWISE.

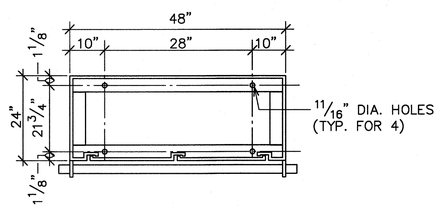

SECTION "B"
(STAINLESS STEEL ANGLE FRAME)

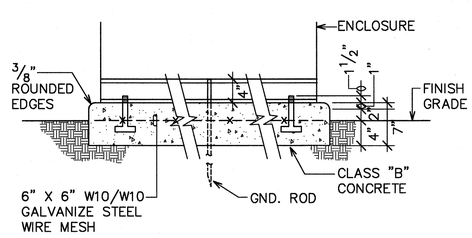

FRONT

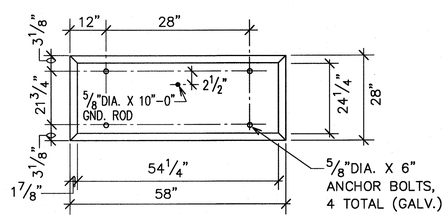

PLAN

CONCRETE PAD

A/E-15 METERING EQUIPMENT CABINET
NOT TO SCALE

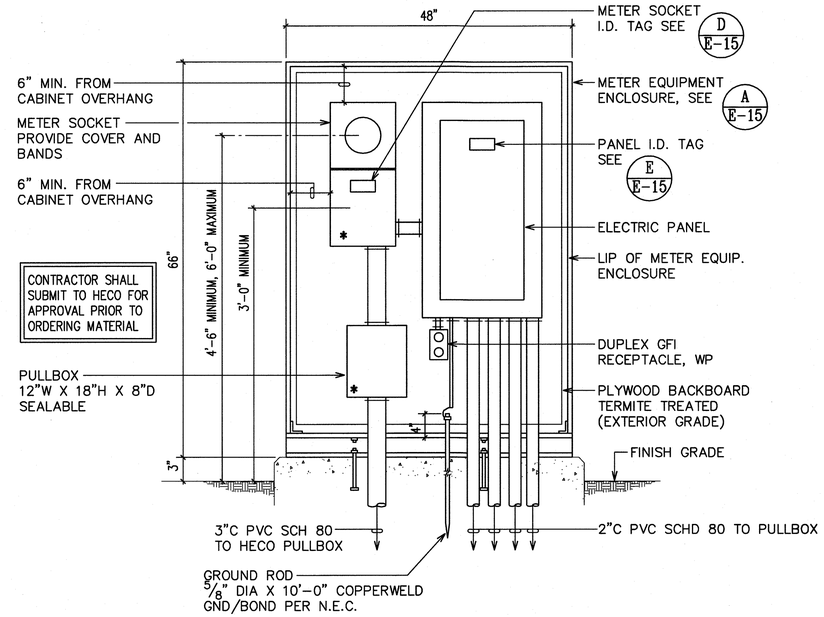

SEE THIS SHEET FOR ONE-LINE DIAGRAM

NOTE: "*" DENOTES PROVISIONS FOR HECO SEALS.

B/E-15 ELECTRICAL METERING EQUIPMENT ELEVATION
NOT TO SCALE

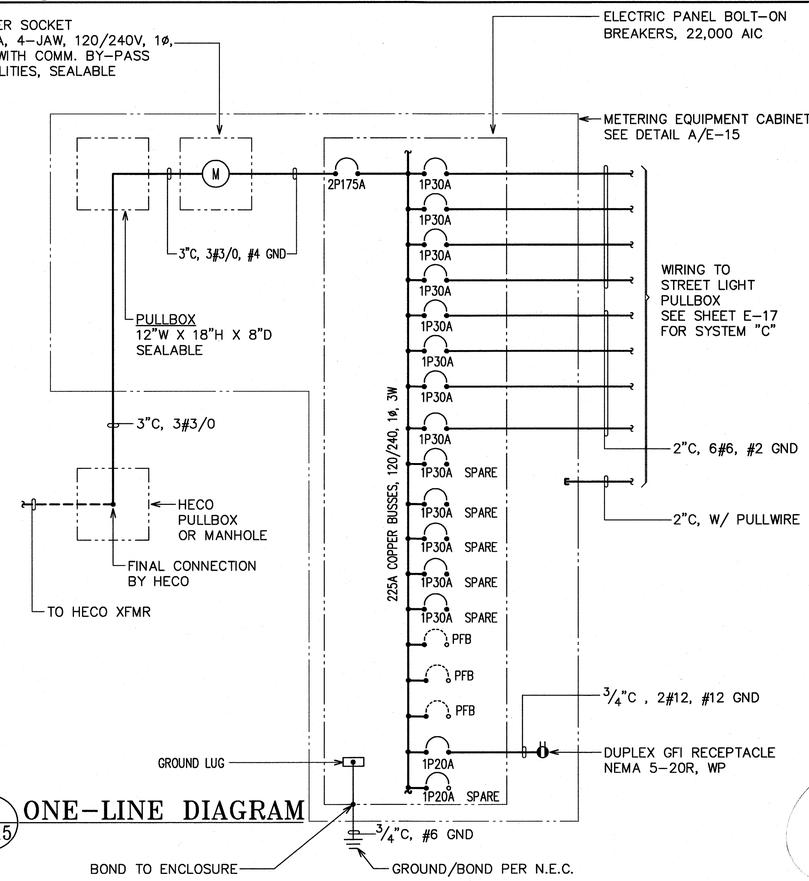

C/E-15 ONE-LINE DIAGRAM

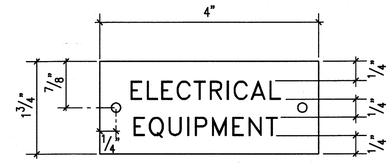

NOTES:

1. USE 2 PLY PLASTIC – BLACK, WHITE.
2. LETTER SIZE SHALL BE 1/2" HIGH AND ENGRAVED 1/16" WIDE, WHITE IN COLOR.
3. ATTACH TO EQUIPMENT ENCLOSURE WITH NO.7 STAINLESS STEEL DRIVE SCREWS.
4. CABINET I.D. TAG: CITY ST. LT. CABINET NUMBER. METER SOCKET: "STREET LIGHTS".

D/E-15 ELEC EQUIP I.D. TAG
NOT TO SCALE

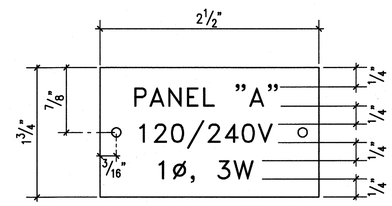

NOTES:

1. USE 2 PLY PLASTIC – BLACK, WHITE.
2. LETTER SIZE SHALL BE 1/2" HIGH AND ENGRAVED 1/16" WIDE, WHITE IN COLOR.
3. ATTACH TO EQUIPMENT ENCLOSURE WITH NO.7 STAINLESS STEEL DRIVE SCREWS.

E/E-15 TYP PANEL I.D. TAG DETAIL
NOT TO SCALE

REVISION DATE	DESCRIPTION	MADE BY	APPROVED

Community Planning and Engineering, Inc.
Engineering Design | Construction Management | Infrastructure Planning
1100 Alakea Street, Sixth Floor, Honolulu, Hawaii

EAST KAPOLEI II DEVELOPMENT ROAD "E"
HONOULIULI, EWA, OAHU, HAWAII
(DPP SUBD. FILE NO. 2010/SUB-115)
OWNER: DEPARTMENT OF LAND AND NATURAL RESOURCES
DEVELOPER: DEPARTMENT OF HAWAIIAN HOME LANDS
TAX MAP KEY: 9-1-17: Portion 110

METERING EQUIPMENT CABINET & DETAILS

DRAWN BY: | ENGINEER: GF | CHECKED BY: GF

APPROVED:
DATE — CHIEF, TRAFFIC REVIEW BRANCH, D.P.P. — DATE
DATE — CHIEF, MECHANICAL/ELECTRICAL DIVISION, D.D.C. — DATE 5/12/2011

GARY I. FUNASAKI LICENSED PROFESSIONAL ENGINEER No. 4195-E HAWAII, U.S.A.
5 MAY 2011
THIS WORK WAS PREPARED BY ME OR UNDER MY SUPERVISION. CONSTRUCTION OF THIS PROJECT WILL BE UNDER MY OBSERVATION. LICENSE EXPIRATION DATE: 04/30/12

DWG. NO. E-15 SHEET 47 OF 61 SHEETS

FILE	POCKET	FOLDER	NO.

LAST SAVE: 03/27/11 @ 09:56:30 BY: RH PLOT SZ: 1'-0"=1'
Z:\AUA\PROJECTS\2008401\E15_2008401_SLU-Dwg0a