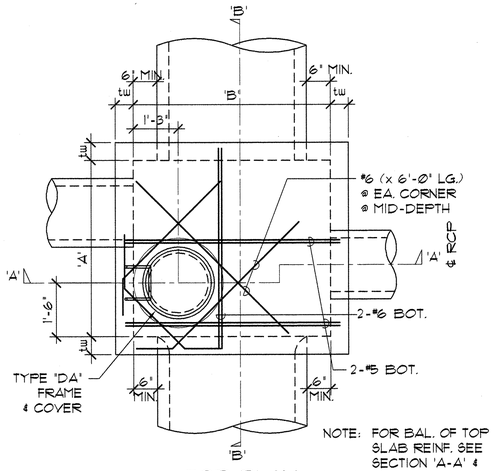

TOP PLAN

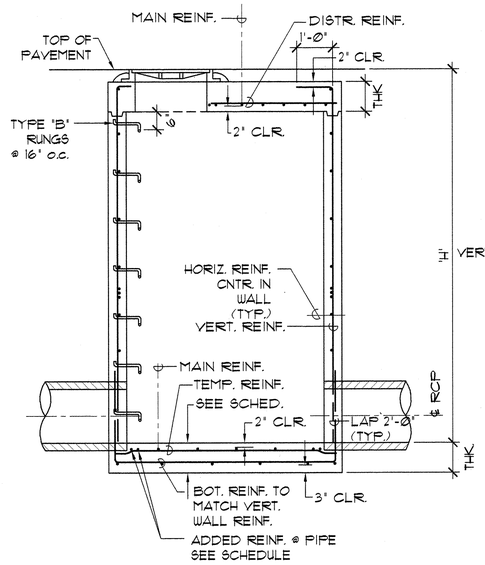

SECTION 'A-A'

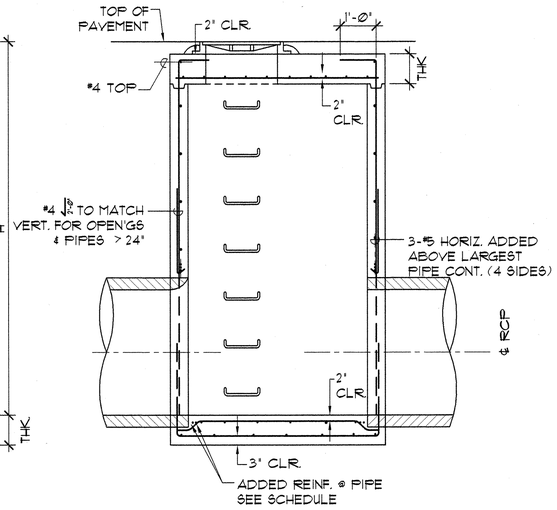

SECTION 'B-B'

SPECIAL DRAIN MANHOLE CAST-IN-PLACE DETAIL

SC: 1/2"=1'-0"

A S-2

SLAB REINFORCING SCHEDULE

SDMH

MARK	"H" MAX.	"A"	"B"	tw	THK.	TOP SLAB REINF. TOP MAIN	TOP SLAB REINF. REINF. DISTRIB.	INVERT SLAB REINF. THK.	INVERT SLAB REINF. MAIN	INVERT SLAB REINF. TEMP.
A-2 *	9.19'	4'-0"	6'-6"	8"	10"	#5@6"o.c.	#5@10"o.c.	12"	#4@9"o.c.	#4@9"o.c.
A-4	7.13'	4'-0"	4'-8"	8"	12"	6@6"o.c.	#5@8"o.c.	10"	#4@10"o.c.	#4@10"o.c.
B-1 *	11.76'	4'-0"	7'-0"	8"	10"	#5@6"o.c.	#5@10"o.c.	14"	#5@12"o.c.	#5@12"o.c.
E-4, E-6	8.9'	5'-3"	5'-3"	8"	12"	6@6"o.c.	#5@8"o.c.	10"	#4@10"o.c.	#4@10"o.c.
E-7	14.48'	6'-6"	7'-0"	8"	12"	#6@7"o.c.	#5@10"o.c.	12"	#4@9"o.c.	#4@9"o.c.
E-8	11.59'	4'-0"	6'-6"	8"	10"	#5@6"o.c.	#5@10"o.c.	14"	#5@12"o.c.	#5@12"o.c.
E-10	9.2'	5'-10"	6'-6"	8"	12"	#6@7"o.c.	#5@10"o.c.	10"	#4@10"o.c.	#4@10"o.c.

* CONSTRUCT WITHOUT TOP SLAB.

WALL REINFORCING SCHEDULE

MARK	A-2, E-8, E-10	A-4	B-1	E4, E-6	E-7	MARK
tw	8"	8"	8"	8"	8"	tw
VERT. REINF.	#4@12"o.c.	#4@12"o.c.	#4@12"o.c.	#4@12"o.c.	#4@12"o.c.	VERT. REINF.
"H"	HORIZ. REINF. (CENTERED IN WALL)					"H"
0'-0" TO 2'-0"	#5@10"o.c.	#4@9"o.c.	5@8"o.c.	#5@12"o.c.	#5@9"o.c.	0'-0" TO 2'-0"
2'-0" TO 3'-0"	#5@8"o.c.	↓	↓	#5@8"o.c.	#5@6"o.c.	2'-0" TO 3'-0"
3'-0" TO 4'-0"	↓	↓	↓	↓	↓	3'-0" TO 4'-0"
4'-0" TO 5'-0"	↓	↓	↓	↓	↓	4'-0" TO 5'-0"
5'-0" TO 6'-0"	#5@7"o.c.	↓	#5@6"o.c.	↓	↓	5'-0" TO 6'-0"
6'-0" TO 7'-0"	↓	↓	↓	↓	↓	6'-0" TO 7'-0"
7'-0" TO 8'-0"	↓	↓	↓	↓	↓	7'-0" TO 8'-0"
8'-0" TO 9'-0"	↓		↓		#5@4"o.c.	8'-0" TO 9'-0"
> 9'-0"	#5@6"o.c.		↓		↓	> 9'-0"

ADDED REINF. @ PIPE	
PIPE SIZE	REINF.
36"ϕ	1-#5
42"ϕ	2-#5
48"ϕ	2-#5
54"ϕ	2-#5
60"ϕ	2-#5

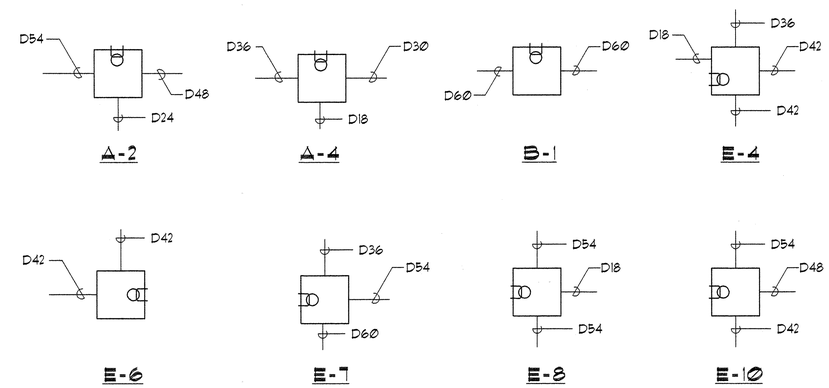

SCHEMATIC PLAN

N.T.S.

C S-2

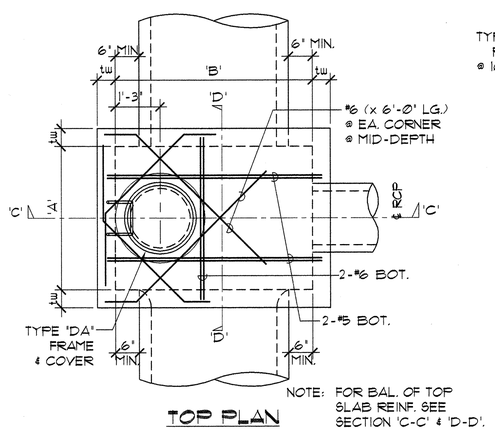

TOP PLAN

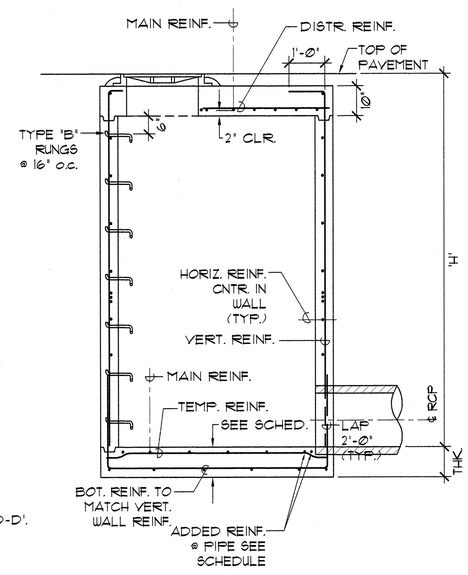

SECTION 'C-C'

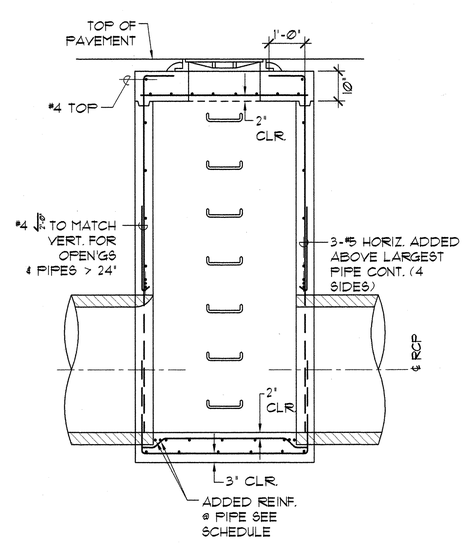

SECTION 'D-D'

SPECIAL DRAIN MANHOLE CAST-IN-PLACE DETAIL

SC: 1/2"=1'-0"

B S-2

THOMAS Y. TANIMURA
LICENSED PROFESSIONAL ENGINEER
No. 4926-S
HAWAII, U.S.A.

04/30/12
Expiration Date of the License

THIS WORK WAS PREPARED BY ME OR UNDER MY SUPERVISION AND CONSTRUCTION OF THIS PROJECT WILL BE UNDER MY OBSERVATION.

REVISION DATE	DESCRIPTION	MADE BY	APPROVED

cp&e Community Planning and Engineering, Inc.
Engineering Design | Construction Management | Infrastructure Planning
1100 Alakea Street, Sixth Floor Honolulu, Hawaii

EAST KAPOLEI II DEVELOPMENT ROAD "E"

HONOULIULI, EWA, OAHU, HAWAII
(DPP SUBD. FILE NO. 2010/SUB-115)
OWNER: DEPARTMENT OF LAND AND NATURAL RESOURCES
DEVELOPER: DEPARTMENT OF HAWAIIAN HOME LANDS
TAX MAP KEY: 9-1-17: PORTION 110

SPECIAL DRAIN MANHOLE CAST-IN-PLACE DETAILS

DRAWN BY: HM	ENGINEER: TT	CHECKED BY: TT

APPROVED:

1/24/12
CHIEF, CIVIL ENGINEERING BRANCH, D.P. DATE

FILE	POCKET	FOLDER	NO.

DWG. NO. **S-2** SHEET 26 OF 61 SHEETS