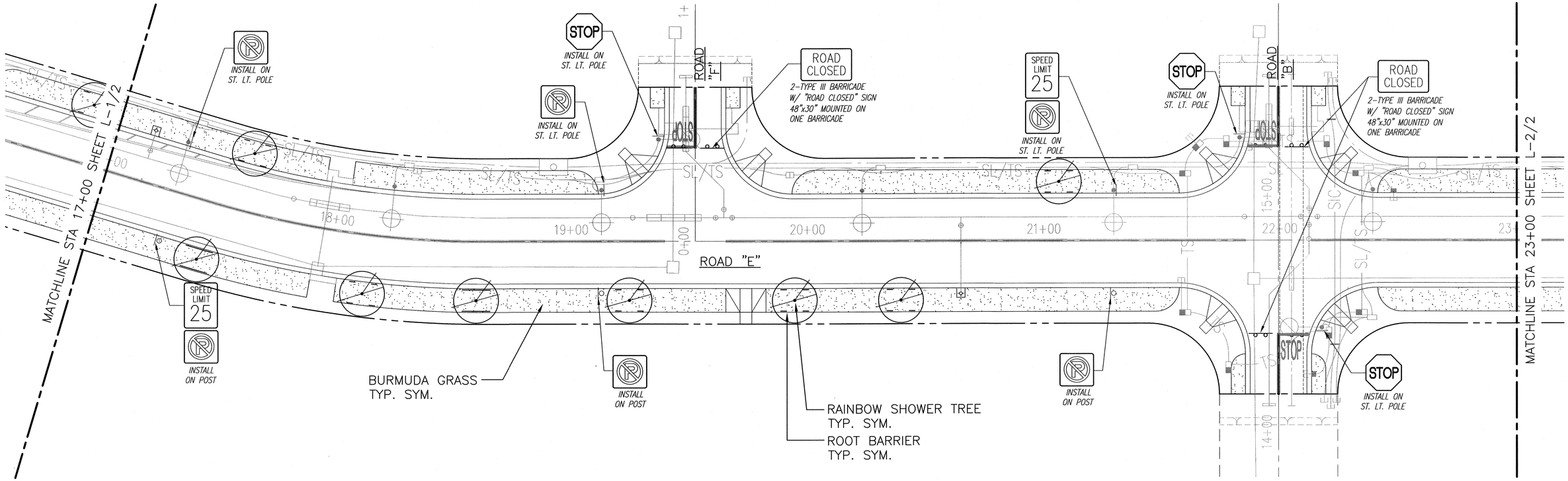

1 ROAD E LANDSCAPE PLAN

SCALE: 1"=20'-0"

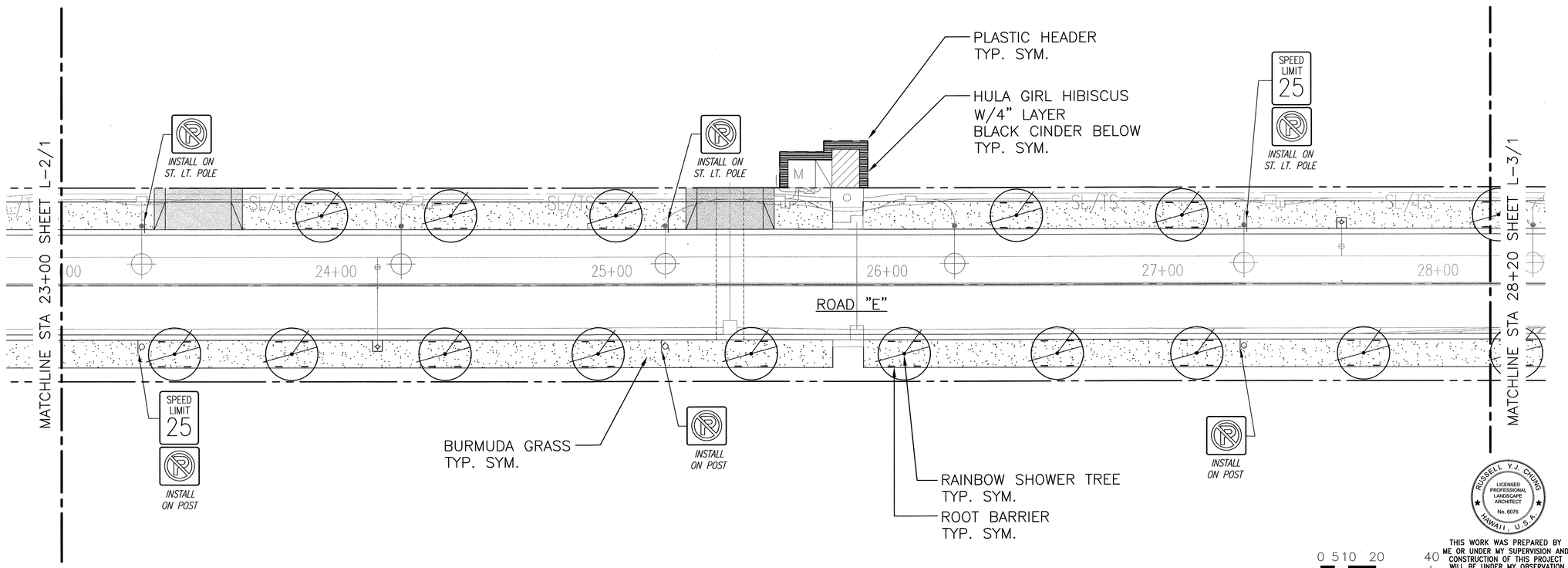

2 ROAD E LANDSCAPE PLAN

SCALE: 1"=20'-0"

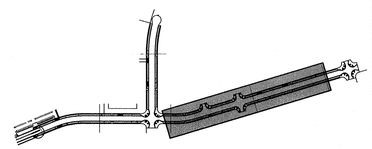

REVISION DATE	DESCRIPTION	MADE BY	APPROVED

Community Planning and Engineering, Inc.
Engineering Design | Construction Management | Infrastructure Planning
1100 Alakea Street, Sixth Floor Honolulu, Hawaii

EAST KAPOLEI II DEVELOPMENT ROAD "E"

HONOULIULI, EWA, OAHU, HAWAII
(DPP SUBD. FILE NO. 2010/SUB-115)
OWNER: DEPARTMENT OF LAND AND NATURAL RESOURCES
DEVELOPER: DEPARTMENT OF HAWAIIAN HOME LANDS
TAX MAP KEY: 9-1-17: Portion 110

LANDSCAPE PLAN

RUSSELL Y.J. CHUNG
LICENSED PROFESSIONAL LANDSCAPE ARCHITECT
No. 6076
HAWAII, U.S.A.

THIS WORK WAS PREPARED BY ME OR UNDER MY SUPERVISION AND CONSTRUCTION OF THIS PROJECT WILL BE UNDER MY OBSERVATION

4/30/12

0 5 10 20 40
SCALE: 1"=20'

DRAWN BY: CB	ENGINEER: RC	CHECKED BY: RH

APPROVED:

CHIEF, URBAN DESIGN BRANCH D.P.P. DATE

DWG. NO. L-2

SHEET 58 OF 61 SHEETS

FILE	POCKET	FOLDER	NO.