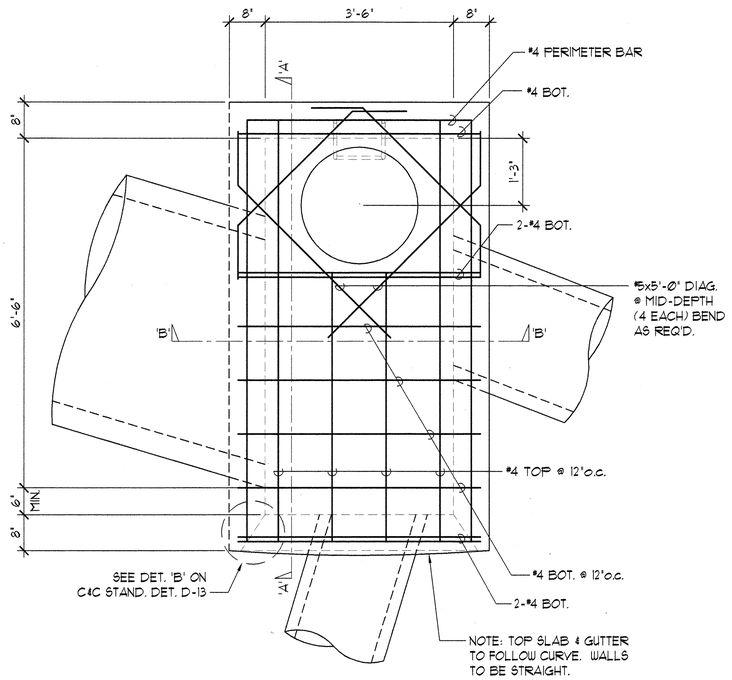

PLAN

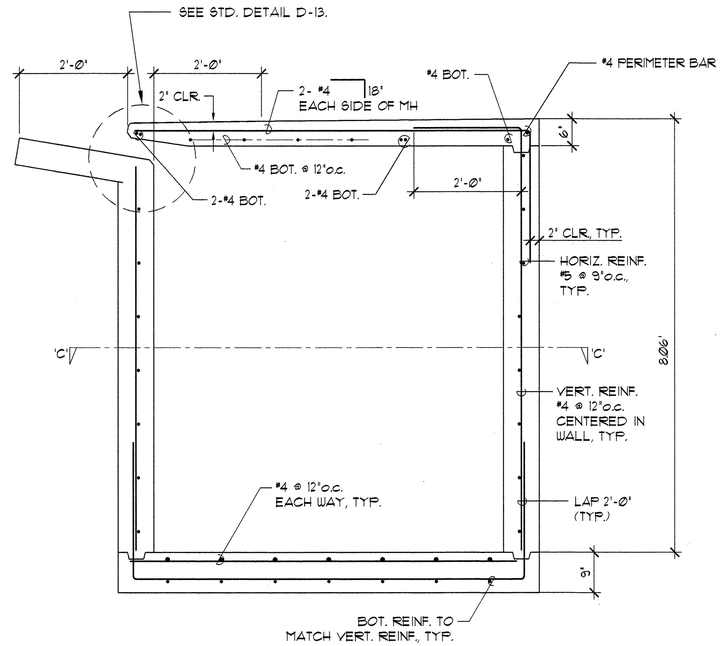

SECT. 'A-A'

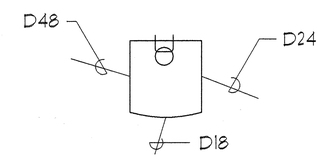

D-1

SCHEMATIC PLAN

N.T.S.

B

S-6

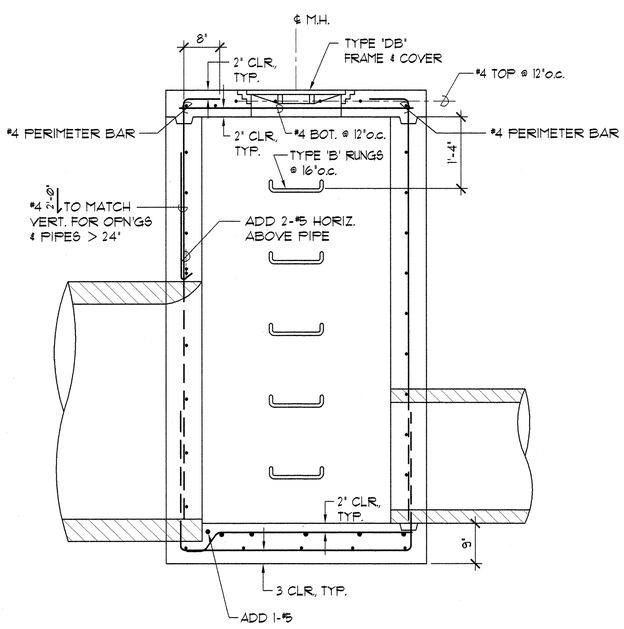

SECT. 'B-B'

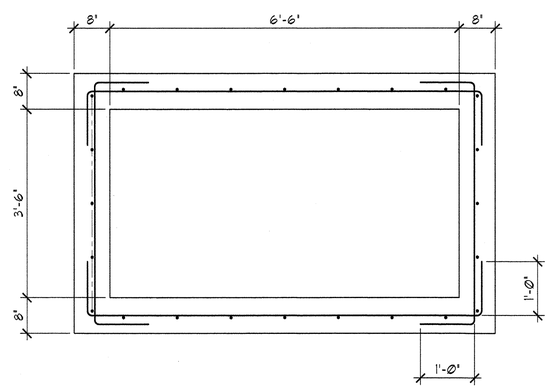

SECT. 'C-C'

SPECIAL TYPE 'D' CATCH BASIN CAST-IN-PLACE DETAILS

SC: 3/4" = 1'-0"

A

S-6

REVISION DATE	DESCRIPTION	MADE BY	APPROVED

cp&e **Community Planning and Engineering, Inc.**
Engineering Design | Construction Management | Infrastructure Planning
1100 Alakea Street, Sixth Floor Honolulu, Hawaii

EAST KAPOLEI II DEVELOPMENT ROAD "E"

HONOULIULI, EWA, OAHU, HAWAII
(DPP SUBD. FILE NO. 2010/SUB-115)
OWNER: DEPARTMENT OF LAND AND NATURAL RESOURCES
DEVELOPER: DEPARTMENT OF HAWAIIAN HOME LANDS
TAX MAP KEY: 9-1-17: PORTION 110

SPECIAL TYPE 'D' CATCH BASIN CAST-IN-PLACE DETAILS

THOMAS Y. TANIMURA
LICENSED PROFESSIONAL ENGINEER
No. 4926-S
HAWAII, U.S.A.

04/30/12
Expiration Date of the License

THIS WORK WAS PREPARED BY ME OR UNDER MY SUPERVISION AND CONSTRUCTION OF THIS PROJECT WILL BE UNDER MY OBSERVATION.

DRAWN BY: HM	ENGINEER: TT	CHECKED BY: TT

APPROVED:

1/24/12
CHIEF, CIVIL ENGINEERING BRANCH, D.P.P. DATE

DWG. NO. **S-6** SHEET 30 OF 61 SHEETS

FILE	POCKET	FOLDER	NO.