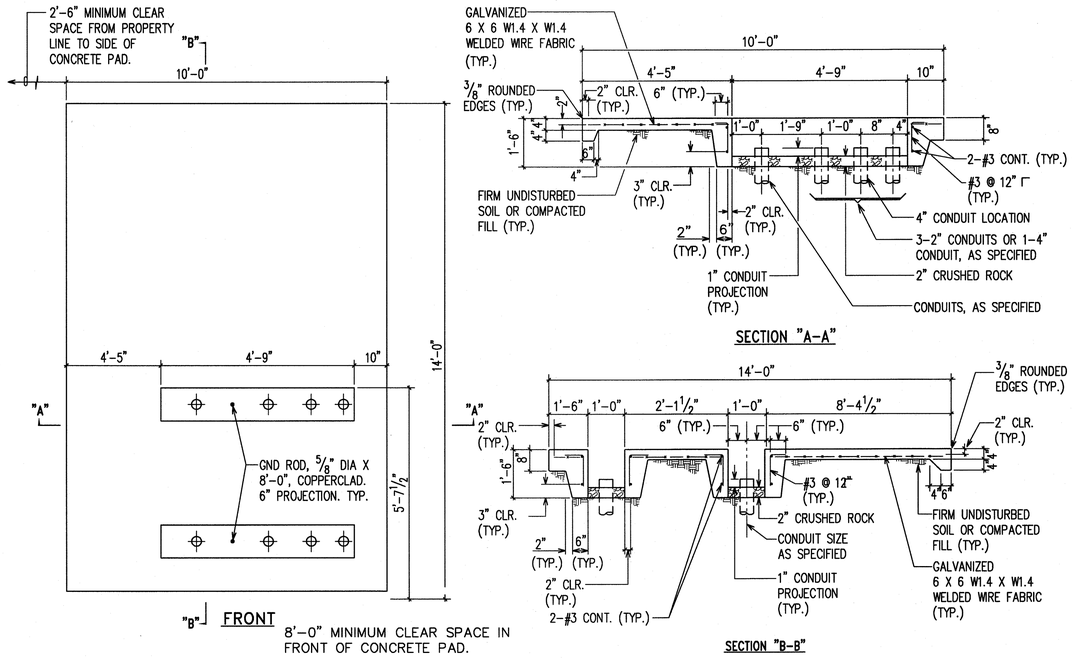

NOTES:

1. CONCRETE COMPRESSIVE STRENGTH: 3000 PSI 28 DAYS. HECO STD. SPECIFICATION CS7401.
2. REINFORCING: CLEAN AND NEW ROUND DEFORMED BARS (GR 40) AND GALVANIZED 6 X 6 W1.4 X W1.4 WELDED WIRE FABRIC.
3. TOP OF CONCRETE PAD TO BE SMOOTH AND TRUE. OTHER EXPOSED SURFACES TO BE SMOOTH AND FREE FROM DEFECTS.
4. CONSTRUCTION TO COMPLY WITH ACI 318 AS AMENDED.
5. WEIGHT OF SWITCHGEAR EQUALS 2,150 POUNDS.

A / E-13 AUTOMATIC TRANSFER SWITCHING EQUIPMENT PAD

NOT TO SCALE

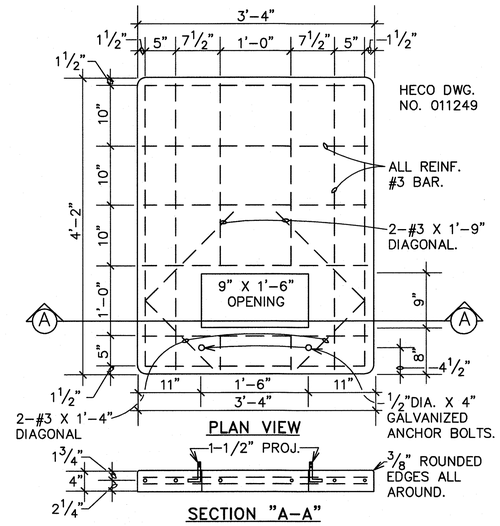

NOTES:

1. COMPRESSIVE STRENGTH OF CONCRETE: 3000 PSI IN 28 DAYS.
2. REINFORCING ROUND DEFORMED BAR SHALL BE CLEAN & NEW.
3. CURE CONCRETE BY APPROVED METHOD.
4. TOP OF CONC. PAD TO BE SMOOTH, TRUE & LEVEL, FREE FROM DEFECTS.
5. CONTRACTOR HAS OPTION OF FURNISHING CAST-IN-PLACE OR PRECAST.

B / E-13 CONCRETE TRANSFORMER PAD DETAIL

NOT TO SCALE

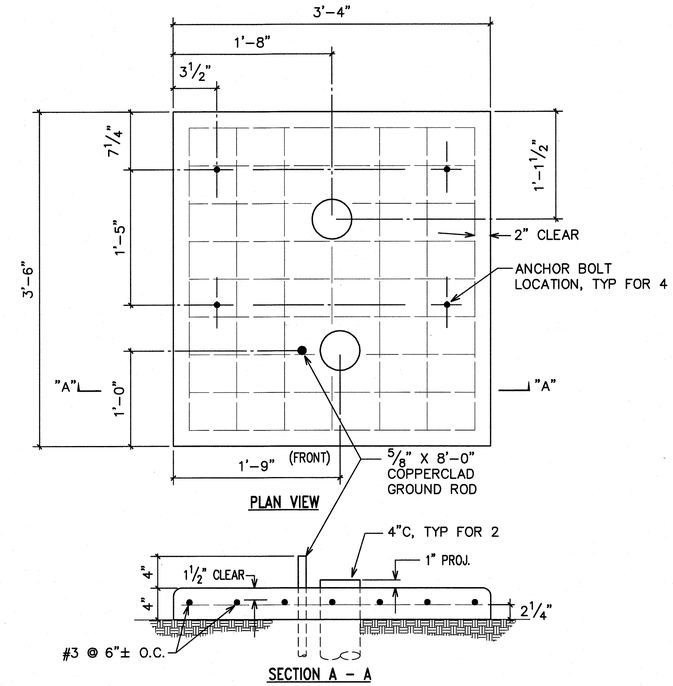

NOTES:

1. CONCRETE
   A) COMPRESSION: 3000 PSI IN 28 DAYS
   B) REINFORCING: CLEAN AND NEW ROUND DEFORMED BARS
2. CONSTRUCTION TO COMPLY WITH ACI 318 AS AMENDED.
3. PAD TO BE SET ON FIRM UNDISTURBED GROUND OR COMPACTED FILL.
4. TOP OF CONCRETE PAD TO BE SMOOTH AND TRUE AND FREE FROM DEFECTS. SIDEWALK FINISH AS PER C & C SPECIFICATIONS. ROUND ALL EXPOSED EDGES TO 3/8" RADIUS.
5. IF THE GROUND RESISTANCE IS MORE THAN 25 OHMS, INSTALL ADDITIONAL GROUND ROD OR GROUND WIRE.

C / E-13 MANUAL SWITCHING EQUIPMENT PAD DETAIL

NOT TO SCALE

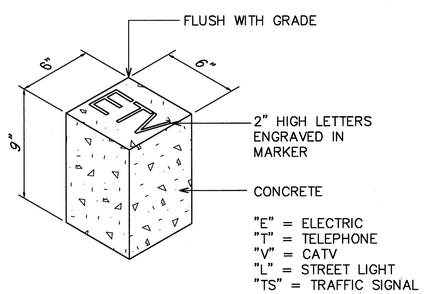

D / E-13 CONCRETE STUB UP MARKER

NOT TO SCALE

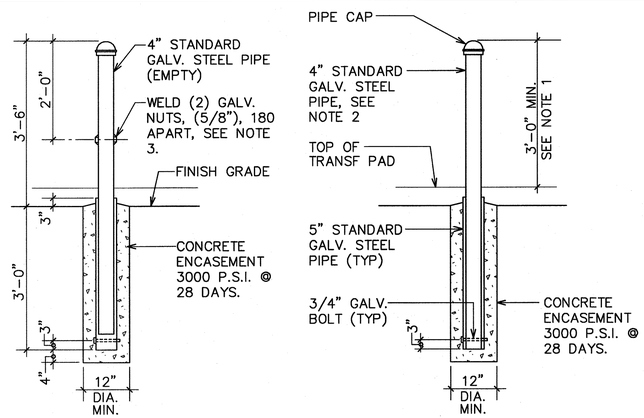

NOTES:

1. ALL STANCHIONS SHALL BE INSTALLED AT SAME HEIGHT. ABOVE TOP OF CONCRETE EQUIPMENT PAD.
2. STATIONARY GALV. PIPE TO BE FILLED WITH CONCRETE TO WEIGH APPROXIMATELY 150 LBS.
3. WELDED NUTS ARE FOR SCREWING IN BOLTS TO ACT AS HANDLES FOR LIFTING REMOVABLE STANCHIONS. BOLT TO BE REMOVED AFTER INSTALLATION.
4. STANCHIONS SHALL BE PAINTED YELLOW PER ANSI SPEC. Z53.1 TO COMPLY WITH OSHA STANDARDS PER COLOR CODING.
5. STANCHION SHALL COMFORM TO ASTM A53.

E / E-13 STANCHION DETAIL

NOT TO SCALE

DRAWING REVIEW

Reviewed for HECO's Facilities Only

Date 5/31/11 By

Customer Installations Department
Hawaiian Electric Company, Inc.

HECO's review of these drawings shall in no way relieve the Customer, its Consultant, its Contractor or anyone acting on the Customer's behalf from the responsibility for engineering, design, materials and any other liability associated with this project.

APPROVED BY:

HAWAIIAN ELECTRIC COMPANY, INC. DATE

GARY I. FUNASAKI LICENSED PROFESSIONAL ENGINEER No. 4795-E HAWAII, U.S.A.

5 MAY 2011

THIS WORK WAS PREPARED BY ME OR UNDER MY SUPERVISION. CONSTRUCTION OF THIS PROJECT WILL BE UNDER MY OBSERVATION. LICENSE EXPIRATION DATE: 04/30/12

REVISION DATE	DESCRIPTION	MADE BY	APPROVED

cp&e Community Planning and Engineering, Inc.
Engineering Design | Construction Management | Infrastructure Planning
1100 Alakea Street, Sixth Floor Honolulu, Hawaii

EAST KAPOLEI II DEVELOPMENT ROAD "E"

HONOULIULI, EWA, OAHU, HAWAII
(DPP SUBD. FILE NO. 2010/SUB-115)
OWNER: DEPARTMENT OF LAND AND NATURAL RESOURCES
DEVELOPER: DEPARTMENT OF HAWAIIAN HOME LANDS
TAX MAP KEY: 9-1-17: Portion 110

MISCELLANEOUS DETAILS

DRAWN BY: | ENGINEER: GF | CHECKED BY: GF

APPROVED:

DATE DATE DATE DATE

DWG. NO. E-13 SHEET 45 OF 61 SHEETS

FILE	POCKET	FOLDER	NO.

LAST SAVE: 03/17/11 @ 08:06:18 BY: RN PLOT SC 1"=0"
Z:\JOBS\PROJECTS\0904C\DTL\E0904C_E-13.DWG