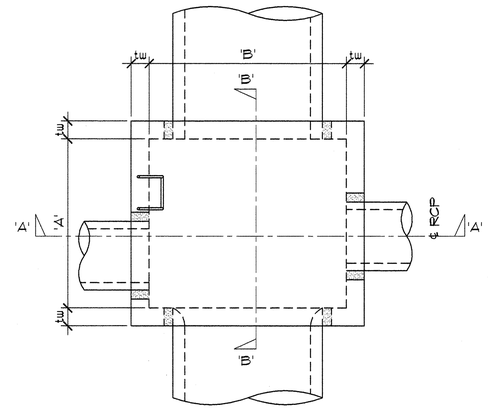

TOP PLAN

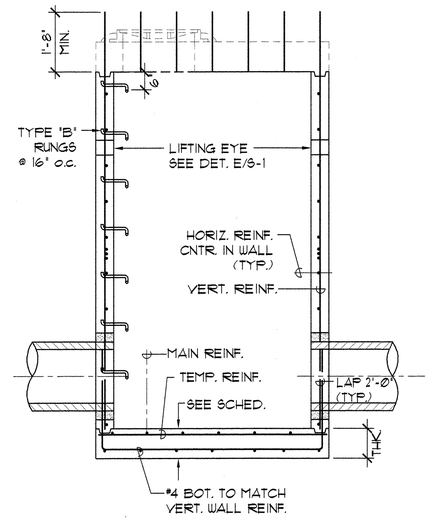

SECTION 'A-A'

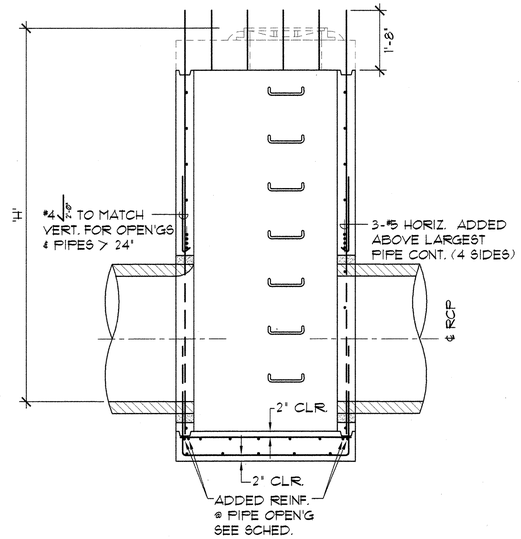

SECTION 'B-B'

SPECIAL DRAIN MANHOLE PRECAST DETAIL

SC: 1/2"=1'-Ø"

A
S-3

NOTES:

1) TOP SLAB TO BE CAST-IN-PLACE IN FIELD. FOLLOW REINF. & DETAILS SHOWN ON SHEET S-2.
2) FOR DIMENSIONS & REINF. FOLLOW SCHEDULES SHOWN ON SHEET S-2.
3) SEE SHEET S-1 FOR GENERAL NOTES & TYPICAL DETAILS.

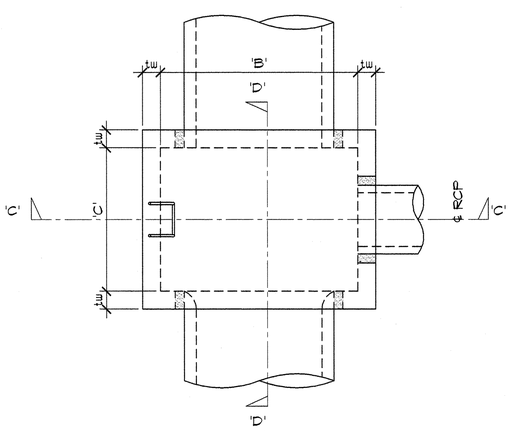

TOP PLAN

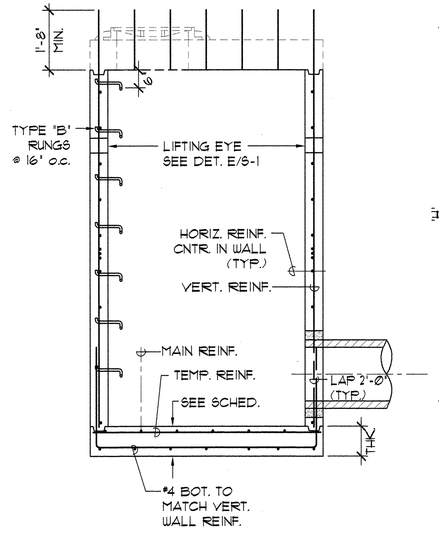

SECTION 'C-C'

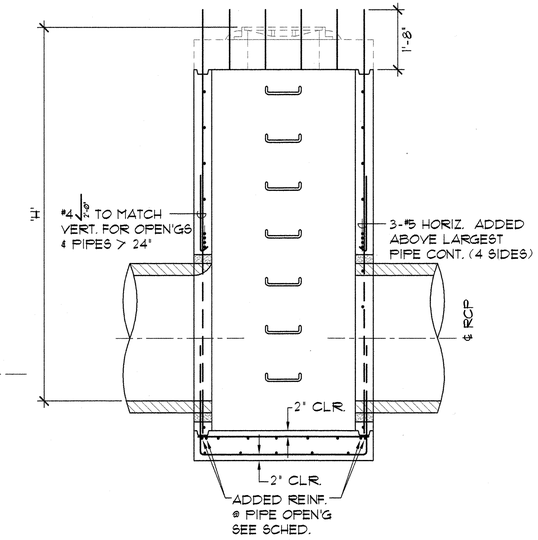

SECTION 'D-D'

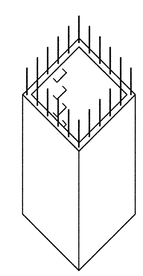

ISOMETRIC

N.T.S.

SPECIAL DRAIN MANHOLE PRECAST DETAIL

SC: 1/2"=1'-Ø"

B
S-3

NOTES:

1) TOP SLAB TO BE CAST-IN-PLACE IN FIELD. FOLLOW REINF. & DETAILS SHOWN ON SHEET S-2.
2) FOR DIMENSIONS & REINF. FOLLOW SCHEDULES SHOWN ON SHEET S-2.
3) SEE SHEET S-1 FOR GENERAL NOTES & TYPICAL DETAILS.

THOMAS Y. TANIMURA LICENSED PROFESSIONAL ENGINEER No. 4926-S HAWAII, U.S.A.

04/30/12
Expiration Date of the License

THIS WORK WAS PREPARED BY ME OR UNDER MY SUPERVISION AND CONSTRUCTION OF THIS PROJECT WILL BE UNDER MY OBSERVATION.

REVISION DATE	DESCRIPTION	MADE BY	APPROVED

Community Planning and Engineering, Inc.
Engineering Design | Construction Management | Infrastructure Planning
1100 Alakea Street, Sixth Floor Honolulu, Hawaii

EAST KAPOLEI II DEVELOPMENT ROAD "E"

HONOULIULI, EWA, OAHU, HAWAII
(DPP SUBD. FILE NO. 2010/SUB-115)
OWNER: DEPARTMENT OF LAND AND NATURAL RESOURCES
DEVELOPER: DEPARTMENT OF HAWAIIAN HOME LANDS
TAX MAP KEY: 9-1-17: PORTION 110

SPECIAL DRAIN MANHOLE PRECAST DETAILS

DRAWN BY: HM	ENGINEER: TT	CHECKED BY: TT

APPROVED:

1/24/12
CHIEF, CIVIL ENGINEERING BRANCH, D.P.P. DATE

DWG. NO. S-3 SHEET 27 OF 61 SHEETS

FILE	POCKET	FOLDER	NO.