STREET TREE PLANTING NOTES:

1. UPON INSTALLATION OF THE STREET TREES, THE INSTALLER/CONTRACTOR SHALL CONTACT THE DEPARTMENT OF PARKS AND RECREATION (DPR), AT 971-7151 TO SCHEDULE AN INSPECTION OF THE TREE(S) INSTALLATION. NOTIFICATION MUST BE GIVEN AT LEAST SEVEN (7) DAYS PRIOR TO PRE-MAINTENANCE AND FINAL INSPECTIONS. A NOTICE OF ACCEPTANCE WILL BE ISSUED BY THE DEPARTMENT OF PARKS AND RECREATION WHEN THEY HAVE DETERMINED THE TREES HAVE BEEN PROPERLY INSTALLED AND MAINTAINED.
2. THE STREET TREE MAINTENANCE PERIOD SHALL BE FOR NINETY (90) CALENDAR DAYS OR UNTIL PROJECT MAINTENANCE HAS BEEN ASSUMED BY ADJACENT PROPERTY OWNER AND/OR THE COMMUNITY ASSOCIATION.
3. THE STANDARD CITY AND COUNTY OF HONOLULU, DEPARTMENT OF PARKS AND RECREATION SPECIFICATIONS FOR STREET TREE PLANTING AND LANDSCAPING SHALL BE MADE PART OF THE CONSTRUCTION DOCUMENTS.
4. STREET TREE PLANS THAT HAVE BEEN REVISED OR PROJECTS THAT HAVEN'T STARTED CONSTRUCTION WITHIN TWO (2) YEARS OF THE DATE OF THE DEPARTMENT OF PLANNING AND PERMITTING (DPP) APPROVAL WILL BE SUBJECT TO RE-APPROVAL. WHEN SUBSTITUTION OF TREE TYPES ARE REQUESTED BY THE DEVELOPER OR CONTRACTOR DUE TO UNAVAILABILITY, THE PLANS SHALL BE REVISED (AFTER NOTIFICATION OF TREE SELECTION) AND (THE PLANS) SUBMITTED FOR RE-APPROVAL.
5. PRIOR TO ACCEPTANCE OF THE TREE INSTALLATION BY THE DIVISION OF URBAN FORESTRY, DEPARTMENT OF PARKS AND RECREATION, THE STREET INSTALLER IS REQUIRED TO SUBMIT REPRODUCIBLE AS-BUILT PLANS TO THE DEPARTMENT OF PARKS AND RECREATION.
6. APPROVAL IS FOR STREET TREE PLANTING WITHIN THE ROAD RIGHT-OF-WAY ONLY. IT IS NOT AN APPROVAL OF THE PLANTING AN IRRIGATION PLAN OUTSIDE OF THE ROAD RIGHT-OF-WAY.
7. THE CITY SHALL BE RESPONSIBLE TO TRIM THE TREE(S). JAMES CAMPBELL COMPANY AND/OR THE COMMUNITY ASSOCIATION, HOMEOWNER OR LOT OWNER IS RESPONSIBLE TO MAINTAIN THE TREE(S) AND ANY IRRIGATION SYSTEM AND PAY FOR WATER AND ELECTRICITY AS REQUIRED FOR MAINTENANCE OF THE STREET TREES AND PLANTING STRIPS WITHIN THE ROAD RIGHTS-OF-WAY ABUTTING THEIR PROPERTIES.
8. THE STREET LIGHTING SYSTEM SHALL BE KEPT OPERATIONAL DURING CONSTRUCTION. ANY RELOCATION REQUIRED SHALL BE APPROVED BY THE MECHANICAL/ELECTRICAL DESIGN AND ENGINEERING DIVISION, DEPARTMENT OF DESIGN AND CONSTRUCTION, AND PAID FOR BY THE CONTRACTOR.
9. THE CONTRACTOR SHALL BE RESPONSIBLE FOR ANY DAMAGES TO THE CITY'S EXISTING STREET LIGHTING FACILITIES, TRAFFIC SIGNAL FACILITIES (INCLUDING THE TRAFFIC SIGNAL INTERCONNECT SYSTEM, COMMUNICATIONS FIBER OPTIC CABLE SYSTEM AND TRAFFIC SIGNAL FIBER OPTIC CABLE SYSTEM). ANY AND ALL DAMAGES TO THESE FACILITIES SHALL BE REPAIRED BY THE CONTRACTOR AT HIS COST IN ACCORDANCE WITH THE REQUIREMENTS OF THE CITY AND COUNTY OF HONOLULU.
10. NEW TREES SHALL BE PRE-APPROVED AT THE NURSERY BY THE LANDSCAPE CONTRACTOR AND CONCURRED BY THE DIVISION OF URBAN FORESTRY (DUF) TWO WEEKS PRIOR TO THEIR DELIVERY TO THE PROJECT SITE. PLEASE CONTACT BRANDON AU, PARK GROUNDS IMPROVEMENT SUPERVISOR II OF DUF, AT 971-7151 TO SCHEDULE AN INSPECTION.

PLANTING NOTES:

1. LANDSCAPE CONTRACTOR SHALL FIELD VERIFY ALL PLANT QUANTITIES AND DIMENSIONS PRIOR TO INSTALLATION. QUANTITIES SHOWN IN PLANT LIST ARE FOR CONVENIENCE ONLY. PLANS SHALL GOVERN.
2. LANDSCAPE CONTRACTOR SHALL BE RESPONSIBLE FOR LOCATING AND PROTECTING ALL EXISTING UTILITIES.
3. NOTIFY AND MEET WITH THE CITY PRIOR TO PLANT INSTALLATION FOR VERIFICATION/INTERPRETATION OF PLANS.
4. NOTIFY CITY OF ANY DISCREPANCIES IN PLANT LOCATIONS OR INSUFFICIENT PLANT QUANTITIES DUE TO DIFFERENCES IN PLAN AND ACTUAL FIELD CONDITIONS.
5. NOTIFY OFFICER-IN-CHARGE 30 DAYS PRIOR TO PLANTING OPERATIONS FOR APPROVAL OF ALL PLANT MATERIAL AT PLACE OF GROWTH. ALL PLANT MATERIAL NOT APPROVED BY THE OFFICER-IN-CHARGE WILL BE SUBJECT TO REJECTION.
6. THE LANDSCAPE CONTRACTOR SHALL INSTALL A 4" LAYER OF IMPORTED SOIL MATERIAL WITH AMENDMENTS OVER ALL PLANTING AREAS, LANDSCAPE CONTRACTOR TO COORDINATE LANDSCAPE PLANTING OPERATIONS WITH THE GENERAL CONTRACTOR AND/OR THE FINISH GRADING CONTRACTOR.
7. LANDSCAPE CONTRACTOR SHALL BE RESPONSIBLE FOR PROTECTING ALL EXISTING TREES WITHIN THE CONSTRUCTION SITE.

PLANT SCHEDULE

TREES	QTY	BOTANICAL NAME	COMMON NAME	CONT	REMARKS
	54	CASSIA X NEALIAE	RAINBOW SHOWER	FIELD STOCK	

SHRUB AREAS	QTY	BOTANICAL NAME	COMMON NAME	CONT	REMARKS
	169	HIBISCUS X 'HULA GIRL'	HULA GIRL HIBISCUS	3 GAL@ 18" OC	

SOD/SEED	QTY	BOTANICAL NAME	COMMON NAME	CONT	REMARKS
	46,306 SF	CYNODON DACTYLON	BERMUDA GRASS	HYDRO SPRIG	

REFERENCE NOTES SCHEDULE

	DESCRIPTION	QTY
	4" LAYER TOP SOIL	575.72 CY
	2" LAYER SOIL AMENDMENT	46,539 SF
	2" LAYER BLACK CINDER OVER FILTER FABRIC	2.02 CY
	FILTER FABRIC	327 SF
— —	PLASTIC HEADER	121 LF
— · · —	ROOT BARRIER	1,296 LF

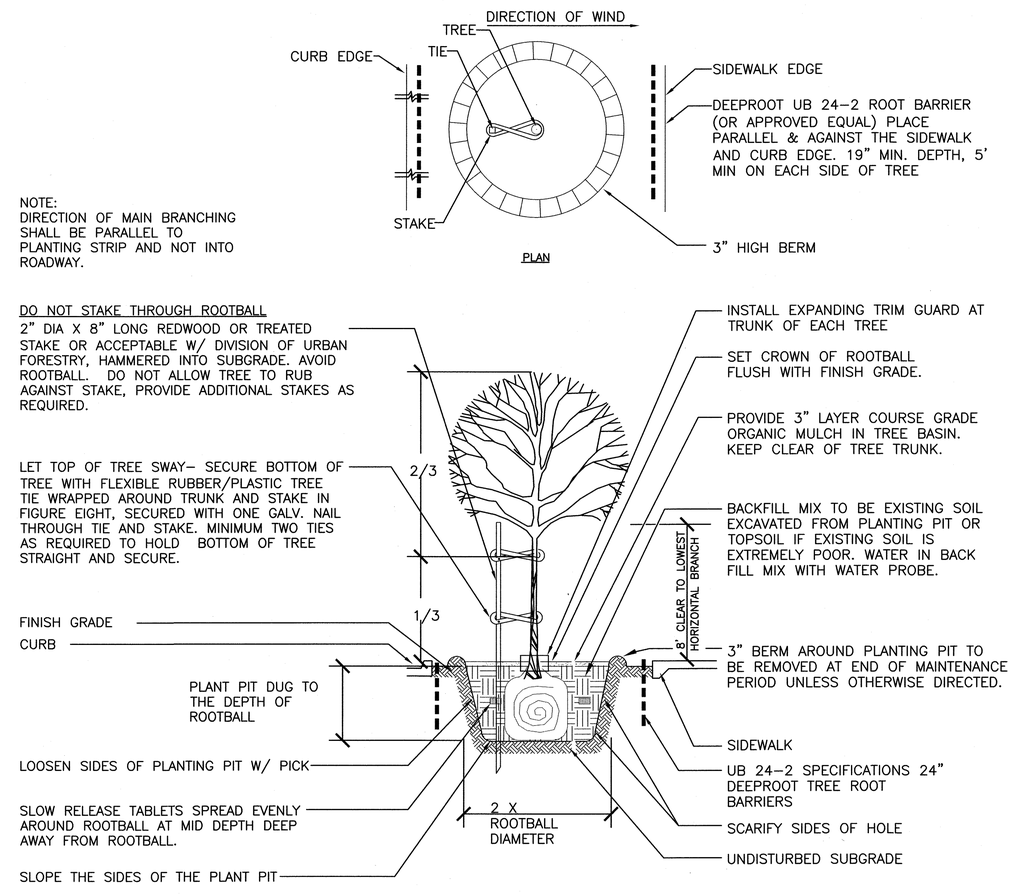

1 TYPICAL TREE PLANTING DETAIL
NOT TO SCALE

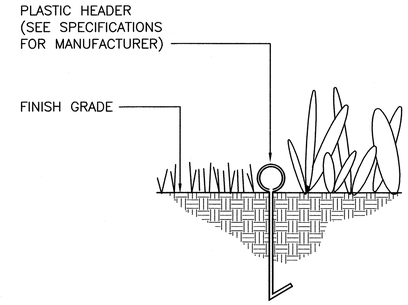

NOTE:
REFER TO MANUFACTURER'S SPECIFICATIONS FOR INSTALLATION INSTRUCTIONS.

2 PLASTIC HEADER DETAIL
NOT TO SCALE 32 9413.16-01

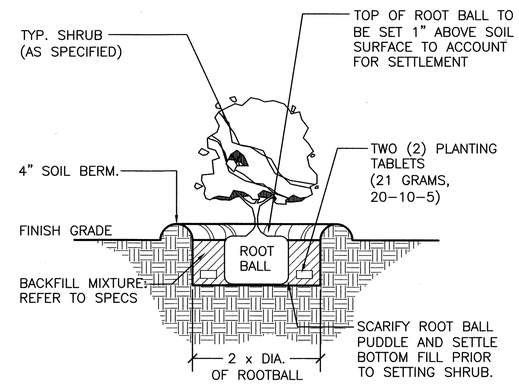

3 SHRUB PLANTING
NOT TO SCALE 329333.13-04

REVISION DATE	DESCRIPTION	MADE BY	APPROVED

cp&c Community Planning and Engineering, Inc.
Engineering Design | Construction Management | Infrastructure Planning
1100 Alakea Street, Sixth Floor Honolulu, Hawaii

EAST KAPOLEI II DEVELOPMENT ROAD "E"
HONOULIULI, EWA, OAHU, HAWAII
(DPP SUBD. FILE NO. 2010/SUB-115)
OWNER: DEPARTMENT OF LAND AND NATURAL RESOURCES
DEVELOPER: DEPARTMENT OF HAWAIIAN HOME LANDS
TAX MAP KEY: 9-1-17: Portion 110

LANDSCAPE DETAILS, LEGEND & NOTES

DRAWN BY: CB ENGINEER: RC CHECKED BY: RH
APPROVED:
CHIEF, URBAN DESIGN BRANCH D.P.P. DATE

RUSSELL Y.J. CHUNG LICENSED PROFESSIONAL LANDSCAPE ARCHITECT No. 6076 HAWAII, U.S.A.

THIS WORK WAS PREPARED BY ME OR UNDER MY SUPERVISION AND CONSTRUCTION OF THIS PROJECT WILL BE UNDER MY OBSERVATION
4/30/13

DWG. NO. L-5 SHEET 61 OF 61 SHEETS

FILE	POCKET	FOLDER	NO.