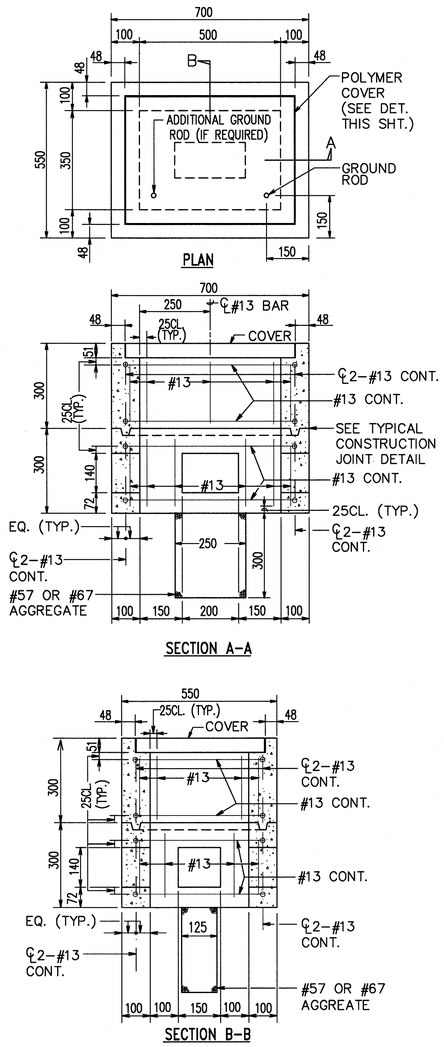

A E-21 TYPE "A" PULLBOX (OLD TYPE "B")
NOT TO SCALE

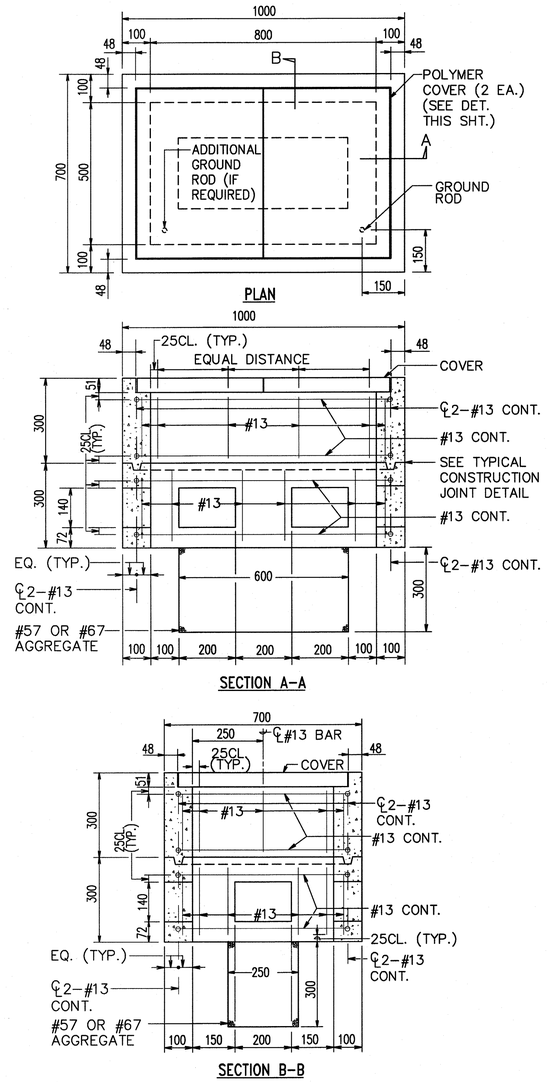

C E-21 TYPE "B" PULLBOX (OLD TYPE "C")
NOT TO SCALE

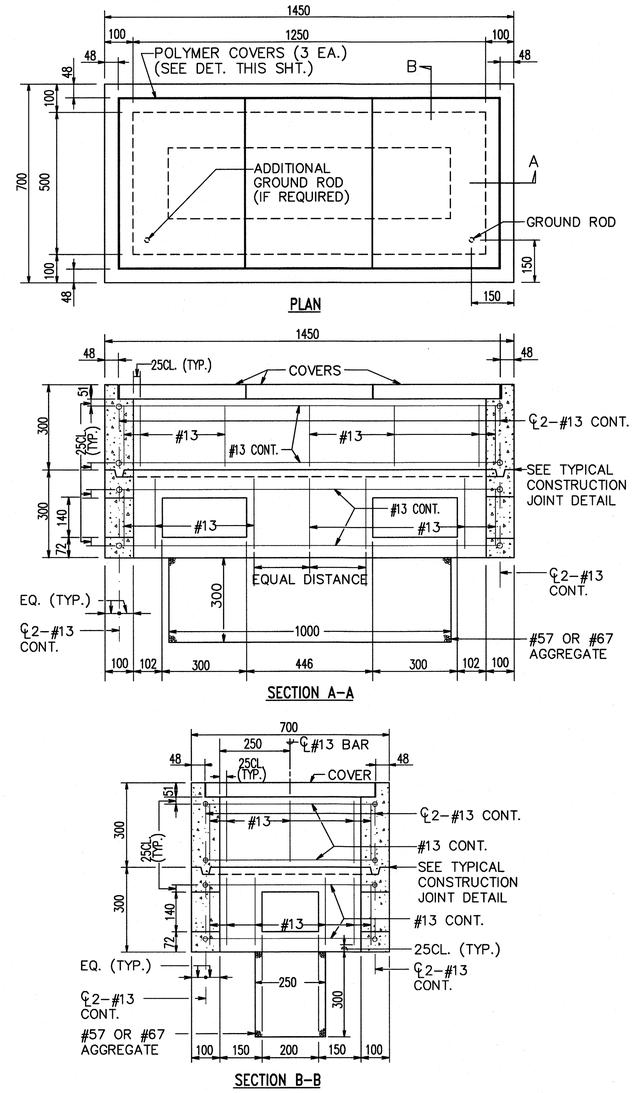

D E-21 TYPE "C" PULLBOX (OLD TYPE "D")
NOT TO SCALE

GENERAL NOTES

1. PROVIDE A MINIMUM OF ONE 16 X 2.5M COPPERWELD GROUND ROD IN EACH PULLBOX. WHEN DIRECTED BY THE TRAFFIC SIGNAL INSPECTOR/ENGINEER, INSTALL ADDITIONAL GROUND RODS. COST OF GROUND RODS SHALL BE INCIDENTAL TO THE PULLBOXES.
2. ALL PRE-CAST CONCRETE PULLBOXES SHALL BE MANUFACTURED IN TWO PIECES.
3. THE PULLBOX WITH COVER SHALL BE CAPABLE OF SUPPORTING AN MS 18 LOADING.
4. THE MAXIMUM WEIGHT OF THE PULLBOX COVER SHALL NOT EXCEED 27 KILOGRAMS.
5. THE OPENINGS FOR THE CONDUITS ON ALL PULLBOXES SHALL BE PRE-CAST CONCRETE KNOCKOUTS.
6. AFTER INSTALLING THE CONDUITS IN THE OPENINGS OF THE PULLBOXES, THE CONTRACTOR SHALL FILL THE EXCESS OPENING IN THE PRE-CAST KNOCKOUTS WITH CONCRETE MORTAR.
7. PRIOR TO INSTALLING THE PULLBOXES, THE CONTRACTOR SHALL LEVEL THE BOTTOM OF THE TRENCH AND ACHIEVE A MINIMUM OF 95% RELATIVE COMPACTION OF THE BOTTOM OF THE TRENCH.
8. ALL CONCRETE SHALL BE CLASS A (25MPA, MIN.)
9. REBARS SHALL BE GRADE 300 AND ALL LAPPED SPLICES SHALL BE 360MM MINIMUM.
10. THE #57 OR #67 SIZE AGGREGATE SHALL CONFORM TO LATEST VERSION OF AASHTO M43 (ASTM D 448).
11. TYPE "C" PULLBOX SHALL BE INSTALLED IN A LOCATION PROTECTED FROM VEHICULAR TRAFFIC (I.E. RAISED SIDEWALK, BEHIND A.C. CURBS, TRAFFIC SIGNAL STANDARD OR PIPE GUARDS).

ALL DIMENSIONS ARE IN MILLIMETERS UNLESS OTHERWISE INDICATED

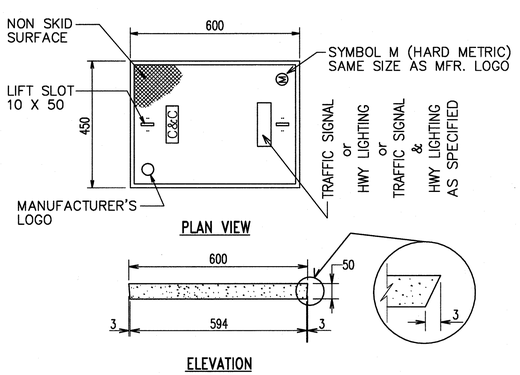

B E-21 POLYMER CONCRETE COVER
NOT TO SCALE

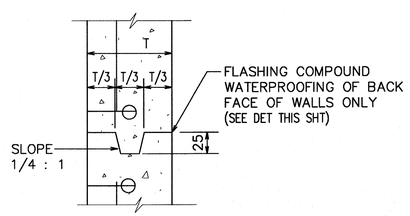

E E-21 TYPICAL CONSTRUCTION JOINT DETAIL
NOT TO SCALE

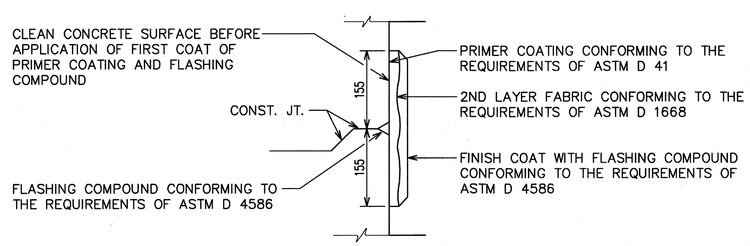

F E-21 TYPICAL FLASHING COMPOUND WATERPROOFING DETAILS
NOT TO SCALE

REVISION DATE	DESCRIPTION	MADE BY	APPROVED

cp&e **Community Planning and Engineering, Inc.**
Engineering Design | Construction Management | Infrastructure Planning
1100 Alakea Street, Sixth Floor Honolulu, Hawaii

EAST KAPOLEI II DEVELOPMENT ROAD "E"
HONOULIULI, EWA, OAHU, HAWAII
(DPP SUBD. FILE NO. 2010/SUB-115)
OWNER: DEPARTMENT OF LAND AND NATURAL RESOURCES
DEVELOPER: DEPARTMENT OF HAWAIIAN HOME LANDS
TAX MAP KEY: 9-1-17: Portion 110

TRAFFIC SIGNAL PULLBOX DETAILS

GARY I. FUNASAKI LICENSED PROFESSIONAL ENGINEER No. 4195-E HAWAII, U.S.A.
17 MAR 2011
THIS WORK WAS PREPARED BY ME OR UNDER MY SUPERVISION. CONSTRUCTION OF THIS PROJECT WILL BE UNDER MY OBSERVATION. LICENSE EXPIRATION DATE: 04/30/12

DRAWN BY:	ENGINEER: GF	CHECKED BY: GF

APPROVED:
CHIEF, TRAFFIC SIGNALS AND TECHNOLOGY, D.T.S. DATE 5/5/11
CHIEF, HIGHWAYS DIVISION, D.P.W. DATE 12/5/11
DATE DATE

FILE	POCKET	FOLDER	NO.

DWG. NO. E-21 SHEET 53 OF 61 SHEETS

LAST SAVE: 03/17/11 @ 08:57:08 BY: RN PLOT SC:1"=0"=1"
J:\CAD\PROJECTS\2006\0172\2006WO_TS-1406001