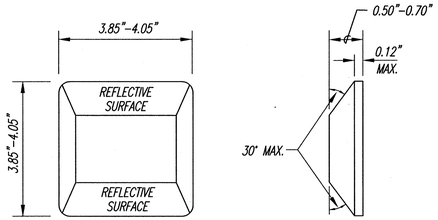

TYPE D

TWO -WAY YELLOW REFLECTIVE MARKER

NOT TO SCALE

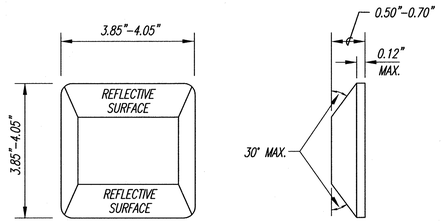

TYPE DB

TWO-WAY BLUE REFLECTIVE MARKER

NOT TO SCALE

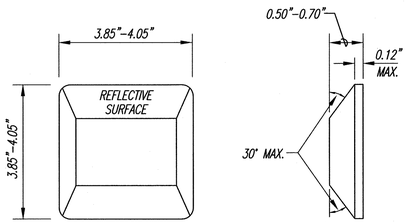

TYPE H

ONE WAY YELLOW REFLECTIVE MARKER

NOT TO SCALE

NOTES:

1. SIGNS SHALL BE ATTACHED TO POSTS WITH 5/16" ZINC PLATED STEEL BOLTS, NUTS AND WASHERS.
2. SIGNS 48" WIDE OR LARGER THAN 10 SQ. FEET IN AREA SHALL BE MOUNTED ON 2 – 2" ø GALV. POSTS. THE SIGN SHALL BE INSTALLED WITH AT LEAST 1 FT. CLEARANCE FROM THE SIGN EDGE TO THE CURB FACE.

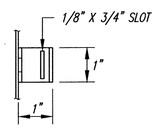

SIDE VIEW

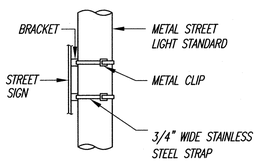

STRAP DETAIL

NOT TO SCALE

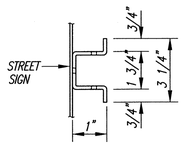

PLAN

BRACKET DETAIL

NOT TO SCALE

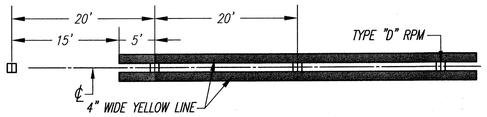

TYPICAL TWO-LANE, PASSING PROHIBITED CENTERLINE MARKING

NOT TO SCALE

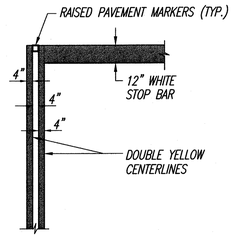

CENTERLINE AND STOP BAR DETAIL

NOT TO SCALE

NOTE: WHEN THIS MARKING IS USED, IT SHALL BE PLACED IN EACH LANE OF TRAFFIC APPROACHING THE INTERSECTION.

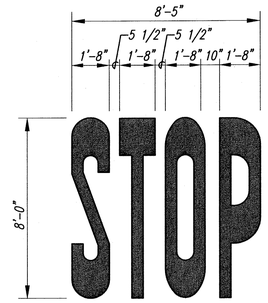

8'-0" SIZE

STANDARD DETAILS OF THE WORD "STOP"

NOT TO SCALE

ANCHOR POSTS NOTES:

1. KEEP INSIDE OF 2– ¼" ANCHOR POST FREE FROM IMPEDIMENTS THAT MAY PREVENT PROPER SEATING OF 2" SIGN POST.
2. SQUARE TUBING SIGN POST SHALL BE TELESCOPING TYPE WITH 7/16" DIA. HOLES AT 1" O.C. ON FOUR SIDES.
3. OCTAGON SIGN POST SHALL BE TELESCOPING TYPE WITH 7/16" DIA. HOLES AT 1" O.C. ON TWO SIDES.
4. USE 5/16" x 2– ¾" BOLTS TO SECURE THE OCTAGONAL AND SQUARE TUBING POST ONTO THE 2– ¼" SQUARE TUBE ANCHOR POST.

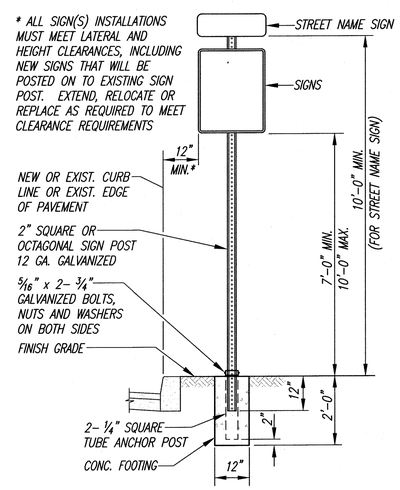

INSTALLATION OF NEW OR RELOCATED SIGN POST W/ CONCRETE FOOTING

NOT TO SCALE

ANCHOR POSTS NOTES:

1. KEEP INSIDE OF 2– ¼" ANCHOR POST FREE FROM IMPEDIMENTS THAT MAY PREVENT PROPER SEATING OF 2" SIGN POST.
2. SQUARE TUBING SIGN POST SHALL BE TELESCOPING TYPE WITH 7/16" DIA. HOLES AT 1" O.C. ON FOUR SIDES.
3. OCTAGON SIGN POST SHALL BE TELESCOPING TYPE WITH 7/16" DIA. HOLES AT 1" O.C. ON TWO SIDES.
4. USE 5/16" x 2– ¾" BOLTS TO SECURE THE OCTAGONAL AND SQUARE TUBING POST ONTO THE 2– ¼" SQUARE TUBE ANCHOR POST.
5. MINIMUM BURY DEPTH FOR THE 2– ¼" ANCHOR POST SHALL BE AS FOLLOWS:
   4'–0" MIN. AT POOR SOIL CONDITIONS
   2'–6" MIN. AT ROCKY CONDITIONS

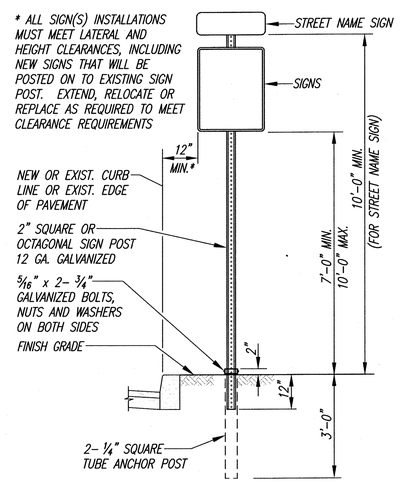

INSTALLATION OF NEW OR RELOCATED SIGN POST W/ ANCHOR POST, WITHOUT CONCRETE FOOTING

NOT TO SCALE

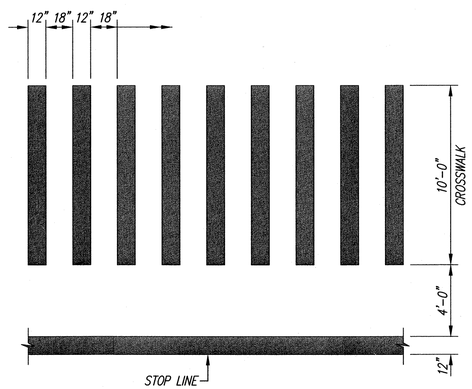

STANDARD CROSSWALK WITH STOP LINE

NOT TO SCALE

SIGNS AND MARKINGS NOTES

1. ALL TRAFFIC SIGN AND PAVEMENT MARKING INSTALLATIONS SHALL BE DONE IN ACCORDANCE WITH THE "MANUAL ON UNIFORM TRAFFIC CONTROL DEVICES FOR STREETS AND HIGHWAYS", 2009 EDITION, AS AMENDED, THE LATEST SPECIFICATIONS FROM THE TRAFFIC REVIEW BRANCH, DEPARTMENT OF PLANNING AND PERMITTING, AND AS SHOWN ON THE PLANS.
2. CONTRACTOR SHALL NOTIFY AND COORDINATE WORK WITH THE CIVIL ENGINEERING BRANCH, DEPARTMENT OF PLANNING AND PERMITTING, ONE (1) WEEK IN ADVANCE OF COMMENCING WORK AT 768–8084.
3. CONTRACTOR SHALL SUBMIT MATERIAL BROCHURES FOR ALL SIGNS AND PAINT MATERIALS TO THE TRAFFIC REVIEW BRANCH, DEPARTMENT OF PLANNING AND PERMITTING.
4. THE SIGNING AND/OR STRIPING CONTRACTOR SHALL KEEP ONE (1) SET OF APPROVED PLANS AT THE PROJECT SITE AT ALL TIMES DURING CONSTRUCTION WORK.
5. CONTRACTOR SHALL PAINT TEMPORARY GUIDELINES AND OUTLINE OF ARROWS, LEGENDS, AND CROSSWALKS WITH A TWO INCH (2") WIDE BRUSHED LINE ON THE DAY THE ROADWAY IS OPENED TO TRAFFIC. THESE MARKINGS MUST BE APPROVED BY THE INSPECTOR FROM THE TRAFFIC REVIEW BRANCH, DEPARTMENT OF PLANNING AND PERMITTING.
6. CONTRACTOR SHALL NOTIFY THE CIVIL ENGINEERING BRANCH, DEPARTMENT OF PLANNING AND PERMITTING AT 768–8084, THREE (3) DAYS IN ADVANCE OF FINAL INSPECTION.
7. CONTRACTOR SHALL MEET WITH THE INSPECTOR FROM THE CIVIL ENGINEERING BRANCH, DEPARTMENT OF PLANNING AND PERMITTING DURING THE FINAL INSPECTION.
8. WITHIN TEN (10) DAYS FOLLOWING NOTIFICATION OF AWARD OF CONTRACT, THE CONTRACTOR SHALL SUBMIT TO THE DEPARTMENT OF PLANNING AND PERMITTING (PHONE: 768–8084) FOR APPROVAL, A LIST OF ANY SIGNING AND PAVEMENT MARKING MATERIAL WHICH HE PROPOSES TO INSTALL. THE LIST SHALL BE COMPLETE AS TO THE NAME OF MANUFACTURER, CATALOG NUMBER, AND SHALL BE SUPPLEMENTED WITH MATERIAL BROCHURES.
9. UPON FINAL INSPECTION OF THE PROJECT, THE CONTRACTOR SHALL SUBMIT A LETTER OF CERTIFICATION FOR ALL TRAFFIC SIGNING AND PAVEMENT MARKING MATERIALS INSTALLED.
10. SIGNS SHALL BE ATTACHED TO BRACKETS WITH 5/16" ZINC PLATED STEEL BOLTS, NUTS AND WASHERS. SIGNS 48" WIDE OR LARGER THAN 10 SQ. FT. IN AREA SHALL BE MOUNTED ON TWO 2" GALV. PIPE POST. THE SIGN SHALL BE INSTALLED WITH AT LEAST ONE (1) FOOT CLEARANCE FROM THE SIGN EDGE TO THE CURB FACE.
11. ALL TRAFFIC SIGNS SHALL BE REFLECTORIZED.
12. RAISED PAVEMENT MARKERS SHALL BE INSTALLED IN ACCORDANCE WITH THE DEPARTMENT OF PLANNING AND PERMITTING STANDARDS.
13. LOCATION OF "STOP" SIGN:
    A. INSTALL "STOP" SIGN AT CURB TANGENT POINT.
    B. INSTALL "STOP" SIGN ON METAL STREET LIGHT STANDARD IF A STANDARD IS LOCATED WITHIN 10 FEET OF CURB RETURN.
    C. INSTALL "STOP" SIGN IN FRONT OF UTILITY POLE IF A POLE IS LOCATED WITHIN 10 FEET OF CURB RETURN.
14. PAVEMENT WORD AND SYMBOL MARKINGS SHALL BE IN ACCORDANCE WITH THE DEPARTMENT OF PLANNING AND PERMITTING STANDARDS.
15. THE CONTRACTOR SHALL USE THERMOPLASTIC MATERIAL, APPROVED BY THE CIVIL ENGINEERING BRANCH, DEPARTMENT OF PLANNING AND PERMITTING, FOR ALL CROSSWALKS, STOP BARS, PAVEMENT ARROWS, CENTER LINES, LANE LINES, ARC LINES, CHANNELIZED TRAFFIC ISLANDS, AND LEGENDS.

REVISION DATE	DESCRIPTION	MADE BY	APPROVED

cp&e Community Planning and Engineering, Inc.
Engineering Design | Construction Management | Infrastructure Planning
1100 Alakea Street, Sixth Floor Honolulu, Hawaii

EAST KAPOLEI II DEVELOPMENT ROAD "E"

HONOULIULI, EWA, OAHU, HAWAII
(DPP SUBD. FILE NO. 2010/SUB-115)
OWNER: DEPARTMENT OF LAND AND NATURAL RESOURCES
DEVELOPER: DEPARTMENT OF HAWAIIAN HOME LANDS
TAX MAP KEY: 9-1-17: Portion 110

ANSON M. MURAYAMA
LICENSED PROFESSIONAL ENGINEER
No. 6975-C
HAWAII, U.S.A.

THIS WORK WAS PREPARED BY ME OR UNDER MY SUPERVISION. CONSTRUCTION OF THIS PROJECT WILL BE UNDER MY OBSERVATION. LICENSE EXPIRATION DATE: 04/30/12

TRAFFIC SIGNS AND PAVEMENT MARKING DETAILS

DRAWN BY: LYLT	ENGINEER: SS, FJC	CHECKED BY: AMM

APPROVED:

CHIEF, TRAFFIC REVIEW BRANCH, D.P.P. DATE: 12/8/11

FILE	POCKET	FOLDER	NO.

DWG. NO. C-23 SHEET 24 OF 61 SHEETS

P:\Land Projects\DHHL East Kapolei II\Road E\Construction Drawings\Government Review #4124 Traffic Signs & Pavement Marking Details_GR#4.dwg, 24 TRAFFIC SIGNS & PAVEMENT MARKING DETAILS, 10/5/2011 11:09:06 AM, 1:1