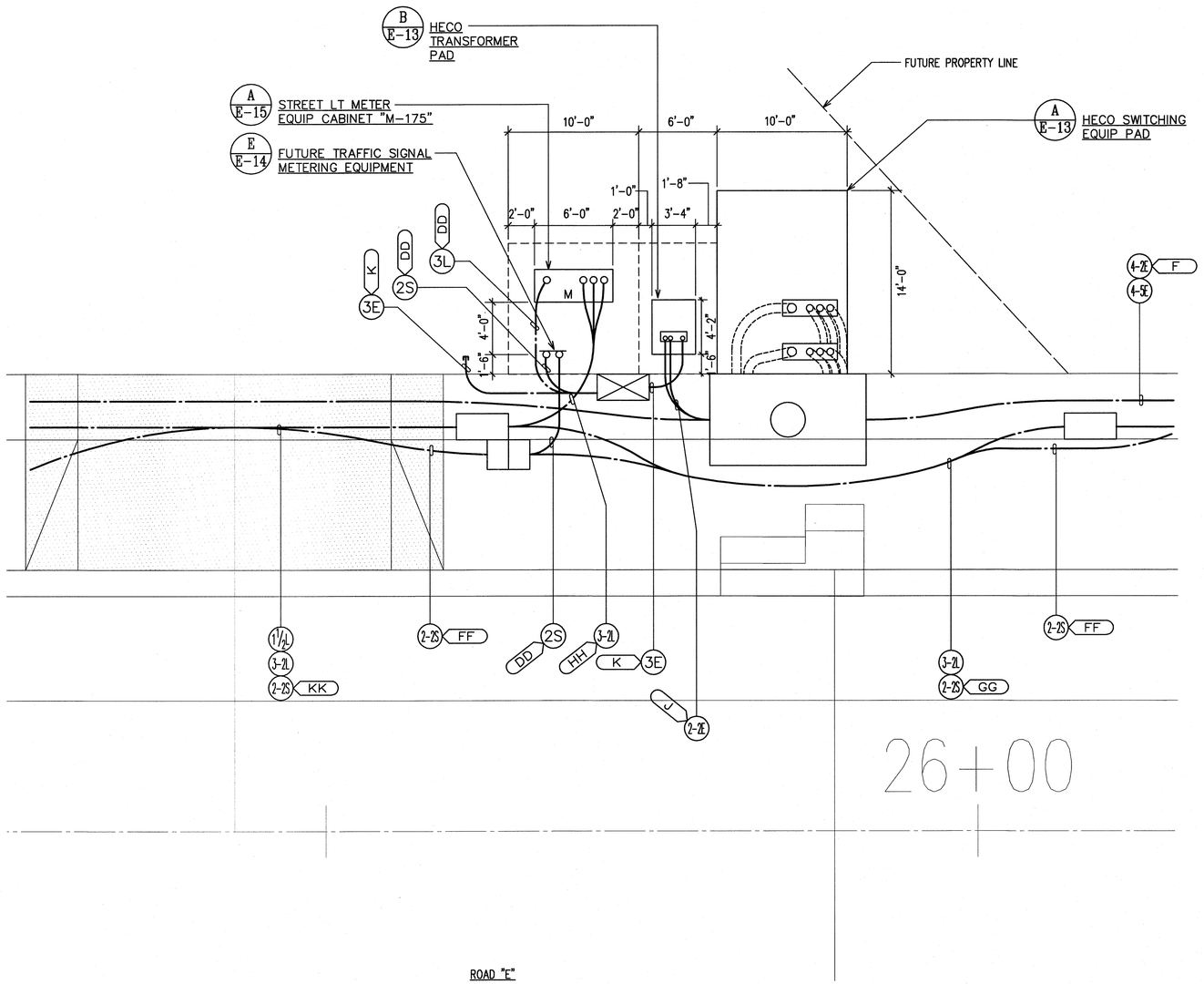

NORTH

A E-12 ELECTRICAL EQUIPMENT LAYOUT
SCALE: 1"=10'

DRAWING REVIEW

Reviewed for HECO's Facilities Only

Date 5/24/11 By

Customer Installations Department
Hawaiian Electric Company, Inc.

HECO's review of these drawings shall in no way relieve the Customer, its Consultant, its Contractor or anyone acting on the Customer's behalf from the responsibility for engineering, design, materials and any other liability associated with this project.

APPROVED BY:

HAWAIIAN ELECTRIC COMPANY, INC. DATE

10' 5' 0 10' 20' 30'

SCALE: 1"=10'

GRAPHIC SCALE

GARY I. FUNASAKI
LICENSED PROFESSIONAL ENGINEER
No. 4195-E
HAWAII, U.S.A.

17 MAR 2011

THIS WORK WAS PREPARED BY ME OR UNDER MY SUPERVISION. CONSTRUCTION OF THIS PROJECT WILL BE UNDER MY OBSERVATION. LICENSE EXPIRATION DATE: 04/30/12

REVISION DATE	DESCRIPTION	MADE BY	APPROVED

cp&e Community Planning and Engineering, Inc.
Engineering Design | Construction Management | Infrastructure Planning
1100 Alakea Street, Sixth Floor Honolulu, Hawaii

EAST KAPOLEI II DEVELOPMENT
ROAD "E"

HONOULIULI, EWA, OAHU, HAWAII
(DPP SUBD. FILE NO. 2010/SUB-115)
OWNER: DEPARTMENT OF LAND AND NATURAL RESOURCES
DEVELOPER: DEPARTMENT OF HAWAIIAN HOME LANDS
TAX MAP KEY: 9-1-17: Portion 110

ELECTRICAL EQUIPMENT LAYOUT

DRAWN BY:	ENGINEER: GF	CHECKED BY: GF

APPROVED:

CHIEF, TRAFFIC SIGNALS AND TECHNOLOGY, D.T.S. DATE 5/3/11
CHIEF, TRAFFIC REVIEW BRANCH, D.P.P. DATE 12/8/11
SANDWICH ISLES COMMUNICATIONS, INC. DATE 6-14-11
CHIEF, MECHANICAL/ELECTRICAL DIVISION, D.D.C. DATE 6/12/2011

DWG. NO. E-12 SHEET 44 OF 61 SHEETS

FILE	POCKET	FOLDER	NO.

LAST SAVE: 03/17/11 @ 08:56:08 BY: HN PLOT SC 1=0.000000
Z:\WALKER\PROJECTS\2004\12120\2004-12120-ROAD E\Drawings\ INFRA XBASE EXB ROAD E(6-27-10) XBASE EXB _JRN_2908421_BACKGROUND _JRN_2908421_ELEC-ALL=_JRN_2908421_ELEC-ALL