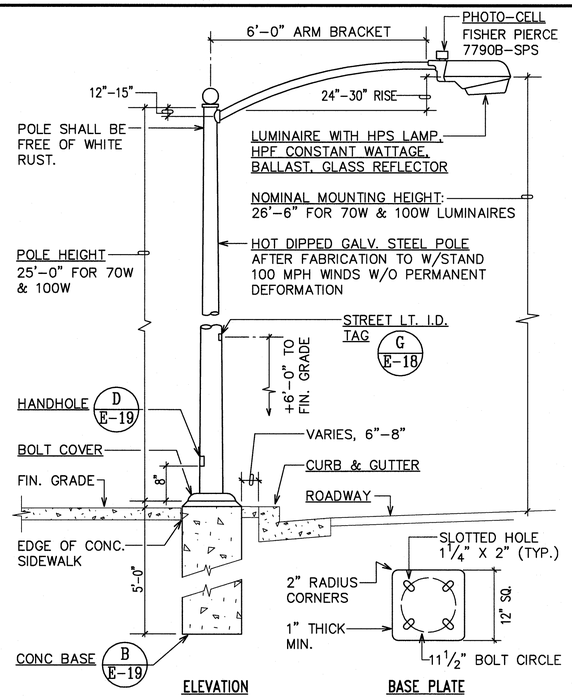

A/E-19 STREET LIGHT STANDARD

NOT TO SCALE

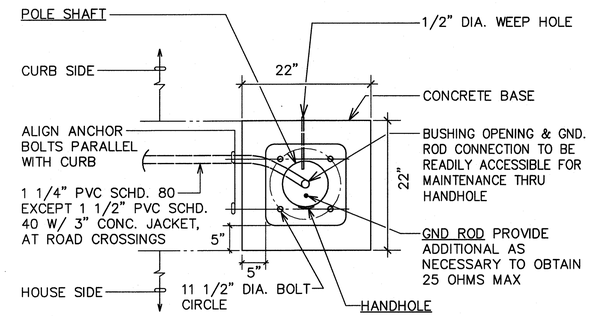

C/E-19 CONCRETE BASE PLAN

NOT TO SCALE

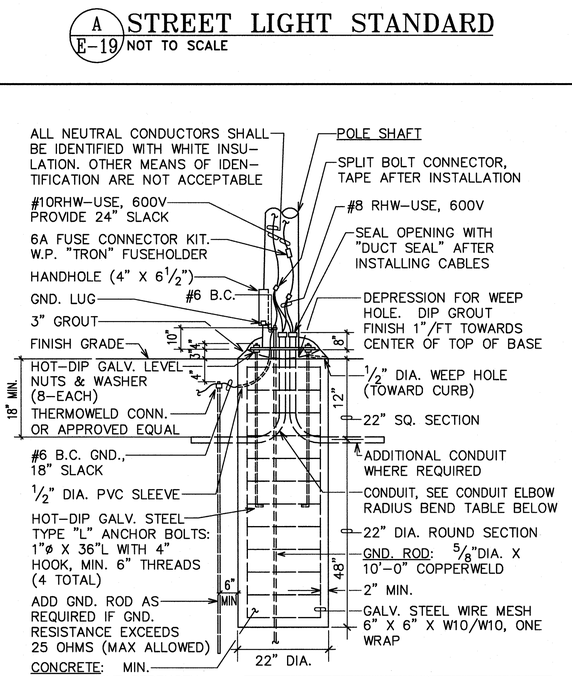

NOTE: SEE DETAIL C/E-19

CONDUIT ELBOW RADIUS BEND TABLE			
PVC SCHEDULE 40 OR 80 ELBOW			
NOMINAL CONDUIT SIZE	1 1/4"	1 1/2"	2"
MINIMUM RADIUS BEND	8"	10"	12"

B/E-19 CONCRETE BASE ELEVATION

NOT TO SCALE

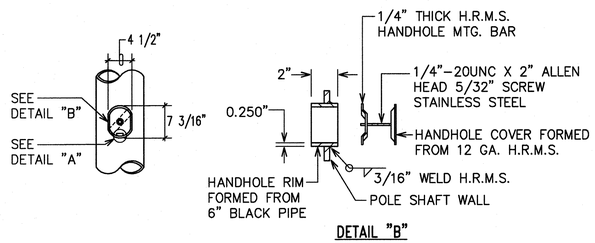

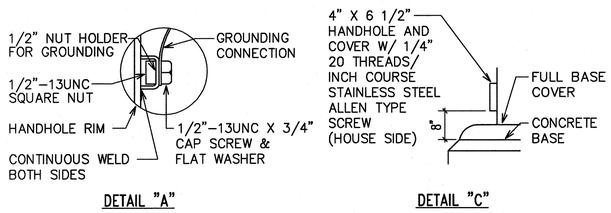

D/E-19 STREET LIGHT STANDARD HANDHOLE DETAILS

NOT TO SCALE

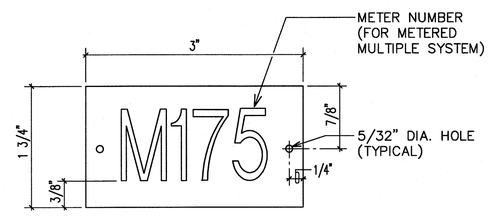

NOTES:

1. USE 2 PLY PLASTIC – BLACK, WHITE. THICKNESS: BLACK CAP SHEET – 0.010"; WHITE BASE SHEET – 0.052".
2. NUMBER SIZE SHALL BE 1" HIGH AND ENGRAVED 1/8" WIDE, WHITE IN COLOR (NUMBER AS REQUIRED).
3. ATTACH TO METER ENCLOSURE WITH NO. 8 STAINLESS STEEL DRIVE SCREWS.
4. NUMBERS ARE INSCRIBED BY CUTTING THROUGH "BLACK CAP SHEET" TO EXPOSE "WHITE LETTERS".

E/E-19 METER & EQUIPMENT ENCLOSURE I.D. TAG DETAIL – METERED SYSTEM

N.T.S.

REVISION DATE	DESCRIPTION	MADE BY	APPROVED

cp&e Community Planning and Engineering, Inc.
Engineering Design | Construction Management | Infrastructure Planning
1100 Alakea Street, Sixth Floor Honolulu, Hawaii

EAST KAPOLEI II DEVELOPMENT ROAD "E"

HONOULIULI, EWA, OAHU, HAWAII
(DPP SUBD. FILE NO. 2010/SUB-115)
OWNER: DEPARTMENT OF LAND AND NATURAL RESOURCES
DEVELOPER: DEPARTMENT OF HAWAIIAN HOME LANDS
TAX MAP KEY: 9-1-17: Portion 110

STREET LIGHT DETAILS II & MISCELLANEOUS DETAILS

GARY I. FUNASAKA LICENSED PROFESSIONAL ENGINEER No. 4195-E HAWAII, U.S.A.
5 MAY 2011
THIS WORK WAS PREPARED BY ME OR UNDER MY SUPERVISION. CONSTRUCTION OF THIS PROJECT WILL BE UNDER MY OBSERVATION. LICENSE EXPIRATION DATE: 04/30/12

DRAWN BY:	ENGINEER: GF	CHECKED BY: GF

APPROVED:

DATE — CHIEF, TRAFFIC REVIEW BRANCH, D.P.P. — DATE 12-4-11

DATE — CHIEF, MECHANICAL/ELECTRICAL DIVISION, D.D.C.A. — DATE 5/12/2011

DWG. NO. E-19 SHEET 51 OF 61 SHEETS

FILE	POCKET	FOLDER	NO.

LAST SAVE: 03/17/11 @ 08:56:56 BY: INK PLOT SC: 12.000000=12.000000
Z:\KAO\PROJECTS\2050401\01B_2050401_SELT-04.02