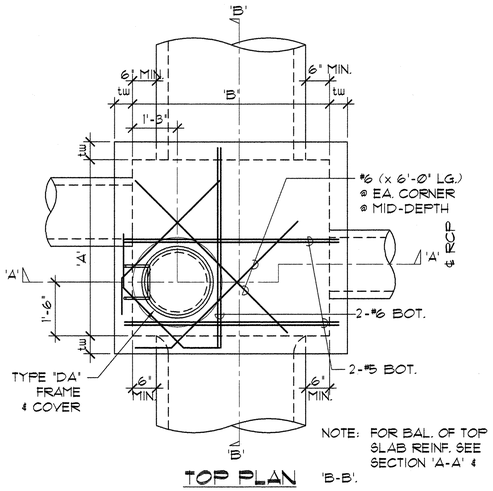

TOP PLAN

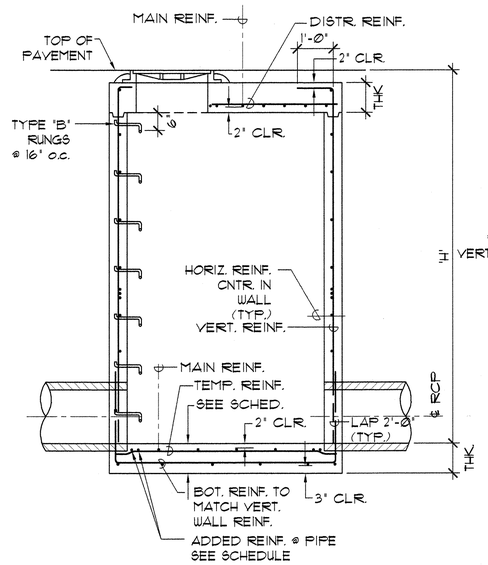

SECTION 'A-A'

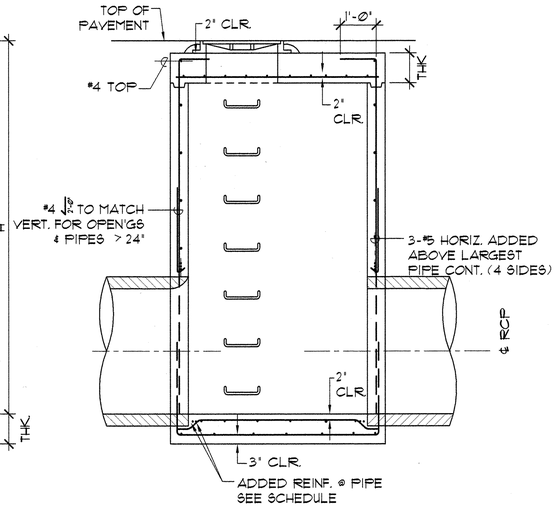

SECTION 'B-B'

SPECIAL DRAIN MANHOLE CAST-IN-PLACE DETAIL

SC: 1/2"=1'-0"

A / S-2

SLAB REINFORCING SCHEDULE

SDMH

MARK	"H" MAX.	"A"	"B"	tw	TOP SLAB REINF. THK.	TOP SLAB REINF. TOP MAIN	TOP SLAB REINF. REINF. DISTRIB.	INVERT SLAB REINF. THK.	INVERT SLAB REINF. MAIN	INVERT SLAB REINF. TEMP.
A-2 *	9.19'	4'-0"	6'-6"	8"	10"	#5@6"o.c.	#5@10"o.c.	12"	#4@9"o.c.	#4@9"o.c.
A-4	7.13'	4'-0"	4'-8"	8"	12"	6@6"o.c.	#5@8"o.c.	10"	#4@10"o.c.	#4@10"o.c.
B-1 *	11.76'	4'-0"	7'-0"	8"	10"	#5@6"o.c.	#5@10"o.c.	14"	#5@12"o.c.	#5@12"o.c.
E-4, E-6	8.9'	5'-3"	5'-3"	8"	12"	6@6"o.c.	#5@8"o.c.	10"	#4@10"o.c.	#4@10"o.c.
E-7	14.48'	6'-6"	7'-0"	8"	12"	#6@7"o.c.	#5@10"o.c.	12"	#4@9"o.c.	#4@9"o.c.
E-8	11.59'	4'-0"	6'-6"	8"	10"	#5@6"o.c.	#5@10"o.c.	14"	#5@12"o.c.	#5@12"o.c.
E-10	9.2'	5'-10"	6'-6"	8"	12"	#6@7"o.c.	#5@10"o.c.	10"	#4@10"o.c.	#4@10"o.c.

* CONSTRUCT WITHOUT TOP SLAB.

WALL REINFORCING SCHEDULE

MARK	A-2, E-8, E-10	A-4	B-1	E4, E-6	E-7	MARK
tw	8"	8"	8"	8"	8"	tw
VERT. REINF.	#4@12"o.c.	#4@12"o.c.	#4@12"o.c.	#4@12"o.c.	#4@12"o.c.	VERT. REINF.
"H"	HORIZ. REINF. (CENTERED IN WALL)					"H"
0'-0" TO 2'-0"	#5@10"o.c.	#4@9"o.c.	5@8"o.c.	#5@12"o.c.	#5@9"o.c.	0'-0" TO 2'-0"
2'-0" TO 3'-0"	#5@8"o.c.	↓	↓	#5@8"o.c.	#5@6"o.c.	2'-0" TO 3'-0"
3'-0" TO 4'-0"	↓	↓	↓	↓	↓	3'-0" TO 4'-0"
4'-0" TO 5'-0"	↓	↓	↓	↓	↓	4'-0" TO 5'-0"
5'-0" TO 6'-0"	#5@7"o.c.	↓	#5@6"o.c.	↓	↓	5'-0" TO 6'-0"
6'-0" TO 7'-0"	↓	↓	↓	↓	↓	6'-0" TO 7'-0"
7'-0" TO 8'-0"	↓	↓	↓	↓	↓	7'-0" TO 8'-0"
8'-0" TO 9'-0"	↓		↓		#5@4"o.c.	8'-0" TO 9'-0"
>9'-0"	#5@6"o.c.		↓		↓	>9'-0"

ADDED REINF. @ PIPE	
PIPE SIZE	REINF.
36"ϕ	1-#5
42"ϕ	2-#5
48"ϕ	2-#5
54"ϕ	2-#5
60"ϕ	2-#5

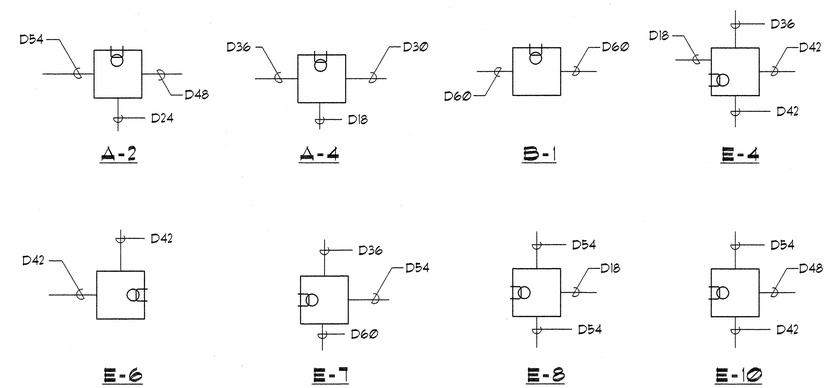

SCHEMATIC PLAN

N.T.S.

C / S-2

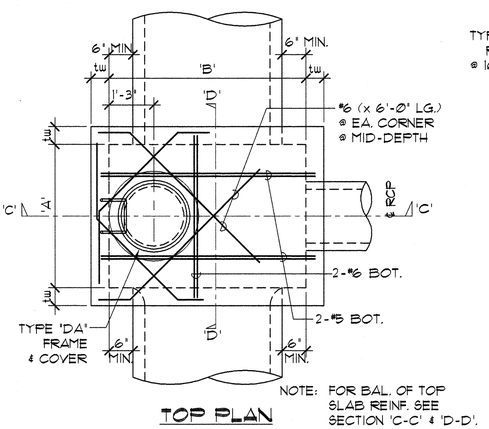

TOP PLAN

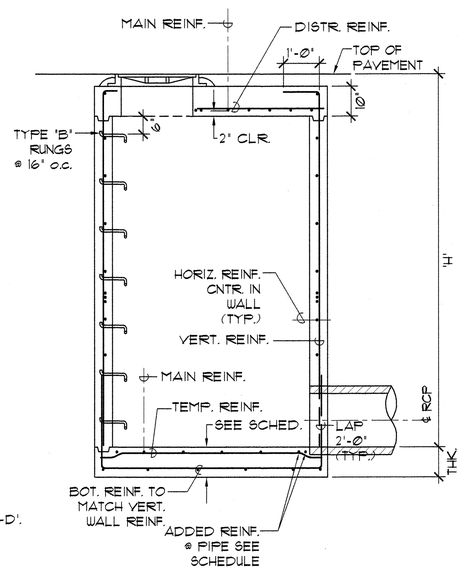

SECTION 'C-C'

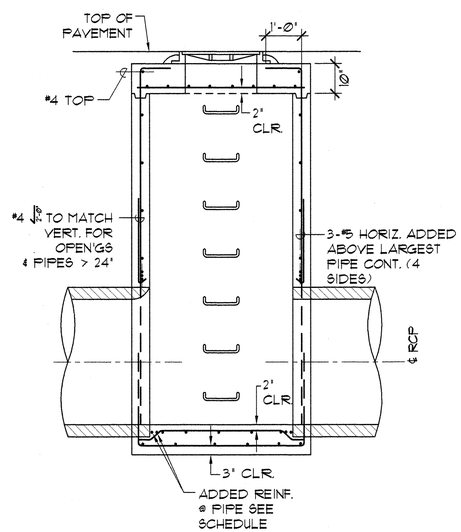

SECTION 'D-D'

SPECIAL DRAIN MANHOLE CAST-IN-PLACE DETAIL

SC: 1/2"=1'-0"

B / S-2

REVISION DATE	DESCRIPTION	MADE BY	APPROVED

Community Planning and Engineering, Inc.
Engineering Design | Construction Management | Infrastructure Planning
1100 Alakea Street, Sixth Floor Honolulu, Hawaii

EAST KAPOLEI II DEVELOPMENT ROAD "E"

HONOULIULI, EWA, OAHU, HAWAII
(DPP SUBD. FILE NO. 2010/SUB-115)
OWNER: DEPARTMENT OF LAND AND NATURAL RESOURCES
DEVELOPER: DEPARTMENT OF HAWAIIAN HOME LANDS
TAX MAP KEY: 9-1-17: PORTION 110

THOMAS Y. TANIMURA LICENSED PROFESSIONAL ENGINEER No. 4926-S HAWAII, U.S.A.

04/30/12
Expiration Date of the License

THIS WORK WAS PREPARED BY ME OR UNDER MY SUPERVISION AND CONSTRUCTION OF THIS PROJECT WILL BE UNDER MY OBSERVATION.

SPECIAL DRAIN MANHOLE CAST-IN-PLACE DETAILS

DRAWN BY: HM	ENGINEER: TT	CHECKED BY: TT

APPROVED:

11/24/12
CHIEF, CIVIL ENGINEERING BRANCH, DPP DATE

DWG. NO. S-2A SHEET 26a OF 61 SHEETS

FILE	POCKET	FOLDER	NO.