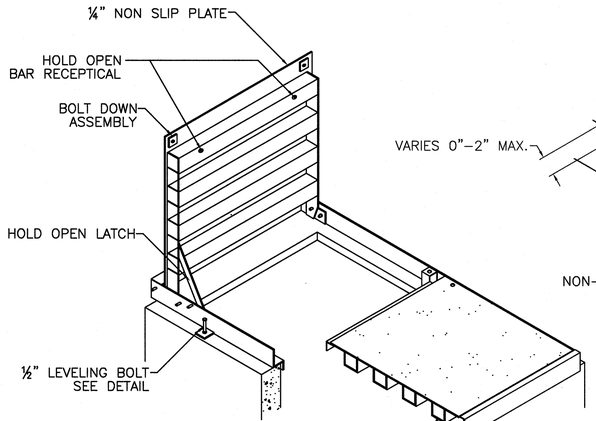

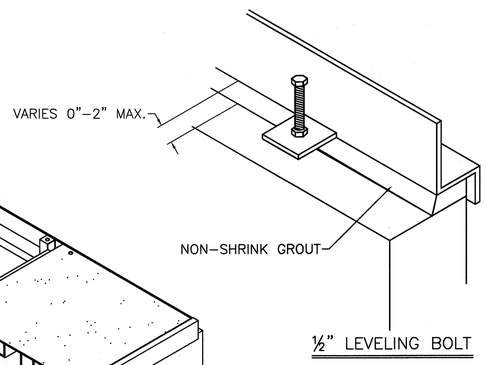

½" LEVELING BOLT

NOTES:
1. CONTRACTOR TO INSTALL COVER
2. 2" MAXIMUM HEIGHT ADJUSTMENT W/ ½" LEVELING BOLT, IF NECESSARY
3. CONTRACTOR TO FILL SPACE BETWEEN COVER & TOP OF WALL W/ NON–SHRINK GROUT AFTER ADJUSTMENT.

HAWAII PRECAST, INC.
P.O. BOX 160 KAILUA–KONA, HI 96745
Ph: (808) 326–7730 Fax: (808) 329–9026

3x5 HANDHOLE COVER

SCALE: NONE	DRAWN BY:	CHECKED BY:
DATE: 08/15/08	SHEET: 2 OF 3	

UH 3x5 COVER

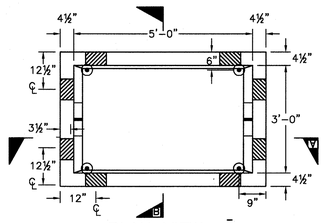

PLAN VIEW

	WEIGHT (lbs.)	CONCRETE (C.Y.)
BASE	3,900	0.87
ROOF	1,800	0.38
RISER	600	0.15

REINFORCING = 163 lbs. (#4)
65 lbs. (#5)
60 lbs. (#6)

1" RAMNEK = 13 ea.

NOTES:
1. CONCRETE SHALL HAVE A COMPRESSIVE STRENGTH OF 5,000 P.S.I. AT 28 DAYS.
2. ALL REINFORCING STEEL SHALL BE NEW STOCK DEFORMED BARS CONFORMING TO ASTM A706W GRADE 60 UNLESS OTHERWISE NOTED. PLACEMENT OF REBARS SHALL BE IN ACCORDANCE WITH ACI–315 & ACI–318. ALL BARS SHALL BE CLEAN OF RUST, GREASE OR OTHER MATERIALS LIKELY TO IMPAIR BOND. ALL BENDS SHALL BE MADE COLD.
3. ALL REINFORCING BARS SHALL BE ACCURATELY & SECURELY PLACED. ALL REINFORCING SHALL BE LAPPED 40 BAR DIAMETERS OR EIGHTEEN (18) INCHES, WHICHEVER IS GREATER AT SPLICES. ALL SPLICES SHALL BE MADE AWAY FROM POINT OF MAXIMUM STRESS.
4. CONCRETE COVER TO REINFORCING STEEL SHALL BE 1–1/2" MINIMUM.
5. ALLOW CONCRETE TO CURE A MINIMUM OF 7 DAYS PRIOR TO SHIPPING.
6. STRUCTURAL DESIGN CRITERIA:
   A. AASHTO HS20–44 LOADING
   B. ACTIVE EARTH PRESSURE ABOVE THE WATER TABLE = 40 PCF
   C. SOIL UNIT WEIGHT = 110 PCF
7. MANHOLE SHALL NOT BE PLACED BELOW THE WATER TABLE.

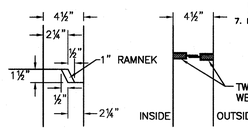

JOINT DETAIL
NTS

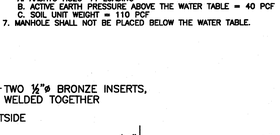

GROUND
NTS

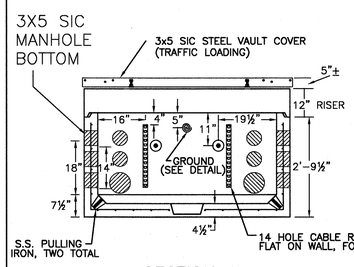

SECTION A

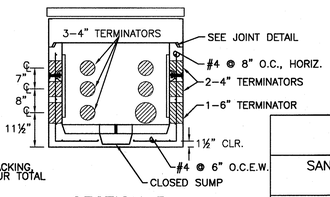

SECTION B

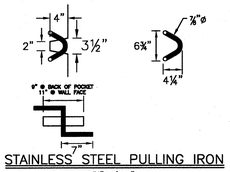

STAINLESS STEEL PULLING IRON
SCALE: ¾"=1'–0"

HAWAII PRECAST, INC.
P.O. BOX 160 KAILUA–KONA, HI 96745
Ph: (808) 326–7730 Fax: (808) 329–9026

SANDWICH ISLES COMMUNICATIONS, INC.
3'0" X 5'0" HANDHOLE

SCALE: ½"=1'–0"	DRAWN BY:	CHECKED BY:
DATE: 11/10/00REV.	SHEET: 1 OF 1	

UH 3x5

FOR REFERENCE ONLY

REVISION DATE	DESCRIPTION	MADE BY	APPROVED

cp&e Community Planning and Engineering, Inc.
Engineering Design | Construction Management | Infrastructure Planning
1100 Alakea Street, 26th Floor Honolulu, Hawaii

EAST KAPOLEI II DEVELOPMENT ROAD "E"

HONOULIULI, EWA, OAHU, HAWAII
(DPP SUBD. FILE NO. 2010/SUB-115)
OWNER: DEPARTMENT OF LAND AND NATURAL RESOURCES
DEVELOPER: DEPARTMENT OF HAWAIIAN HOME LANDS
TAX MAP KEY: 9-1-17: Portion 110

SIC REFERENCE DRAWINGS I

DRAWN BY:	ENGINEER: CF	CHECKED BY: CF

APPROVED:

DATE DATE

6-14-11
SANDWICH ISLES COMMUNICATIONS, INC. DATE DATE DATE

THIS WORK WAS PREPARED BY ME OR UNDER MY SUPERVISION. CONSTRUCTION OF THIS PROJECT WILL BE UNDER MY OBSERVATION. LICENSE EXPIRATION DATE: 04/30/12

DWG. NO. E-22 SHEET 54 OF 61 SHEETS

FILE	POCKET	FOLDER	NO.

LAST SAVE: 02/17/11 @ 08:57:18 BY: RH PLOT SC 1"=0"=1'
L:\SANDWICH\PROJECTS\2_DRAWINGS\Permit Plans\E_UH3X5 COVER=\X_UH3X5 COVER X_UH3X5 BOX DETAIL (NEW)=\X_UH3X5 BOX DETAIL (NEW)