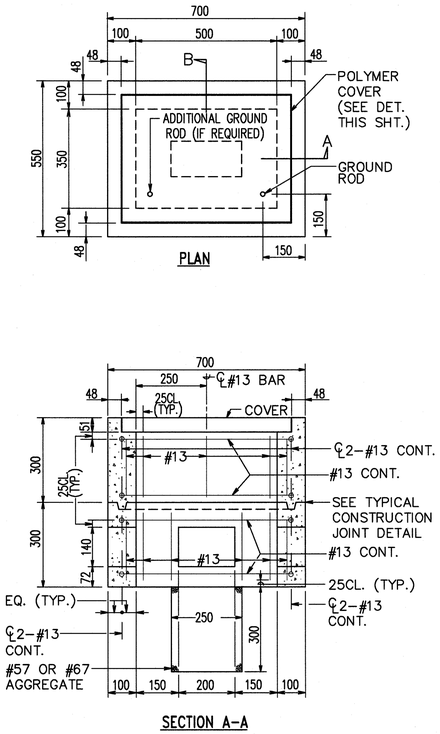

A / E-20 TYPE "A" PULLBOX (OLD TYPE "B")

NOT TO SCALE

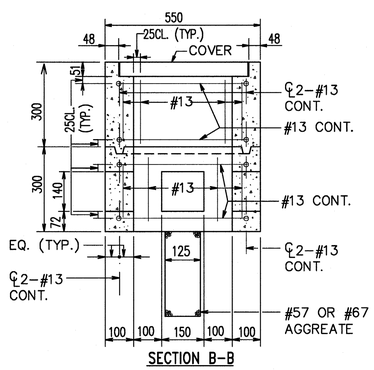

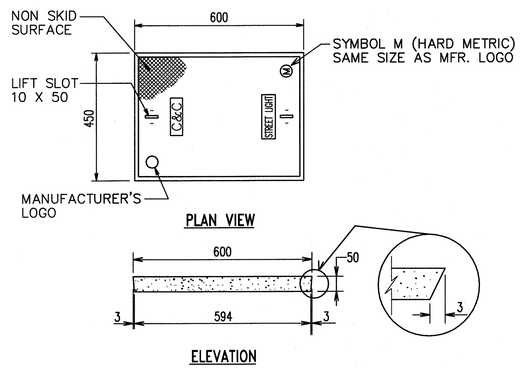

B / E-20 POLYMER CONCRETE COVER

NOT TO SCALE

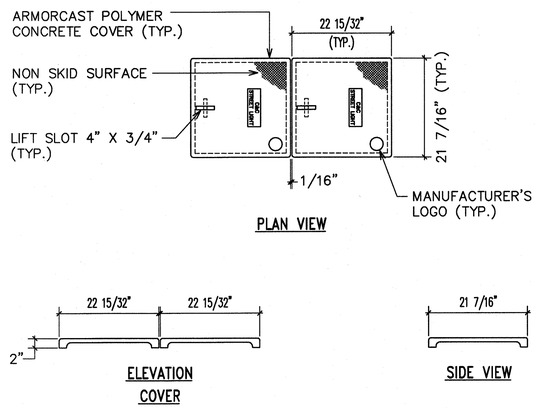

NOTES:

1. SUBMIT SHOP DRAWING FOR APPROVAL BEFORE PURCHASING POLYMER CONCRETE COVERS.
2. TYPICAL 435TB PULLBOX, REFER TO HTCO STANDARD DRAWING #34056.

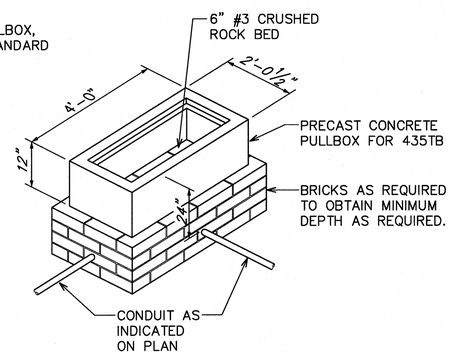

C / E-20 STREET LIGHT PULLBOX "SLD-4"

NOT TO SCALE

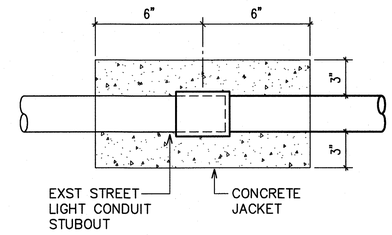

D / E-20 TYP CONNECTION TO EXST CONDUIT STUBOUT DETAIL

NOT TO SCALE

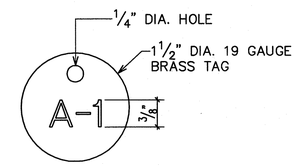

NOTES:

1. NUMBER SIZE SHALL BE 3/8" HIGH AND PUNCHED ON BRASS TAG.
2. ATTACH TO CIRCUIT CABLES WITH NYLON WEATHER RESISTANT LOCKING CABLE TIES, 3/16" WIDE.

E / E-20 STREET LIGHT CIRCUIT CABLE I.D. TAG DETAIL

NOT TO SCALE

REVISION DATE	DESCRIPTION	MADE BY	APPROVED

cp&e **Community Planning and Engineering, Inc.**
Engineering Design | Construction Management | Infrastructure Planning
1100 Alakea Street, 26th Floor Honolulu, Hawaii

EAST KAPOLEI II DEVELOPMENT
ROAD "E"
HONOULIULI, EWA, OAHU, HAWAII
(DPP SUBD. FILE NO. 2010/SUB-115)
OWNER: DEPARTMENT OF LAND AND NATURAL RESOURCES
DEVELOPER: DEPARTMENT OF HAWAIIAN HOME LANDS
TAX MAP KEY: 9-1-17: Portion 110

STREET LIGHT PULLBOX & DETAILS

GARY I. FUNASAKI LICENSED PROFESSIONAL ENGINEER No. 4195-E HAWAII, U.S.A.

5 MAY 2011

THIS WORK WAS PREPARED BY ME OR UNDER MY SUPERVISION. CONSTRUCTION OF THIS PROJECT WILL BE UNDER MY OBSERVATION. LICENSE EXPIRATION DATE: 04/30/12

DRAWN BY:	ENGINEER: GF	CHECKED BY: GF

APPROVED:

DATE — CHIEF, TRAFFIC REVIEW BRANCH, D.P.P. — DATE 12/28/11

DATE — CHIEF, MECHANICAL/ELECTRICAL DIVISION, D.D.C. — DATE 5/12/2011

FILE	POCKET	FOLDER	NO.

DWG. NO. **E-20** SHEET 52 OF 61 SHEETS

LAST SAVED: 03/17/11 ● 08:57:01 BY: IN PLOT SC 1"=0"=1'
Z:\CAD\PROJECTS\2009401\F20_2009401_SLD_PB04.