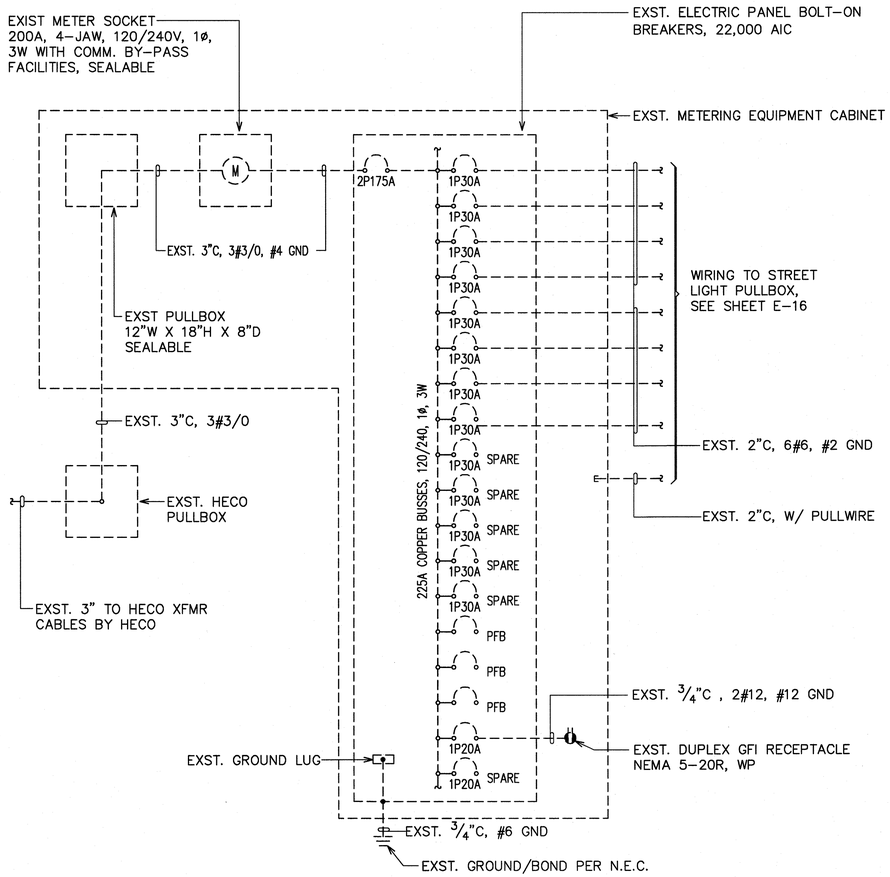

A / E-14 MODIFIED STREET LIGHTING SYSTEM "M-168" ONE-LINE DIAGRAM

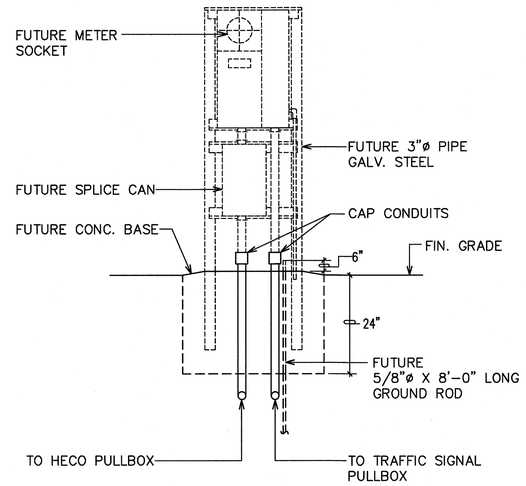

B / E-14 FUTURE TRAFFIC SIGNAL METERING EQUIPMENT ELEVATION

NOT TO SCALE

REVISION DATE	DESCRIPTION	MADE BY	APPROVED

Community Planning and Engineering, Inc.
Engineering Design | Construction Management | Infrastructure Planning
1100 Alakea Street, Sixth Floor — Honolulu, Hawaii

EAST KAPOLEI II DEVELOPMENT
ROAD "E"
HONOULIULI, EWA, OAHU, HAWAII
(DPP SUBD. FILE NO. 2010/SUB-115)
OWNER: DEPARTMENT OF LAND AND NATURAL RESOURCES
DEVELOPER: DEPARTMENT OF HAWAIIAN HOME LANDS
TAX MAP KEY: 9-1-17: Portion 110

MODIFIED STREET LIGHTING SYSTEM "M-168"
ONE-LINE DIAGRAM & MISCELLANEOUS DETAILS

DRAWN BY: | ENGINEER: GF | CHECKED BY: GF

APPROVED:

DATE — CHIEF, TRAFFIC REVIEW BRANCH, D.P.P. — DATE 12/8/11

DATE — CHIEF, MECHANICAL/ELECTRICAL DIVISION, D.D.C. — DATE 5/12/2011

GARY I. FUNASAKI
LICENSED PROFESSIONAL ENGINEER
No. 4195-E
HAWAII, U.S.A.
5 MAY 2011

THIS WORK WAS PREPARED BY ME OR UNDER MY SUPERVISION. CONSTRUCTION OF THIS PROJECT WILL BE UNDER MY OBSERVATION. LICENSE EXPIRATION DATE: 04/30/12

DWG. NO. E-14 SHEET 46 OF 61 SHEETS

FILE	POCKET	FOLDER	NO.

LAST SAVE: 03/17/11 @ 08:56:22 BY: RN PLOT SC: 1"=0"=1'
J:\2006\2006-0270\DRAWING\10-5_SHEET_SUB-Design