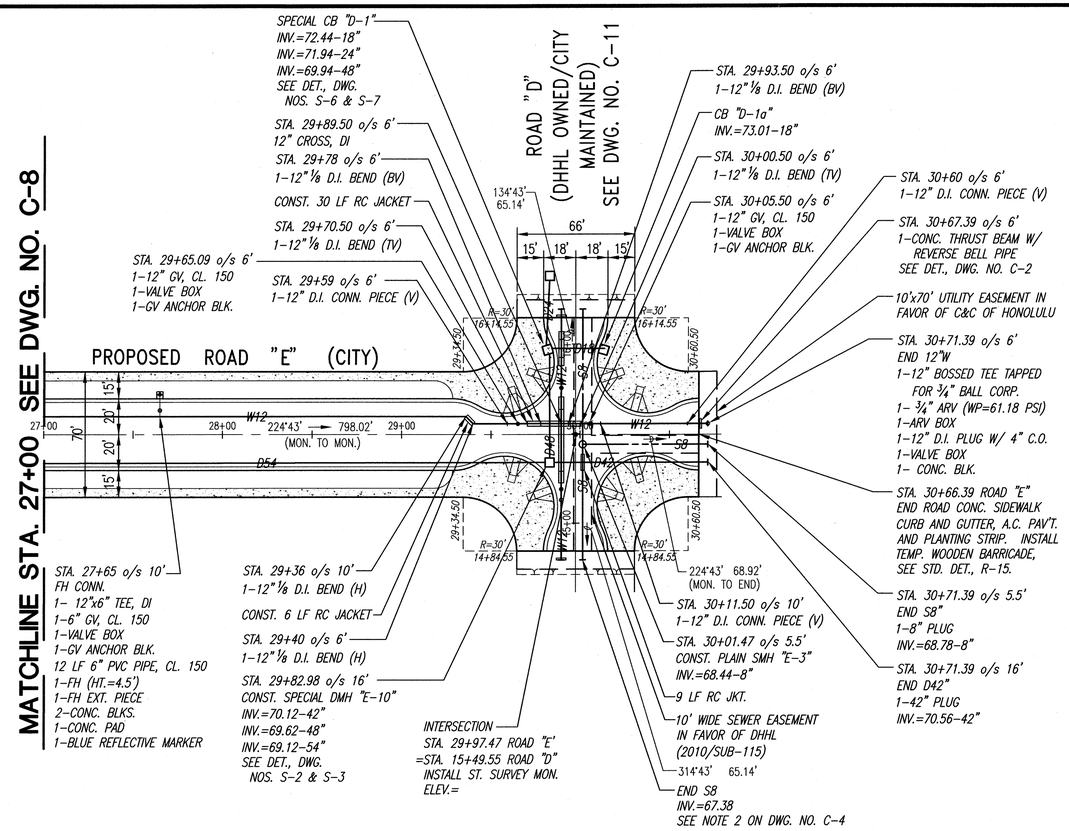

PLAN

SCALE: 1"=40'

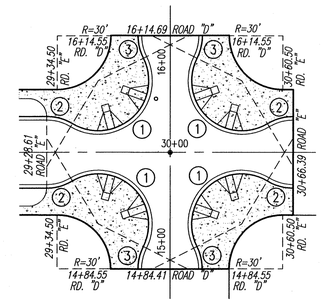

CURB DATA			
CURVE	1	2	3
△	147°46'06"	31°00'10"	26°45'56"
△/2	73°53'03"	15°30'05"	13°22'58"
R	28.00'	28.00'	28.00'
T	96.91'	7.77'	6.66'
C	53.80'	14.97'	12.96'
Lc	72.21'	15.15'	13.08'

LEGEND

—— - - ——	CENTERLINE
—— - - ——	PROPERTY LINE
—W16—	WATER W/ SIZE
—D18—	DRAIN LINE W/ SIZE
—S8—	SEWER LINE W/ SIZE
DC	DEFLECTION COUPLING
CP	CONNECTOR PIECE

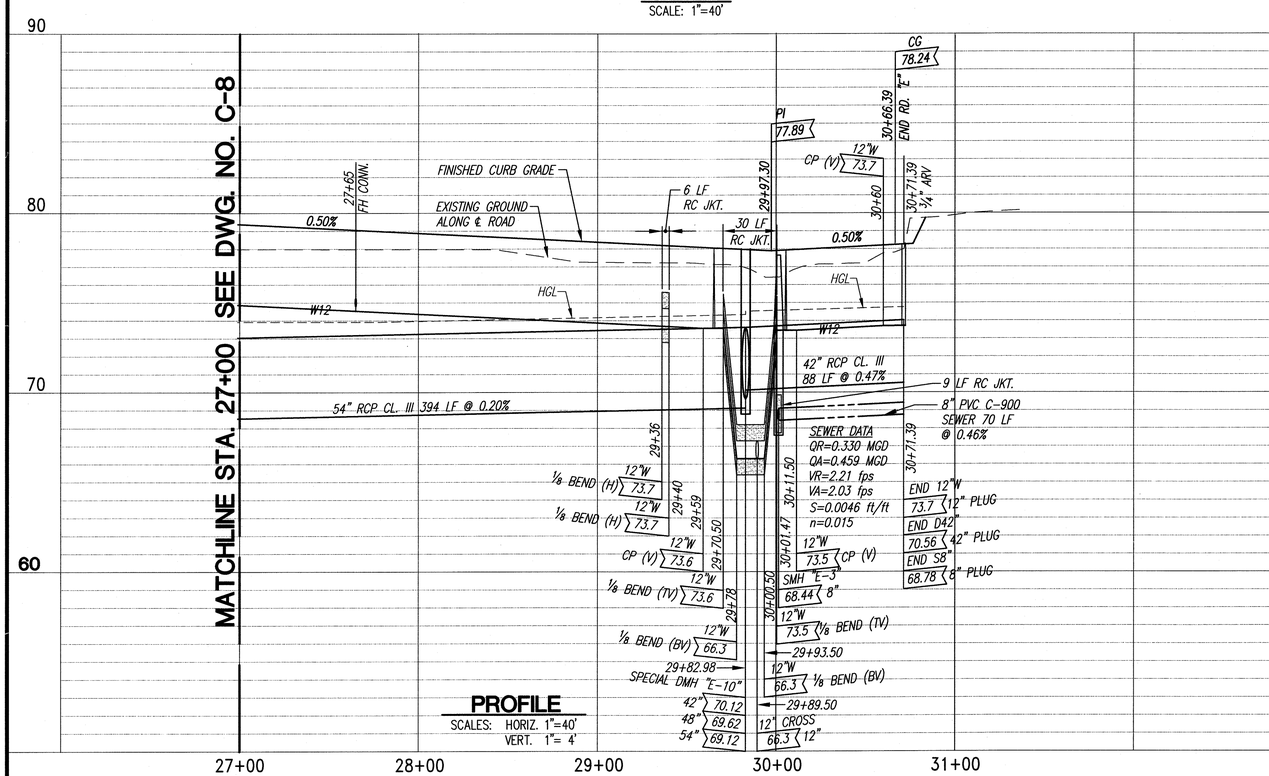

PROFILE

SCALES: HORIZ. 1"=40'
VERT. 1"= 4'

"PROPOSED CITY ROAD"

Horizontal: 40 20 0 40 80
Vertical: 4 3 2 1 0 4 8
Graphic Scale in Feet

ANSON M. MURAYAMA
LICENSED PROFESSIONAL ENGINEER
No. 6975-C
HAWAII, U.S.A.

THIS WORK WAS PREPARED BY ME OR UNDER MY SUPERVISION. CONSTRUCTION OF THIS PROJECT WILL BE UNDER MY OBSERVATION. LICENSE EXPIRATION DATE: 04/30/12

REVISION DATE	DESCRIPTION	MADE BY	APPROVED

cp&e Community Planning and Engineering, Inc.
Engineering Design | Construction Management | Infrastructure Planning
1100 Alakea Street, Sixth Floor Honolulu, Hawaii

EAST KAPOLEI II DEVELOPMENT ROAD "E"

HONOULIULI, EWA, OAHU, HAWAII
(DPP SUBD. FILE NO. 2010/SUB-115)
OWNER: DEPARTMENT OF LAND AND NATURAL RESOURCES
DEVELOPER: DEPARTMENT OF HAWAIIAN HOME LANDS
TAX MAP KEY: 9-1-17: Portion 110

PLAN AND PROFILE ROAD "E" STA. 27+00 TO END

DRAWN BY: LYLT | ENGINEER: SS, FJC | CHECKED BY: AMM

APPROVED:
CHIEF, CIVIL ENGINEERING BRANCH, D.P.P. — DATE 1/24/12
CHIEF, WASTEWATER BRANCH, D.P.P. — DATE 12/2/11 (FOR CONFORMANCE WITH CITY STANDARDS ONLY)
CHIEF, TRAFFIC REVIEW BRANCH, D.P.P. — DATE
MANAGER AND CHIEF ENGINEER, B.W.S. — DATE 11-29-11 (FOR WORK AFFECTING BWS FACILITIES IN CITY/STATE RIGHT-OF-WAY AND BWS EASEMENTS ONLY)
CITY & COUNTY OF HONOLULU

DWG NO. C-9 SHEET 10 OF 61 SHEETS

FILE	POCKET	FOLDER	NO.

P:\Land Projects\DHHL East Kapolei II\Road E\Construction Drawings\Government Review #4\10 P&P RD E STA 27+00 TO END_GR#4.dwg, 10 P&P RD E STA 27+00 TO END, 11/14/2011 10:01:59 AM, 1:1