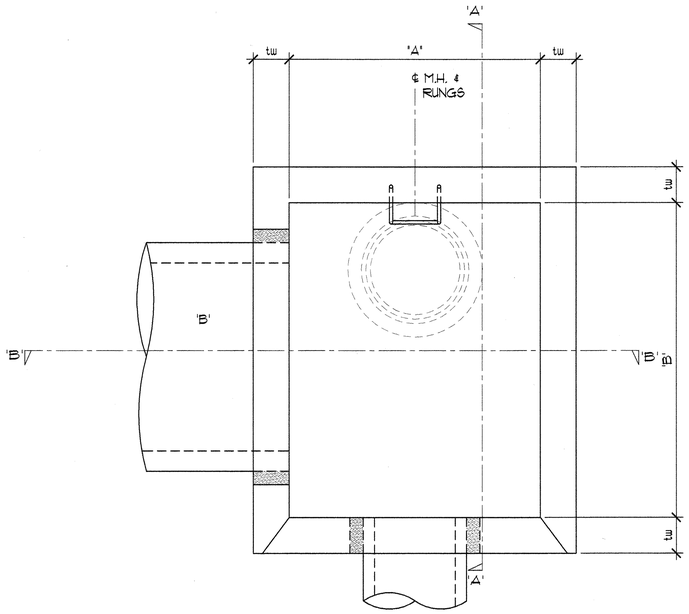

PLAN

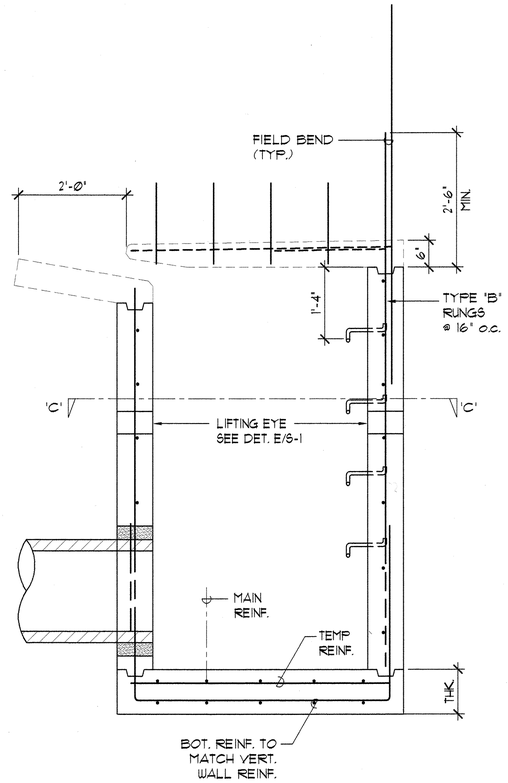

SECT. 'A-A'

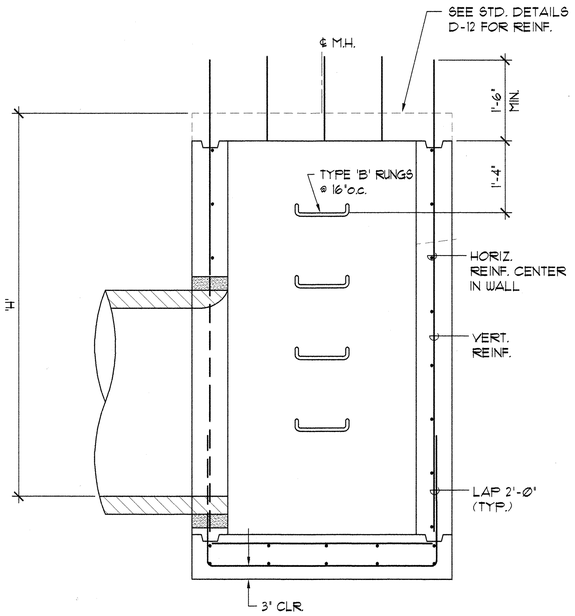

SECT. 'B-B'

SPECIAL TYPE 'D' CATCH BASIN PRECAST DETAILS

SC: 3/4" = 1'-Ø"

S-7

NOTES:

1) TOP SLAB & GUTTER TO BE CAST-IN-PLACE IN FIELD. FOLLOW REINF. & DETAILS SHOWN ON SHEET S-6.
2) FOR DIMENSIONS & REINF. FOLLOW SCHEDULES SHOWN ON SHEET S-6.
3) SEE SHEET S-1 FOR GENERAL NOTES & TYPICAL DETAILS.

THOMAS Y. TANIMURA
LICENSED PROFESSIONAL ENGINEER
No. 4926-S
HAWAII, U.S.A.

04/30/12
Expiration Date of the License

THIS WORK WAS PREPARED BY ME OR UNDER MY SUPERVISION AND CONSTRUCTION OF THIS PROJECT WILL BE UNDER MY OBSERVATION.

REVISION DATE	DESCRIPTION	MADE BY	APPROVED

cp&e **Community Planning and Engineering, Inc.**
Engineering Design | Construction Management | Infrastructure Planning
1100 Alakea Street, Sixth Floor Honolulu, Hawaii

EAST KAPOLEI II DEVELOPMENT ROAD "E"

HONOULIULI, EWA, OAHU, HAWAII
(DPP SUBD. FILE NO. 2010/SUB-115)
OWNER: DEPARTMENT OF LAND AND NATURAL RESOURCES
DEVELOPER: DEPARTMENT OF HAWAIIAN HOME LANDS
TAX MAP KEY: 9-1-17: PORTION 110

SPECIAL TYPE 'D' CATCH BASIN PRECAST DETAILS

DRAWN BY: HM	ENGINEER: TT	CHECKED BY: TT

APPROVED:

M. 1/24/12
CHIEF, CIVIL ENGINEERING BRANCH, D.P.P. DATE

DWG. NO. **S-7** SHEET 31 OF 61 SHEETS

FILE	POCKET	FOLDER	NO.