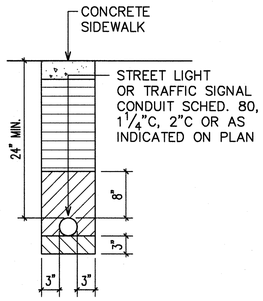

SECTION (AA)

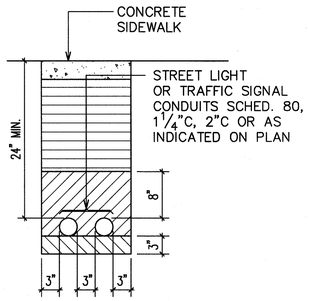

SECTION (BB)

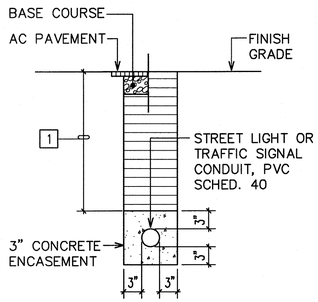

SECTION (CC)

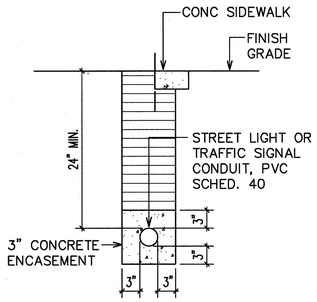

SECTION (DD)

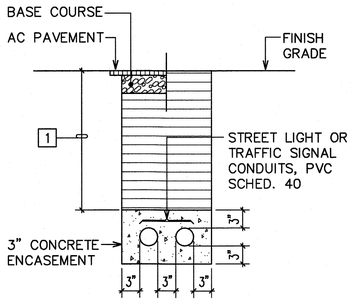

SECTION (EE)

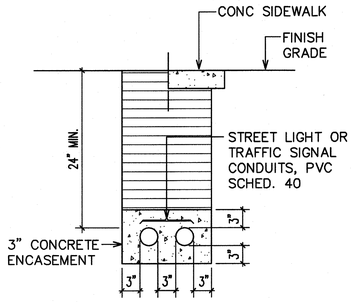

SECTION (FF)

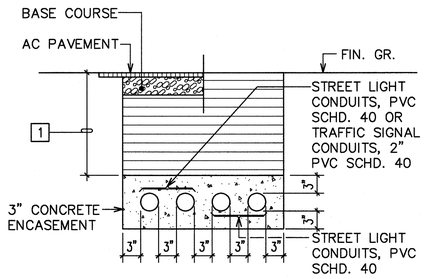

SECTION (GG)

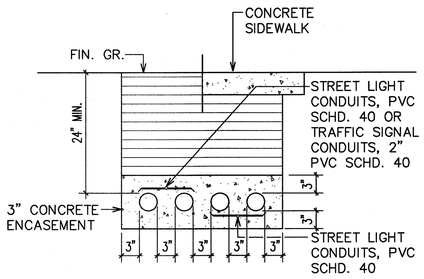

SECTION (HH)

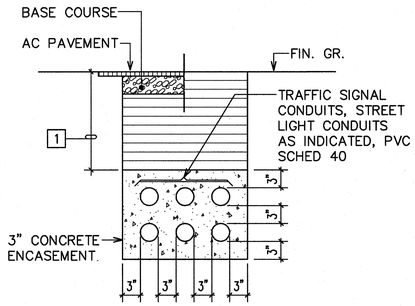

SECTION (JJ)

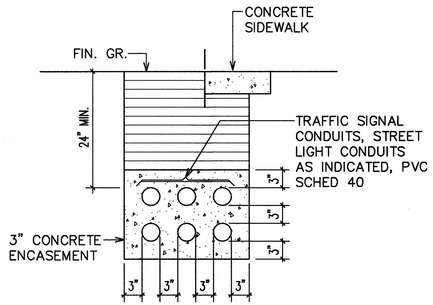

SECTION (KK)

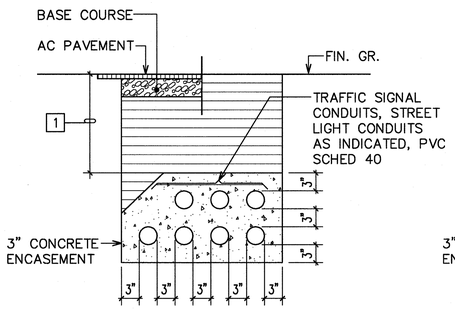

SECTION (LL)

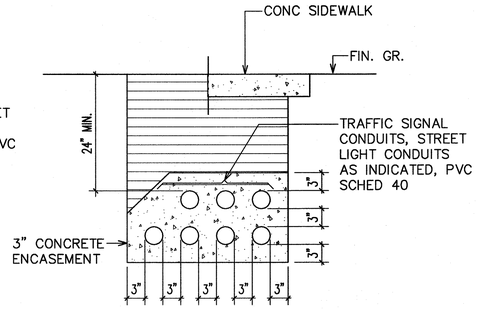

SECTION (MM)

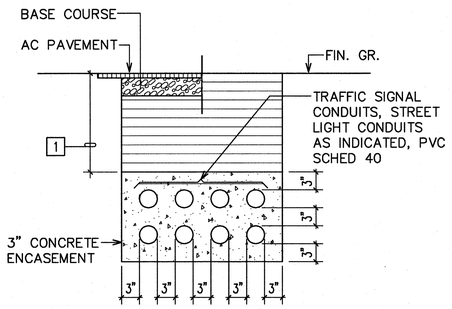

SECTION (NN)

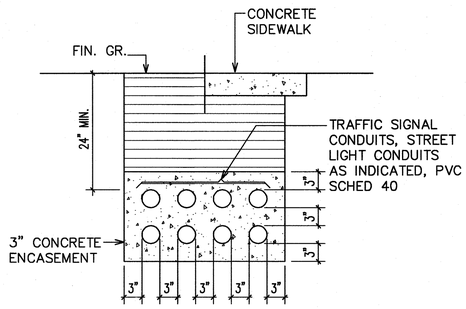

SECTION (OO)

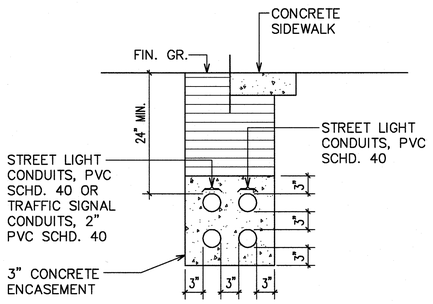

SECTION (PP)

BACKFILL NOTES:

TYPE "A" BACKFILL – EARTH & GRAVEL. ROCK SIZE TO BE 1" MAX & THE MIXTURE TO CONTAIN NOT MORE THAN 50% BY VOLUME OF ROCK PARTICLES. THE MATERIAL SHALL BE NONEXPANSIVE. 95% COMPACTION.

TYPE "B" BACKFILL – EARTH & GRAVEL. MIXTURE MUST PASS A ½" MESH SCREEN & CONTAIN NOT MORE THAN 20% BY VOLUME OF ROCK PARTICLES. 95% COMPACTION.

NOTE – IF NORMAL MATERIAL AT BOTTOM OF TRENCH IS NOT TYPE "B", AN ADDITIONAL 3" SHALL BE EXCAVATED & TYPE "B" BACKFILL PROVIDED.

CONCRETE – 3" ENCASEMENT, 2500 PSI COMPRESSIVE STRENGTH @ 28 DAYS.

NOTE(S):

1 DEPTH VARIES 36" MIN, UNDER AC PAVEMENTS AND 24' MIN. BEYOND AC PAVEMENT

TYPICAL DUCT SECTIONS II

NOT TO SCALE

APPROVED BY:

M. Tao 1/24/12
CHIEF, CIVIL ENGINEERING BRANCH, DPP DATE

NOTE: SEE PLAN SHEETS FOR QUANTITY & SIZE OF CONDUITS
SEE CIVIL SHEETS FOR SIDEWALK & AC PAVEMENT DESIGN DETAILS

GARY I. FUNASAKI LICENSED PROFESSIONAL ENGINEER No. 4105-E HAWAII, U.S.A.

17 MAR 2011

THIS WORK WAS PREPARED BY ME OR UNDER MY SUPERVISION. CONSTRUCTION OF THIS PROJECT WILL BE UNDER MY OBSERVATION. LICENSE EXPIRATION DATE: 04/30/12

REVISION DATE	DESCRIPTION	MADE BY	APPROVED

cp&e Community Planning and Engineering, Inc.
Engineering Design | Construction Management | Infrastructure Planning
1100 Alakea Street, Sixth Floor Honolulu, Hawaii

EAST KAPOLEI II DEVELOPMENT ROAD "E"

HONOULIULI, EWA, OAHU, HAWAII
(DPP SUBD. FILE NO. 2010/SUB-115)
OWNER: DEPARTMENT OF LAND AND NATURAL RESOURCES
DEVELOPER: DEPARTMENT OF HAWAIIAN HOME LANDS
TAX MAP KEY: 9-1-17: Portion 110

TYPICAL DUCT SECTIONS II

DRAWN BY: | ENGINEER: GF | CHECKED BY: GF

APPROVED:

5/3/11
CHIEF, TRAFFIC SIGNALS AND TECHNOLOGY, D.T.S. DATE

12/8/11
CHIEF, WATER POWER BRANCH, D.P.P. DATE

5/12/2011
CHIEF, MECHANICAL/ELECTRICAL DIVISION, D.D.C. DATE

DATE

FILE	POCKET	FOLDER	NO.

DWG. NO. E-11 SHEET 43 OF 61 SHEETS

LAST SAVE: 03/17/11 @ 08:55:50 BY: RN PLOT SC: 1"=0"=1'
Z:\JOBS\PROJECTS\2006\0110_2006\0110_Duct02