SEWER NOTES (PRIVATE/DHHL OWNED)

1. ALL SEWER CONSTRUCTION SHALL BE PERFORMED IN ACCORDANCE WITH THE STANDARD SPECIFICATIONS FOR PUBLIC WORKS CONSTRUCTION, SEPTEMBER 1986; STANDARD DETAILS FOR PUBLIC WORKS CONSTRUCTION, SEPTEMBER 1984, AS AMENDED, OF THE DEPARTMENT OF PUBLIC WORKS, CITY AND COUNTY OF HONOLULU AND THE COUNTIES OF KAUAI, MAUI AND HAWAII, CURRENT CITY PRACTICES, THE REVISED ORDINANCES OF HONOLULU, 1990, AS AMENDED, AND THE DESIGN STANDARDS OF THE DEPARTMENT OF WASTEWATER MANAGEMENT, VOL. 1, JULY 1993.
2. IN THE EVENT THAT ANY CHANGE IN ALIGNMENT OR GRADE FOR THE PROPOSED SEWERS ARE REQUIRED DUE TO UNFORSEEN CONFLICT WITH OTHER UTILITIES, THE ENGINEER IN CHARGE OR THE MAKER OF THE PLANS SHALL BE RESPONSIBLE FOR THE REQUIRED CHANGES WHICH ARE TO BE PRESENTED TO THE DEPARTMENT OF PLANNING AND PERMITTING (DPP) FOR APPROVAL.
3. THE CONTRACTOR SHALL NOTIFY THE CIVIL ENGINEERING BRANCH, DEPARTMENT OF PLANNING AND PERMITTING, AT 768-8084 TO ARRANGE FOR INSPECTIONAL SERVICES, CALL 7 DAYS PRIOR TO COMMENCEMENT OF SEWER WORK. SUBMIT FOUR (4) SETS OF APPROVED CONSTRUCTION PLANS. THE CONTRACTOR SHALL PAY FOR ALL INSPECTION COSTS.
4. CRUSHED ROCK CRADLE IS PERMITTED WHERE SOIL IS STABLE. IN AREAS OF UNSTABLE SOIL, THE MAKER OF THE PLANS AND THE CONSTRUCTION ENGINEER WILL DETERMINE THE PIPE SUPPORT REQUIRED.
5. TREES IN THE ROAD RIGHT-OF-WAY SHALL BE SITUATED A MINIMUM OF FIVE (5) FEET FROM THE CITY'S SEWER LINES.
6. THE UNDERGROUND PIPES, CABLES OR DUCTLINES KNOWN TO EXIST BY THE ENGINEER FROM HIS RESEARCH OF RECORDS ARE INDICATED ON THE PLANS. THE CONTRACTOR SHALL VERIFY THE LOCATION AND DEPTH OF THE FACILITIES, INCLUDING AND AFFECTING SEWER LINES, IN THE PRESENCE OF THE DPP INSPECTOR AND EXERCISE PROPER CARE IN EXCAVATING THE AREA. THE CONTRACTOR SHALL BE RESPONSIBLE AND SHALL PAY FOR ALL DAMAGED UTILITIES.
7. SEWER LATERAL SHALL BE CLEAR OF AND NOT CONFLICTING WITH ANY OTHER UTILITY. MINIMUM HORIZONTAL AND VERTICAL CLEARANCES SHALL BE STRICTLY OBSERVED AND FOLLOWED.
8. SLOPE FOR SEWER LATERALS SHALL BE 1.00% UNLESS OTHERWISE NOTED.
9. BUILDING PLUMBING FACILITIES SHALL BE CONTROLLED BY SEWER LATERAL INVERTS.
10. THE CONTRACTOR SHALL BE RESPONSIBLE FOR MAINTAINING CONTINUOUS SEWER SERVICE TO ALL AFFECTED AREAS DURING CONSTRUCTION.
11. THE CONSULTING ENGINEER SHALL SUBMIT TO THE DEPARTMENT OF PLANNING AND PERMITTING, MYLAR "AS-BUILT" TRACINGS OF THE CONSTRUCTION PLANS AS ACTUALLY CONSTRUCTED, SHOWING ALL CHANGES FROM THE ORIGINAL PLANS.
12. THE CONTRACTOR SHALL BE RESPONSIBLE FOR ANY SEWAGE SPILLS CAUSED DURING CONSTRUCTION. THE CONTRACTOR SHALL NOTIFY THE STATE DEPARTMENT OF HEALTH AND UTILIZE APPROPRIATE SAMPLING AND ANALYZING PROCEDURES. THE CONTRACTOR SHALL BE RESPONSIBLE FOR ALL PUBLIC NOTIFICATIONS AND PRESS RELEASES.
13. THE CONTRACTOR SHALL INSTALL "RAINSTOPPER" MANHOLE INSERTS IN ALL SEWER MANHOLES WITH TYPE "SA" FRAME AND COVER.
14. ALL DROP AND SHALLOW DROP SEWER MANHOLES SHALL BE LINED WITH EPOXY. ALSO, IF THE VELOCITY EXCEEDS TEN (10) FEET PER SECOND (FPS), THE SEWER MANHOLE SHALL BE EPOXY LINED.
15. THE CONTRACTOR SHALL OBTAIN APPROVAL FOR ADVANCE SEWER RISER AGREEMENT AT THE DEPARTMENT OF PLANNING AND PERMITING AND OBTAIN PLUMBING PERMIT FOR PLUMBING WORK BEFORE ANY ADVANCE RISER IS MADE.
16. ALL SEWER PIPE JOINTS WITHIN EASEMENTS SHALL BE WRAPPED WITH GEOTEXTILE ROOT BARRIER.
17. S4C PIPE CRADLE SEALS SHALL BE INSTALLED 10 FEET FROM ALL SEWER MANHOLES TO PREVENT SOIL MIGRATION. SEE DETAIL, THIS SHEET.
18. GEOTEXTILE FABRIC TO ENVELOP THE PIPE CRADLE AND SELECT BACKFILL MATERIAL SHALL BE PROVIDED WHERE WATER OR UNSTABLE SOIL CONDITIONS ARE ENCOUNTERED.
19. CONFINED SPACE FOR ENTRY BY CITY PERSONNEL, INCLUDING INSPECTORS, INTO A PERMIT REQUIRED CONFINED SPACE AS DEFINED IN 29 CFR PART 1910.146(b), THE CONTRACTOR SHALL BE RESPONSIBLE FOR PROVIDING:
    - A. ALL SAFETY EQUIPMENT REQUIRED BY THE CONFINED SPACE REGULATIONS APPLICABLE TO ALL PARTIES OTHER THAN THE CONSTRUCTION INDUSTRY, TO INCLUDE, BUT NOT LIMITED TO, THE FOLLOWING:
        1. FULL BODY HARNESSES FOR UP TO TWO PERSONNEL.
        2. LIFELINE AND ASSOCIATED CLIPS.
        3. INGRESS/EGRESS AND FALL PROTECTION EQUIPMENT.
        4. TWO-WAY RADIOS (WALKIE-TALKIES) IF OUT OF LINE-OF-SIGHT.
        5. EMERGENCY (ESCAPE) RESPIRATOR (10 MINUTE DURATION).
        6. CELLULAR TELEPHONE TO CALL FOR EMERGENCY ASSISTANCE.
        7. CONTINUOUS GAS DETECTOR (CALIBRATED) TO MEASURE OXYGEN, HYDROGEN SULFIDE, CARBON MONOXIDE AND FLAMMABLES (CAPABLE OF MONITORING AT A DISTANCE AT LEAST 20-FEET AWAY).
        8. PERSONAL MULTI-GAS DETECTOR TO BE CARRIED BY INSPECTOR.
    - B. CONTINUOUS FORCED AIR VENTILATION ADEQUATE TO PROVIDE SAFE ENTRY CONDITIONS.
    - C. ONE ATTENDANT/RESCUE PERSONNEL TOPSIDE (TWO, IF CONDITIONS WARRANT IT).
20. WHEN CONNECTING TO A LIVE SEWER LINE, THE CONTRACTOR SHALL ABIDE BY ALL CONDITIONS THAT THE STATE DEPARTMENT OF HEALTH SETS FORTH TO MITIGATE ANY WASTEWATER SPILL THAT MAY OCCUR. THE CONTRACTOR SHALL INFORM THE CITY'S INSPECTOR FIVE (5) WORKING DAYS PRIOR TO THE ACTUAL CONNECTION. THE CONTRACTOR SHALL BE RESPONSIBLE FOR ANY FINES AND PENALTIES DUE TO ANY SPILLS RESULTING FROM THE CONNECTION.
21. THE DEPARTMENT OF HAWAIIAN HOME LANDS (DHHL) SHALL PAY TO THE CITY THE APPLICABLE WASTEWATER SYSTEM FACILITY CHARGE.
22. NO RUNGS SHALL BE INSTALLED INSIDE NEW SEWER MANHOLES.

SPECIAL PROVISIONS FOR PVC PLASTIC SEWER PIPE (FOR PIPES 6" TO 12" IN DIAMETER ONLY)

1. POLYVINYL CHLORIDE (PVC) PLASTIC SEWER PIPE AND APPURTENANCES USED ON THIS PROJECT SHALL CONFORM TO THE REQUIREMENTS OF SECTION 21 OF THE STANDARD SPECIFICATIONS FOR PUBLIC WORKS CONSTRUCTION DATED SEPTEMBER 1986, EXCEPT AS MODIFIED HEREIN.
    - A. GENERAL. PVC GRAVITY SEWER PIPE AND FITTINGS SHALL CONFORM TO THE REQUIREMENTS OF AWWA C-900/C-905, CLASS 100PSI., DR=25. THE PIPE SHALL BE GREEN IN COLOR.
    - B. ACCEPTANCE. THE BASIS FOR ACCEPTANCE SHALL BE THE INSPECTION OF PIPE, FITTINGS AND COUPLINGS, THE TESTS SPECIFIED HEREIN AND IN SECTION 21, AND COMPLIANCE WITH THE SPECIFICATIONS. AT THE TIME OF MANUFACTURE, EACH LOT OF PIPE AND FITTINGS SHALL BE INSPECTED FOR DEFECTS AND TESTED FOR IMPACT, STIFFNESS AND FLATTENING IN ACCORDANCE WITH ASTM D3034. THE ENGINEER MAY REQUIRE CERTIFICATION BY THE MANUFACTURER THAT THE TEST RESULTS COMPLY WITH SPECIFICATION REQUIREMENTS. WHEN THE PIPE IS DELIVERED TO THE JOB SITE, THE ENGINEER MAY REQUIRE THE CONTRACTOR TO PROVIDE ADDITIONAL TESTING TO INSURE THE QUALITY OF THE PIPE AT NO EXPENSE TO THE CITY. PIPE WHICH IS NOT INSTALLED WITHIN 120 DAYS OF THE LATEST FACTORY TEST SHALL NOT BE USED WITHOUT PRIOR APPROVAL OF THE ENGINEER.
    - C. SELECTION OF TEST PIPE. WHEN TESTING IS REQUIRED BY THE ENGINEER, ONE TEST PIPE SHALL BE SELECTED AT RANDOM BY THE ENGINEER FROM EACH 1200 LINEAR FEET OR FRACTION THEREOF OF EACH SIZE OF PIPE DELIVERED TO THE JOB SITE BUT NO LESS THAN ONE TEST PIPE PER LOT. A LOT SHALL BE DEFINED AS PIPE HAVING THE SAME IDENTIFICATION MARKING. THE LENGTH OF SPECIMEN OF EACH SELECTED PIPE SHALL BE A MINIMUM OF 8 FEET.
    - D. CELL CLASSIFICATION. PIPE SHALL BE MADE OF PVC PLASTIC HAVING A CELL CLASSIFICATION OF 12454-B, 13364-A, OR 13364-B AS DEFINED IN ASTM D1784. THE FITTINGS SHALL BE MADE OF PVC PLASTIC HAVING A CELL CLASSIFICATION D1784. THE FITTINGS SHALL BE MADE OF PVC PLASTIC HAVING A CELL CLASSIFICATION OF 12454-B, 12454-C, OR 13343-C. PVC COMPOUNDS OF OTHER CELL CLASSIFICATIONS SHALL BE PRE-QUALIFIED BY THE MANUFACTURER.
    - E. JOINTS. PIPE JOINTS SHALL BE BELL AND SPIGOT TYPE WITH AN ELASTOMERIC GASKET. THE GASKETED JOINTS SHALL BE MANUFACTURED WITH A SOCKET CONFIGURATION WHICH WILL PRECLUDE IMPROPER INSTALLATION OF THE GASKET AND WILL INSURE THE GASKET REMAINS IN PLACE DURING THE JOINING OPERATION. ALL PIPE SHALL HAVE A HOME MARK ON THE SPIGOT END TO INDICATE PROPER PENETRATION WHEN THE JOINT IS MADE.
    - F. IDENTIFICATION MARKS. ALL PIPE FITTINGS AND COUPLINGS SHALL BE CLEARLY MARKED AT AN INTERVAL NOT TO EXCEED 5 FEET AS FOLLOWS:
        (1) NOMINAL PIPE DIAMETER.
        (2) PVC CELL CLASSIFICATION.
        (3) COMPANY, PLANT, SHIFT, ASTM, SDR, AND DATE DESIGNATIONS.
        (4) SERVICE DESIGNATION AND LEGEND.

SPECIAL PROVISIONS FOR PVC PLASTIC SEWER PIPE (CONT.)

G. DIMENSIONS AND TOLERANCES:

TABLE - PIPE DIMENSION (INCHES)

NOMINAL SIZE	AVERAGE O.D.	TOLERANCE ON AVERAGE	MINIMUM WALL THICKNESS	APPROX. WT./20' LENGTH (LBS.)
6	6.275	±0.011	0.180	49.4
8	8.400	±0.012	0.240	88.5
10	10.500	±0.015	0.300	138.6
12	12.500	±0.018	0.360	198.1

H. CHEMICAL RESISTANCE. THE PVC COMPOUND FOR CELL CLASSIFICATIONS NOT SPECIFICALLY IDENTIFIED IN ITEM D ABOVE SHALL BE PREQUALIFIED BY THE PIPE MANUFACTURER BY MEETING THE CHEMICAL RESISTANCE TESTS WHICH FOLLOW. COMPOUND SAMPLES AND MOLDED TEST SPECIMENS SHALL BE PREPARED IN ACCORDANCE WITH ASTM D543.

TENSILE AND IZOD IMPACT EXPOSURE SPECIMENS SHALL BE IMMERSED IN THE SOLUTIONS SPECIFIED IN TABLE 2 FOR A PERIOD OF 112 DAYS. TEST SPECIMENS SHALL BE CONDITIONED TO CONSTANT WEIGHT AT 110°F (43.3°C) BEFORE AND AFTER SUBMERSION. THE SOLUTIONS SHALL BE KEPT AT A TEMPERATURE OF 77°F ±5°F (24°C ±3°C). AT 28-DAY INTERVALS, SELECTED SPECIMENS SHALL BE REMOVED, WASHED, SURFACE DRIED AND TESTED.

TABLE 2 - TEST SOLUTIONS

CHEMICAL SOLUTION	CONCENTRATION (%)
SULFURIC ACID	20 *
SODIUM HYDROXIDE	5
AMMONIUM HYDROXIDE	5 *
NITRIC ACID	1 *
FERRIC CHLORIDE	1
SOAP	0.1
DETERGENT (LINEAR ALKYL BENZYL SULFONATE OR LAS)	0.1
BACTERIOLOGICAL	BOD NOT LESS THAN 70 PPM

* VOLUMERIC PERCENTAGES OF CONCENTRATED REAGENTS OF C.P. GRADE

WEIGHT CHANGE SPECIMENS SHALL BE 2 INCHES IN DIAMETER AND MAY BE MOLDED DISCS OR DISCS CUT FROM THE PIPE WALL. SPECIMENS SHALL BE CONDITIONED FOR SEVEN DAYS AT 43° ±2°C, COOLED IN A DESICCATOR FOR THE THREE HOURS AT 23° ±2°C, WEIGHED, AND THEN IMMERSED IN THE SOLUTIONS. AT 4 WEEK INTERVALS, SELECTED SPECIMENS SHALL BE REMOVED, WASHED, SURFACE DRIED AND WEIGHED. THESE SAME SPECIMENS SHALL THEN BE RECONDITIONED FOR SEVEN DAYS AT 43° ±2°C, COOLED IN A DESICCATOR FOR THREE HOURS AT 23° ±2°C AND AGAIN WEIGHED.

INITIAL AND POST EXPOSURE SPECIMENS SHALL MEET THE FOLLOWING REQUIREMENTS WHEN TESTED AT 23° ±2°C:

PROPERTY	ASTM TEST METHOD	CELL CLASS MINIMUM VALUES 12454	13343	13364
TENSILE STRENGTH (YEILD), PSI	D 638	7000	6000	6000
IMPACT STRENGTH, FT-LBS/IN.	D 256 METHOD A	0.65	1.5	1.5
WEIGHT CHANGE, %	D 543	1.5	1.5	1.5

IF ANY SPECIMEN FAILS TO MEET THE REQUIREMENTS AT ANY TIME DURING THE 112 DAY EXPOSURE PERIOD, THE MATERIAL WILL BE SUBJECT TO REJECTION.

I. TRENCH EXCAVATION. TRENCHES FOR PVC SEWER PIPE SHALL BE EXCAVATED AND PREPARED IN ACCORDANCE WITH THE REQUIREMENTS OF SECTION 11 OF THE STANDARD SPECIFICATIONS FOR PUBLIC WORKS CONSRUCTION EXCEPT AS MODIFIED HEREIN.

(1) OVEREXCAVATION. THE MAXIMUM ALLOWABLE TRENCH WIDTH SHALL BE EQUAL TO THE OUTSIDE DIAMETER OF THE PIPE PLUS 18-INCHES FOR PIPE UP TO 12" (I.D.). IF THE TRENCH EXCAVATION EXCEEDS THE COMPUTED MAXIMUM ALLOWABLE TRENCH WIDTH WHETHER BY EXCAVATION, CAVE-IN, OR BY GROUND MOVEMENT, THE CONTRACTOR SHALL PROVIDE AT HIS OWN EXPENSE ADDITIONAL BEDDING, ANOTHER TYPE OF BEDDING, AND/OR A HIGHER STRENGTH OF PIPE DESIGNATED BY THE ENGINEER. WHERE SHORING IS REQUIRED, THE ALLOWABLE WIDTH OF THE TRENCH SHALL BE INCREASED ONLY BY THE THICKNESS OF THE SHEATHING.

J. PIPE BEDDING. WHERE UNSUITABLE MATERIAL IS ENCOUNTERED AT THE SUBGRADE AND ADDITIONAL EXCAVATION IS REQUIRED, THE VOID CREATED BY THE ADDITIONAL EXCAVATION SHALL BE FILLED AND COMPACTED WITH BEDDING MATERIAL SPECIFIED ON THE PLANS OR SPECIAL PROVISIONS. WHERE CONCRETE IS SPECIFIED TO BED THE PIPE, THE TOP OF THE CONCRETE SHALL BE CONSIDERED AS THE TOP OF THE BEDDING.

BEDDING MATERIAL SHALL CONSIST OF ONE OF THE FOLLOWING:

(1) BEACH SAND.
(2) NO. 8 OR NO. 67 AGREGATE CONFORMING TO THE GRADATION REQUIREMENTS OF ASTM C33.
(3) 3/8" FILTER AGGREGATE.
(4) NATIVE FREE-DRAINING GRANULAR MATERIAL HAVING A MINIMUM SAND EQUIVALENT OF 30 OR HAVING A COEFFICIENT OF PERMEABILITY GREATER THAN 0.001 CENTIMETER PER SECOND.
(5) OTHER MATERIAL APPROVED BY THE ENGINEER.

BEDDING MATERIAL SHALL BE PLACED SO THAT THE PIPE IS SUPPORTED FOR THE FULL LENGTH OF THE BARREL WITH FULL BEARING ON THE BOTTOM SEGMENT OF THE PIPE EQUAL TO A MINIMUM OF 0.4 TIMES THE OUTSIDE DIAMETER OF THE BARREL. IF THE PIPE IS TO BE LAID IN A ROCK EXCAVATION, THE ROCK SHALL BE REMOVED SUCH THAT NO RIBS, ROCKS, OR SOLID PROJECTIONS SHALL BE WITHIN 6 INCHES OF THE SEWER PIPE HORIZONTALLY AND THERE SHALL BE AT LEAST 4 INCHES OF BEDDING BELOW THE PIPE.

COMPACTION OF THE BEDDING FROM THE BOTTOM OF THE PIPE TO 12 INCHES ABOVE THE PIPE BARREL BY JETTING WILL BE PERMITTED PROVIDED THAT THE FOUNDATION MATERIAL WILL NOT SOFTEN OR BE OTHERWISE DAMAGED BY THE APPLIED WATER. FLOODING OR PONDING METHODS OF ACHIEVING THE REQUIRED RELATIVE DENSITY WILL NOT BE PERMITTED. THE SIZE AND LENGTH OF JET PIPE, QUANTITIES AND PRESSURE OF WATER, AND JETTING LOCATIONS SHALL BE SUFFICIENT TO COMPACT THE BEDDING TO 87% MINIMUM RELATIVE DENSITY. COMPACTION OF THE BACKFILL FROM 12 INCHES ABOVE THE PIPE BARREL TO THE FINISH SURFACE SHALL CONFORM TO THE REQUIREMENTS OF SECTION 11.4 OF THE STANDARD SPECIFICATIONS FOR PUBLIC WORKS CONSTRUCTION.

K. MANDREL TEST OF PVC PIPE. A MANDREL TEST SHALL BE PERFORMED NO SOONER THAN 30 DAYS AFTER THE TRENCH BACKFILL IS COMPLETED. IN ROADWAY AREAS THE 30-DAY PERIOD SHALL BEGIN AFTER INSTALLATION AND COMPACTION OF BEDDING, BACKFILL AND SUBBASE TO WITHIN 2 FEET OF THE FINISHED PAVEMENT GRADE. A RIGID MANDREL SHALL BE PULLED THROUGH THE PIPE BY HAND BETWEEN ADJACENT MANHOLES TO MEASURE FOR OBSTRUCTIONS (DEFLECTIONS, JOINT OFFSETS AND LATERAL PIPE INTRUSIONS). THE MANDREL SHALL HAVE A CROSS SECTION EQUIVALENT TO A CIRCLE HAVING A DIAMETER AT LEAST 95 PERCENT OF THE SPECIFIED AVERAGE INSIDE DIAMETER OF THE PIPE. THE MINIMUM LENGTH OF THE CIRCULAR PORTION OF THE MANDREL SHALL BE EQUAL TO THE NOMINAL DIAMETER OF THE PIPE. THE TEST SHALL BE PERFORMED BY THE CONTRACTOR IN THE PRESENCE OF THE ENGINEER. ALL MATERIAL, EQUIPMENT AND LABOR REQUIRED TO PERFORM THE TEST SHALL BE PROVIDED BY THE CONTRACTOR AT NO COST TO THE CITY. ANY SECTION OF PIPE THAT FAILS TO PERMIT PASSAGE OF THE MANDREL WILL NOT BE ACCEPTED UNTIL PROPERLY REPAIRED OR REPLACED AND RETESTED.

2. BEDDING FOR PVC PIPE SEWER SHALL BE CLASS "B" AS SHOWN ON S-47 OF THE STANDARD DETAILS FOR PUBLIC WORKS CONSTRUCTION UNLESS OTHERWISE NOTED.
3. THE MAXIMUM DESIGN DEFLECTION (FLATTENING) FOR PLASTIC PIPE SHALL BE 5 PERCENT. THE MAXIMUM SDR (STANDARD DIMENSION RATIO OF PIPE OUTSIDE DIAMETER TO PIPE WALL THICKNESS) SHALL BE 35.
4. SPECIAL WATERTIGHT MANHOLE COUPLINGS PER STANDARD DETAIL S-48 WILL BE REQUIRED FOR ALL MANHOLE CONNECTIONS. COUPLINGS MAY BE CAST DIRECTLY INTO CAST-IN-PLACE MANHOLES OR GROUTED INTO PRECAST CONCRETE MANHOLES WITH NON-SHRINK OR EXPANSION TYPE GROUT.
5. FOR CONNECTIONS OF PVC LATERAL SEWERS TO MAINS OF DIFFERENT MATERIALS, AN APPROVED SADDLE WYE FITTING CONSTRUCTED OF THE SAME MATERIAL AS THE MAIN LINE SHALL BE INSTALLED. CONNECTION TO THE SADDLE FITTING SHALL BE MADE BY MEANS OF AN APPROVED FLEXIBLE RUBBER COUPLING IN ACCORDANCE WITH THE COUPLING MANUFACTURER'S INSTALLATION RECOMMENDATIONS OR BY OTHER MEANS ACCEPTABLE TO THE ENGINEER.
6. PSC CONSULTANTS, LLC LETTER DATED APRIL 3, 2009, RECOMMENDS APPROVAL OF THE USE OF PVC PIPE FOR THE EAST KAPOLEI II DEVELOPMENT EAST-WEST ROAD AND ROAD "E" PROJECT.
7. PVC PIPE SHALL BE LIMITED TO USE IN AGRICULTURAL, RESIDENTIAL AND APARTMENT ZONED AREAS AND IN SIZES FROM 6 INCHES TO 12 INCHES IN DIAMETER.

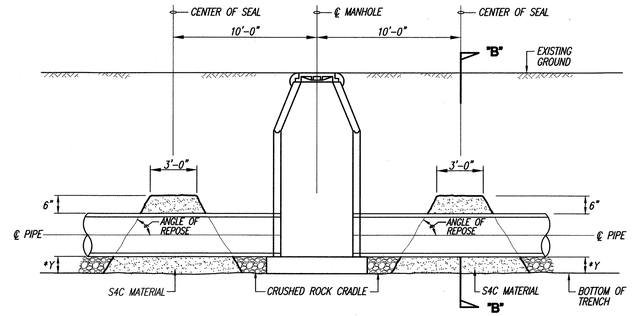

*SEE C & C STANDARD DETAILS, SHEET S-1 FOR DIMENSION OR AS SPECIFIED ON THE CONSTRUCTION PLANS

SEAL DETAIL
NOT TO SCALE

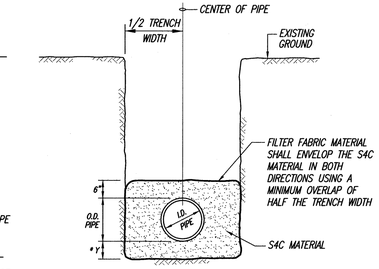

SECTION "B-B"

NOTES:

1. SEALS SHALL BE PLACED 10 FT. UPSTREAM AND DOWNSTREAM FROM EACH MANHOLE.
2. SEALS SHALL NOT BE PAID FOR SEPARATELY BUT SHALL BE CONSIDERED INCIDENTAL TO CRUSHED ROCK CRADLE.
3. THE CONTRACTOR SHALL COMPACT S4C MATERIAL BY PONDING AND DRAINING. UPON DRAINING, A VIBRATORY MACHINE SHALL BE USED UNTIL NO VISIBLE EVIDENCE OF FURTHER CONSOLIDATION EXISTS.

NOTES:

1. CLOTH BARRIER TO BE MIRAFI 140N OR APPROVED EQUAL.
2. LUMBER SIZES ARE NOMINAL INCHES.
3. 1 X 2 CLOTH BARRIER CAPS TO BE NAILED 12" O.C.
4. BURLAP IS NOT ACCEPTABLE AS THE CLOTH BARRIER.
5. CLOTH TO HAVE NO HORIZONTAL SEAMS.
6. VERTICAL SEAMS TO BE MADE OVER UPRIGHTS ONLY.
7. ALL SEAMS TO BE CAPPED WITH MINIMUM 1 X 2.
8. ALL JOINTS TO BE SECURELY FASTENED BY MECHANICAL MEANS.

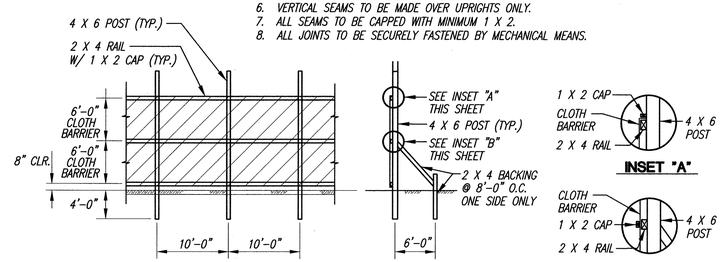

DETAIL - DUST FENCE
NOT TO SCALE

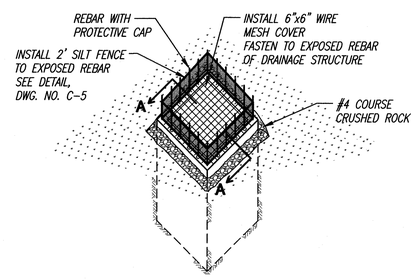

DETAIL - WIRE MESH COVER
NOT TO SCALE

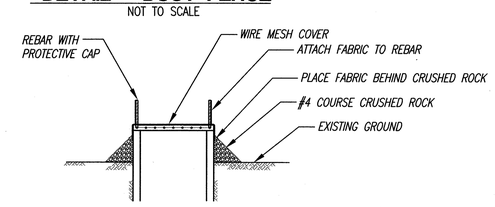

SECTION "A-A"

REVISION DATE	DESCRIPTION	MADE BY	APPROVED

Community Planning and Engineering, Inc.
Engineering Design | Construction Management | Infrastructure Planning
1100 Alakea Street, Sixth Floor Honolulu, Hawaii

EAST KAPOLEI II DEVELOPMENT ROAD "E"

HONOULIULI, EWA, OAHU, HAWAII
(DPP SUBD. FILE NO. 2010/SUB-115)
OWNER: DEPARTMENT OF LAND AND NATURAL RESOURCES
DEVELOPER: DEPARTMENT OF HAWAIIAN HOME LANDS
TAX MAP KEY: 9-1-17: Portion 110

GENERAL NOTES -3

DRAWN BY: LYLT	ENGINEER: SS, FJC	CHECKED BY: AMM

APPROVED:

ANSON M. MURAYAMA
LICENSED PROFESSIONAL ENGINEER
No. 6975-C
HAWAII, U.S.A.

THIS WORK WAS PREPARED BY ME OR UNDER MY SUPERVISION CONSTRUCTION OF THIS PROJECT WILL BE UNDER MY OBSERVATION.
LICENSE EXPIRATION DATE: 04/30/12

12/2/11
CHIEF, WASTEWATER BRANCH, D.P.W. DATE
(FOR CONFORMANCE WITH CITY STANDARDS ONLY)

FILE	POCKET	FOLDER	NO.

DWG. NO. C-3 SHEET 4 OF 61 SHEETS

P:\Land Projects\DHHL East Kapolei II\Road E\Construction Drawings\Government Review #4\04 GENERAL NOTES - 3_GR#4.dwg, 4 GENERAL NOTES-3, 10/5/2011 8:27:26 AM, 1:1