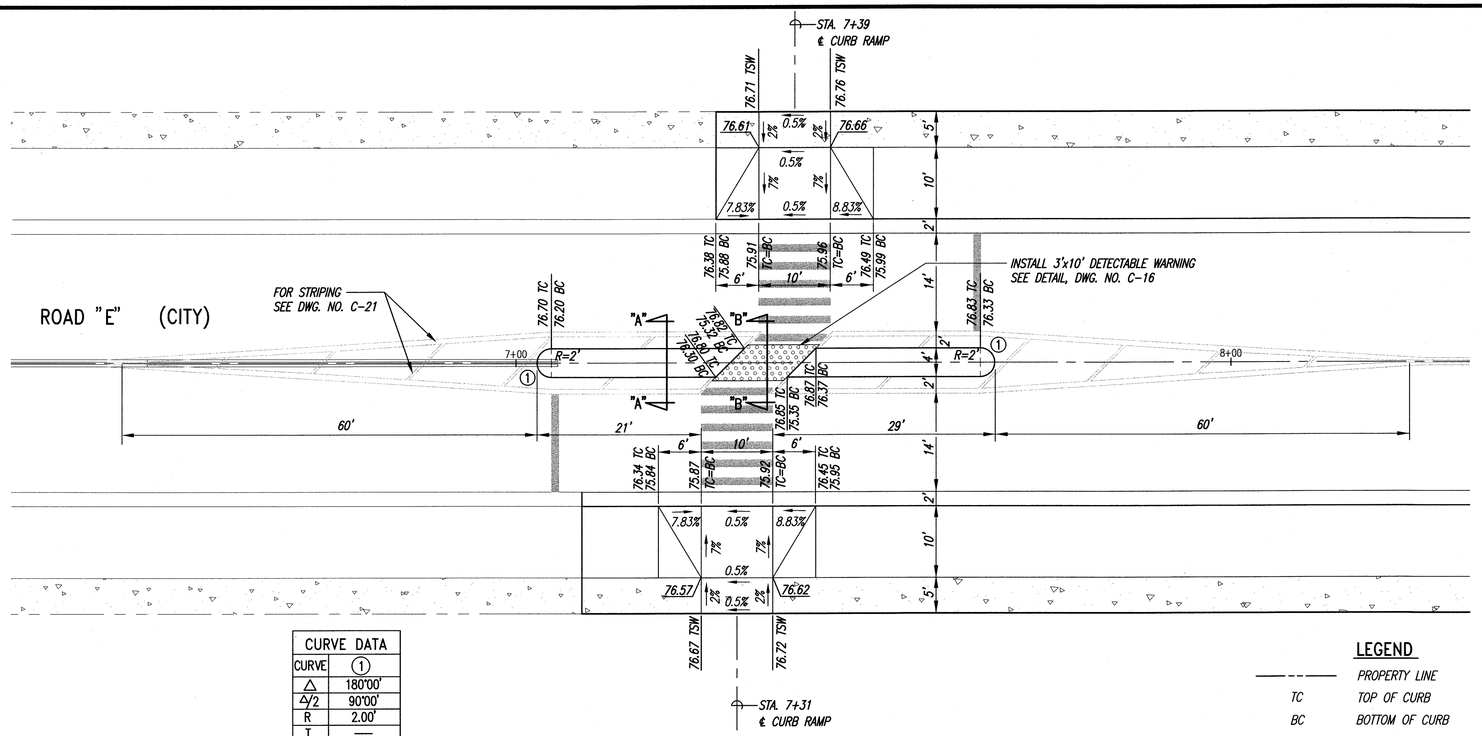

CURVE DATA	
CURVE	①
△	180°00'
△/2	90°00'
R	2.00'
T	—
C	4.00'
Lc	6.28'

CONSTRUCTION PLAN

SCALE: 1"=10'

LEGEND

— — — —	PROPERTY LINE
TC	TOP OF CURB
BC	BOTTOM OF CURB
TSW	TOP SIDEWALK

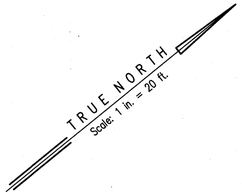

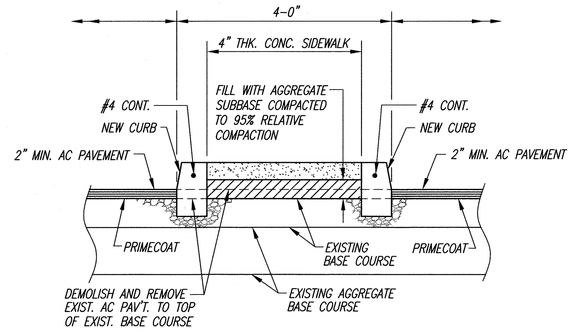

SECTION "A-A"

NOT TO SCALE

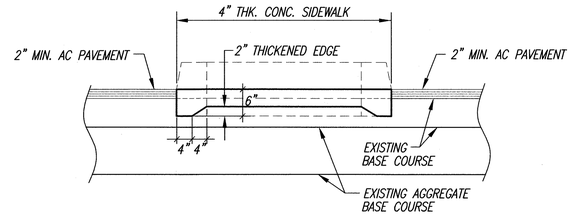

SECTION "B-B"

NOT TO SCALE

NOTE:

1. CONTRACTOR SHALL COMPLY WITH THE CITY AND COUNTY OF HONOLULU ENGINEERING AND POLICY MEMORANDUM NO. CEB-1-09. JOINTING REQUIREMENTS FOR CONCRETE SIDEWALKS AND DRIVEWAYS DATED APRIL 6, 2009.

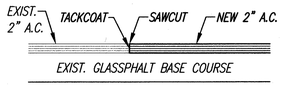

SMOOTH RIDING CONNECTION DETAIL

NOT TO SCALE

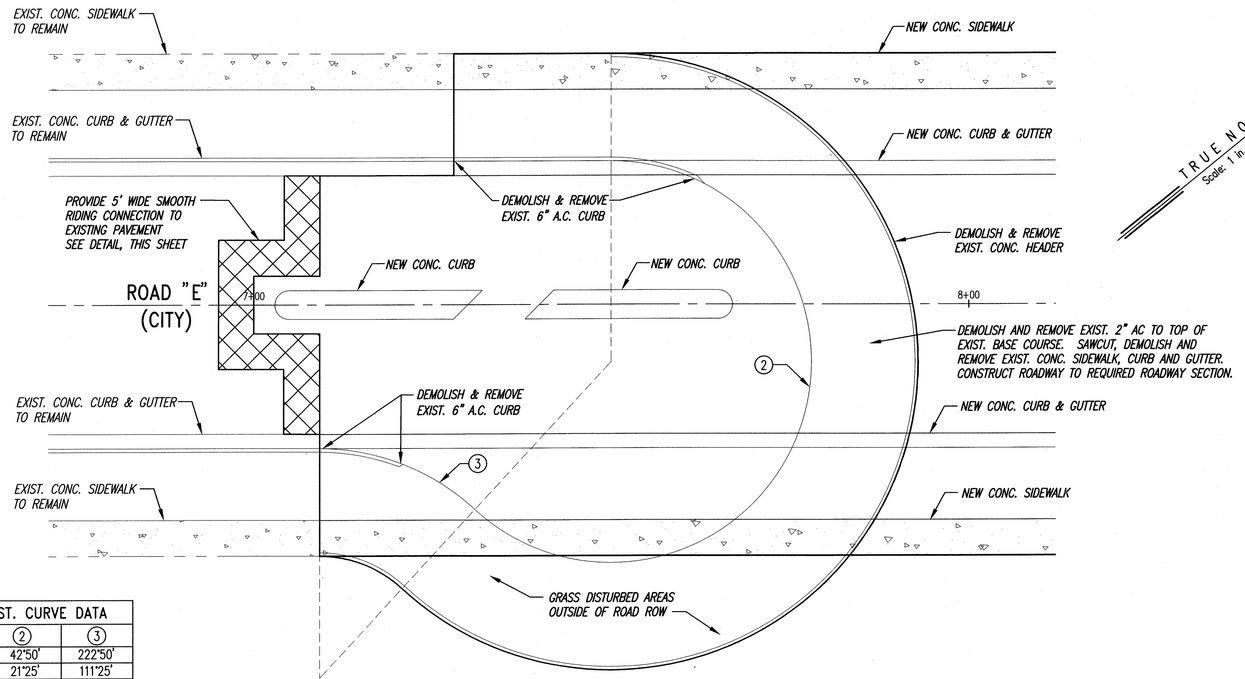

EXIST. CURVE DATA		
CURVE	②	③
△	42°50'	222°50'
△/2	21°25'	111°25'
R	32.00'	28.00'
T	12.55'	—
C	23.37'	—
Lc	23.92'	108.90'

DEMOLITION PLAN

DIAGONAL SPLITTER

SCALE: 1"=10'

10 5 0 10 20

Graphic Scale in Feet

ANSON M. MURAYAMA
LICENSED PROFESSIONAL ENGINEER
No. 6975-C
HAWAII, U.S.A.

THIS WORK WAS PREPARED BY ME OR UNDER MY SUPERVISION. CONSTRUCTION OF THIS PROJECT WILL BE UNDER MY OBSERVATION. LICENSE EXPIRATION DATE: 04/30/12

REVISION DATE	DESCRIPTION	MADE BY	APPROVED

Community Planning and Engineering, Inc.
Engineering Design | Construction Management | Infrastructure Planning
1100 Alakea Street, Sixth Floor — Honolulu, Hawaii

EAST KAPOLEI II DEVELOPMENT
ROAD "E"
HONOULIULI, EWA, OAHU, HAWAII
(DPP SUBD. FILE NO. 2010/SUB-115)
OWNER: DEPARTMENT OF LAND AND NATURAL RESOURCES
DEVELOPER: DEPARTMENT OF HAWAIIAN HOME LANDS
TAX MAP KEY: 9-1-17: Portion 110

DIAGONAL SPLITTER DETAIL

DRAWN BY: LYLT	ENGINEER: SS, FJC	CHECKED BY: AMM

APPROVED:

1/24/12
CHIEF, CIVIL ENGINEERING BRANCH, D.P.P. DATE

12-8-11
CHIEF, SUBDIV. REVIEW BRANCH, D.P.P. DATE

DWG. NO. C-19 SHEET 20 OF 61 SHEETS

FILE	POCKET	FOLDER	NO.

P:\Land Projects\DHHL East Kapolei II\Road E\Construction Drawings\Government Review #4\20 DIAGONAL SPLITTER DETAIL_GR#4.dwg, 20 DIAGONAL SPLITTER DETAIL, 10/5/2011 10:40:15 AM, 1:1