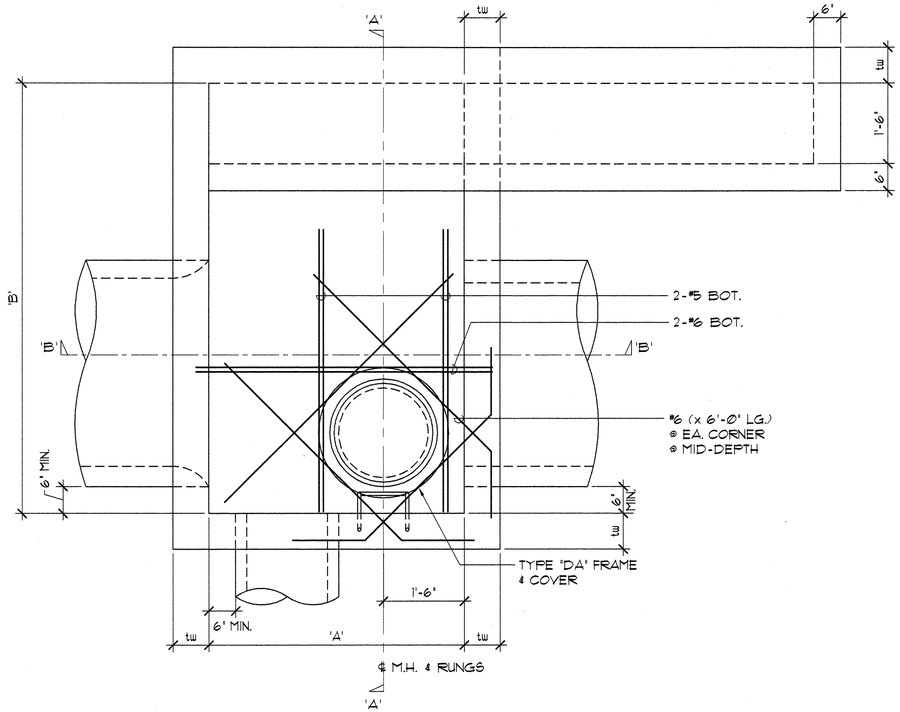

TOP PLAN (MH ON FRONT FACE)

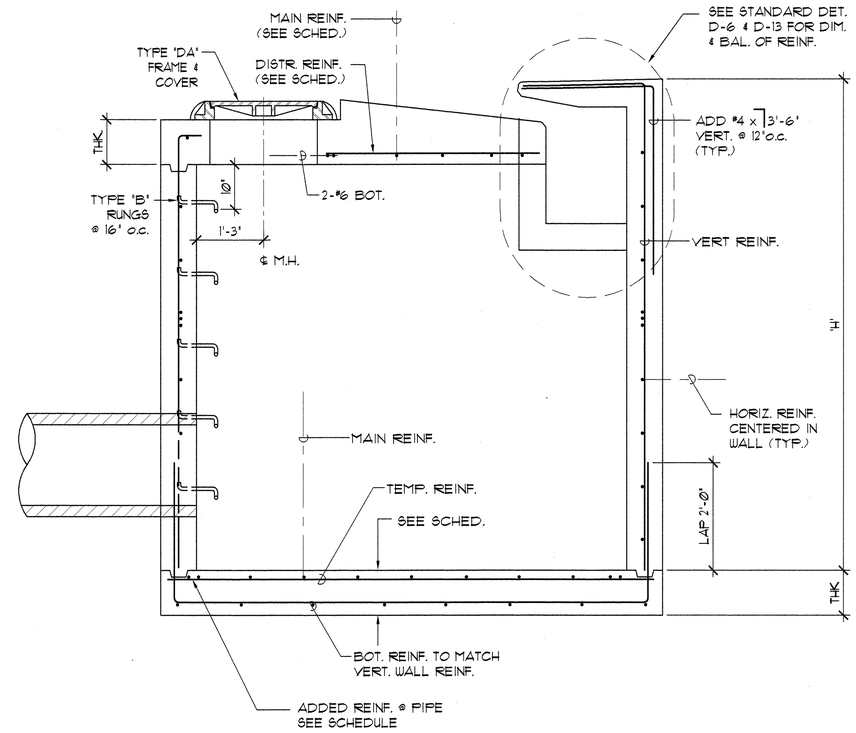

SECTION 'A-A'

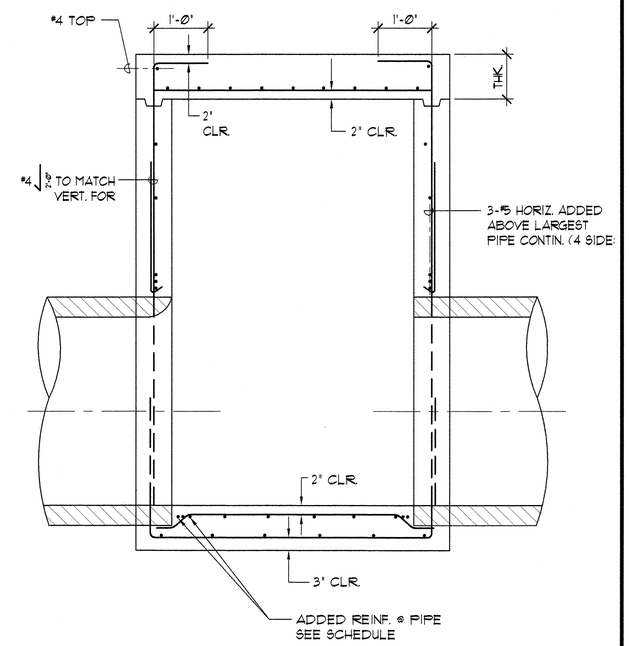

SECTION 'B-B'

SPECIAL TYPE 'B' CATCH BASIN CAST-IN-PLACE DETAILS

SC: 3/4" = 1'-Ø"

A
S-4

SLAB REINFORCING SCHEDULE — TYPE 'B' CB

MARK	"H" MAX.	"A"	"B"	tw	TOP SLAB REINF. THK.	TOP SLAB REINF. TOP MAIN	TOP SLAB REINF. REINF. DISTRIB.	INVERT SLAB REINF. THK.	INVERT SLAB REINF. MAIN	INVERT SLAB REINF. TEMP.
A-3 *	9.26'	5'-4"	7'-4"	8"	10"	#5@6"o.c.	#5@10"o.c.	10"	#4@10"o.c.	#4@10"o.c.
B-2	11.15'	4'-8"	6'-7"	8"	10"	#5@6"o.c.	#5@10"o.c.	10"	#4@10"o.c.	#4@10"o.c.
E-5, F-1	7.58'	4'-8"	6'-10"	8"	10"	#5@7"o.c.	#5@12"o.c.	10"	#4@10"o.c.	#4@10"o.c.
E-9	11.6'	4'-8"	8'-0"	8"	10"	#6@7"o.c.	#5@8"o.c.	12"	#4@9"o.c.	#4@9"o.c.

* CONSTRUCT WITHOUT TOP SLAB & GUTTER.

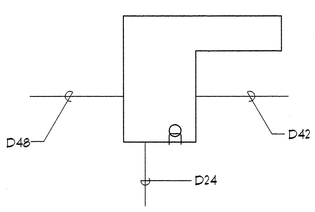

A-3

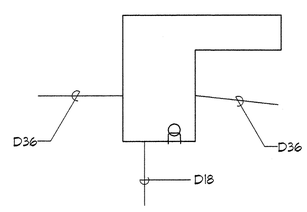

B-2

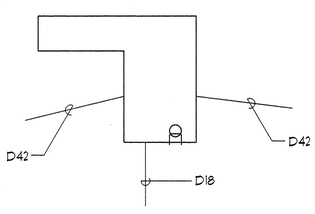

E-5

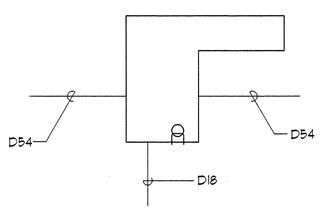

E-9

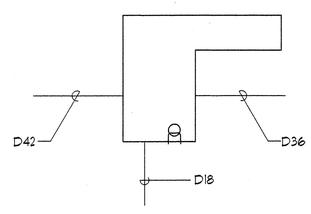

F-1

SCHEMATIC PLAN

N.T.S.

B
S-4

WALL REINFORCING SCHEDULE

MARK	A-3	B-2	E-5, F-1	E-9	MARK
tw	8"	8"	8"	8"	tw
VERT. REINF.	#4@12"o.c.	#4@12"o.c.	#4@12"o.c.	#4@12"o.c.	VERT. REINF.
"H"	HORIZ. REINF. (CENTERED IN WALL)				"H"
0'-0" TO 2'-0"	#5@8"o.c.	#5@9"o.c.	#5@8"o.c.	#5@8"o.c.	0'-0" TO 2'-0"
2'-0" TO 3'-0"	↓	↓	↓	↓	2'-0" TO 3'-0"
3'-0" TO 4'-0"				#5@5"o.c.	3'-0" TO 4'-0"
4'-0" TO 5'-0"	#5@6"o.c.	#5@6"o.c.		↓	4'-0" TO 5'-0"
5'-0" TO 6'-0"	↓	↓	↓	↓	5'-0" TO 6'-0"
6'-0" TO 7'-0"					6'-0" TO 7'-0"
7'-0" TO 8'-0"					7'-0" TO 8'-0"
8'-0" TO 9'-0"					8'-0" TO 9'-0"
>9'-0"					>9'-0"

ADDED REINF. @ PIPE

PIPE SIZE	REINF.
36"ϕ	1-#5
42"ϕ	1-#5
48"ϕ	2-#5
54"ϕ	2-#5

THOMAS Y. TANIMURA
LICENSED PROFESSIONAL ENGINEER
No. 4926-S
HAWAII, U.S.A.

T Y Tanimura
04/30/12
Expiration Date of the License

THIS WORK WAS PREPARED BY ME OR UNDER MY SUPERVISION AND CONSTRUCTION OF THIS PROJECT WILL BE UNDER MY OBSERVATION.

REVISION DATE	DESCRIPTION	MADE BY	APPROVED

cp&e **Community Planning and Engineering, Inc.**
Engineering Design | Construction Management | Infrastructure Planning
1100 Alakea Street, Sixth Floor Honolulu, Hawaii

EAST KAPOLEI II DEVELOPMENT ROAD "E"

HONOULIULI, EWA, OAHU, HAWAII
(DPP SUBD. FILE NO. 2010/SUB-115)
OWNER: DEPARTMENT OF LAND AND NATURAL RESOURCES
DEVELOPER: DEPARTMENT OF HAWAIIAN HOME LANDS
TAX MAP KEY: 9-1-17: PORTION 110

SPECIAL TYPE 'B' CATCH BASIN CAST-IN-PLACE DETAILS

DRAWN BY: HM | ENGINEER: TT | CHECKED BY: TT

APPROVED:

M. Tsuji 1/24/12
CHIEF, CIVIL ENGINEERING BRANCH, D.P.P. DATE

DWG. NO. **S-4** SHEET 28 OF 61 SHEETS

FILE	POCKET	FOLDER	NO.