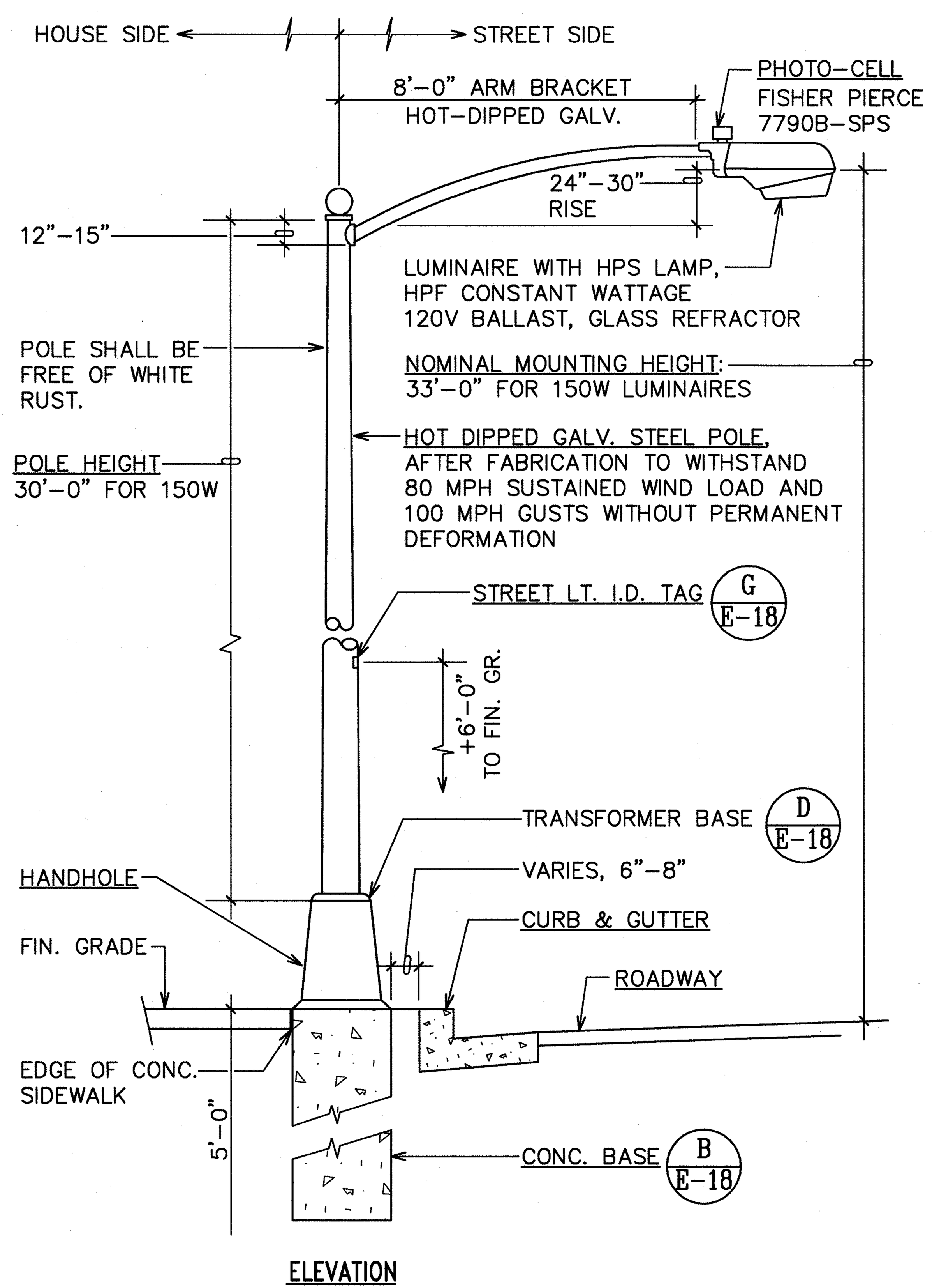

A E-18 STREET LIGHT STANDARD
N.T.S. METERED SYSTEM

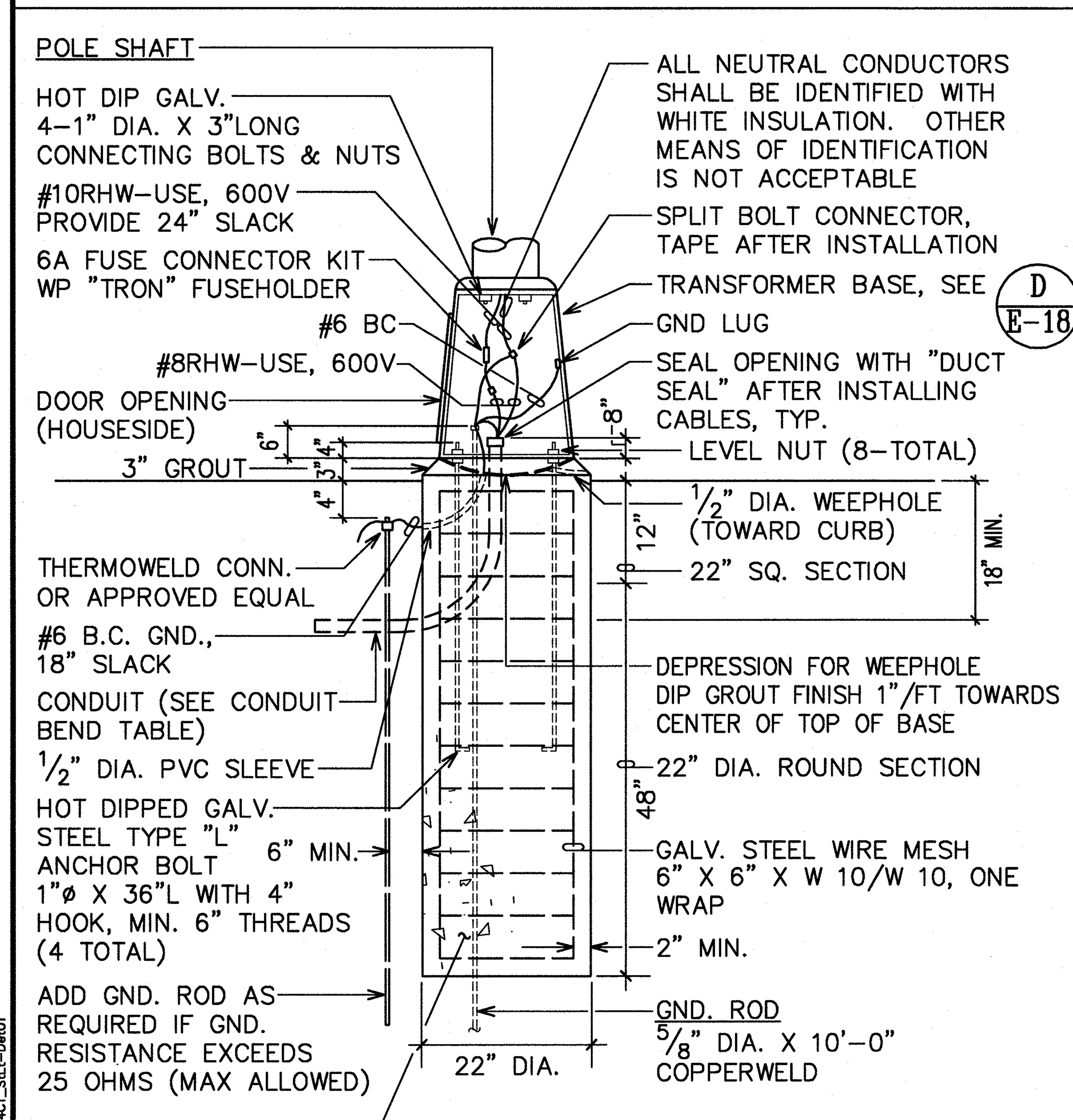

PVC SCHEDULE 40 OR 80 ELBOW				
NOMINAL CONDUIT SIZE	1 1/4"	1 1/2"	2"	3"
MINIMUM RADIUS BEND	8"	10"	12"	18"

B E-18 CONCRETE BASE ELEVATION
N.T.S.

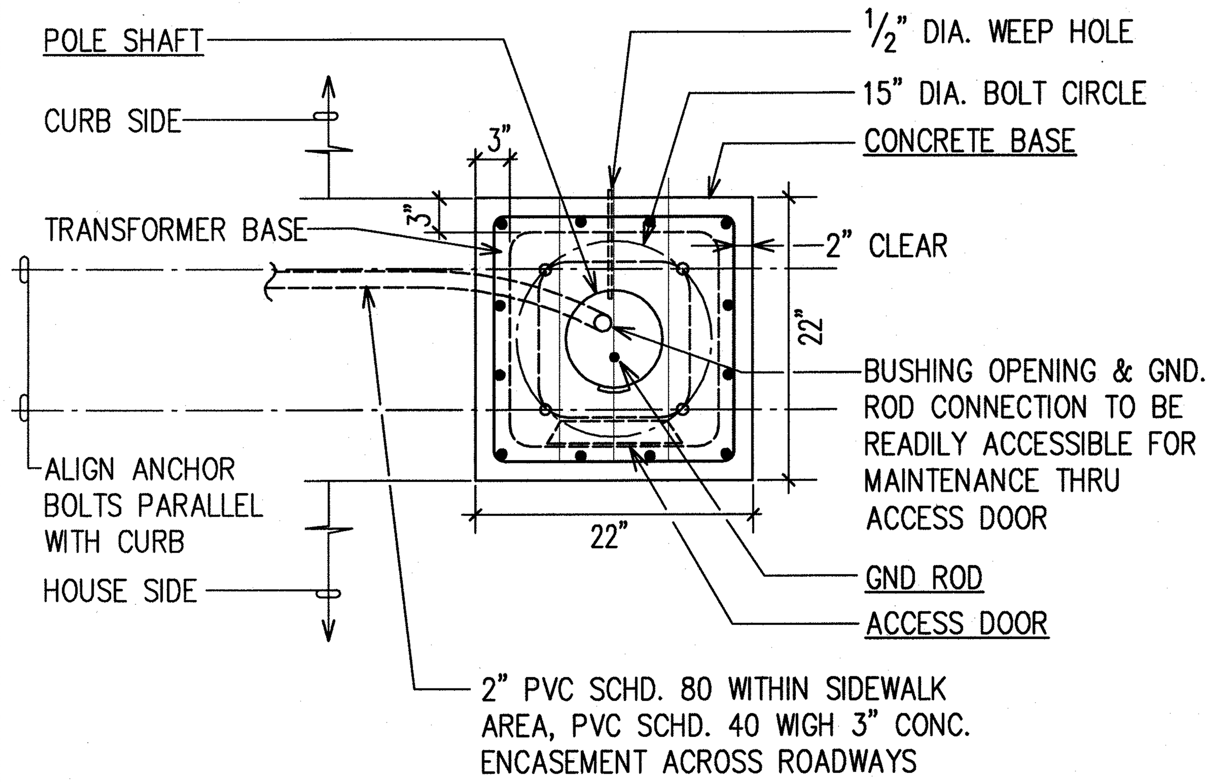

C E-18 CONCRETE BASE PLAN
N.T.S.

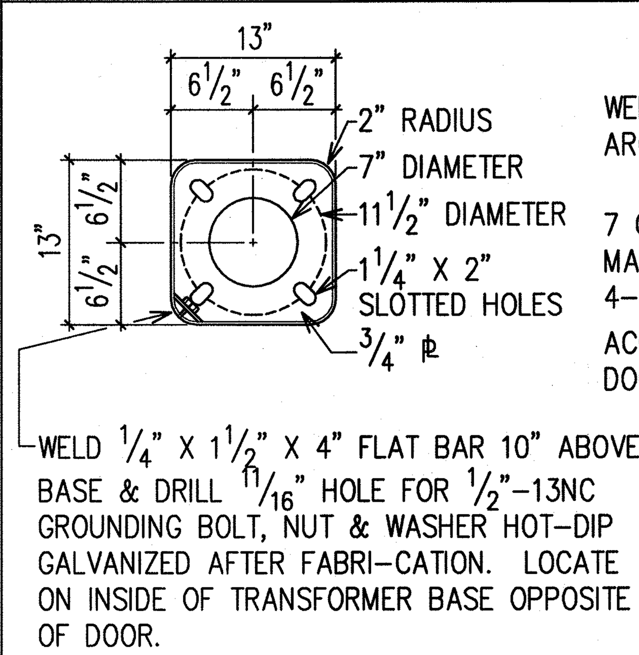

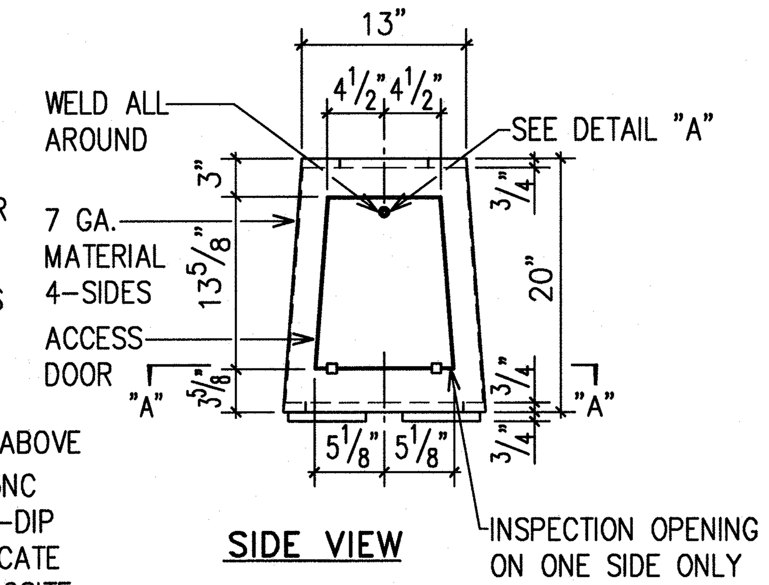

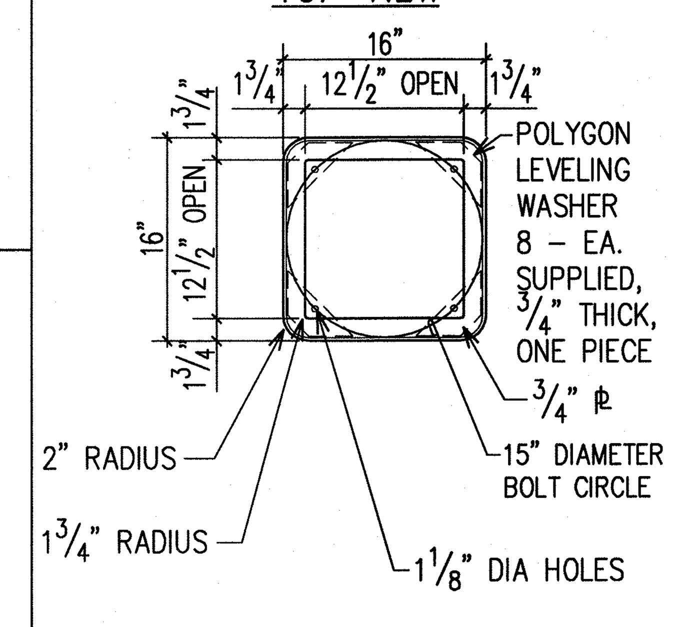

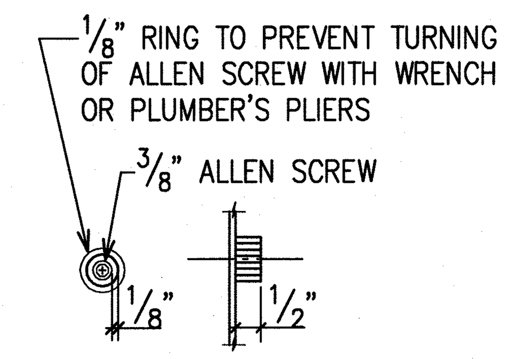

NOTES:

1. ALL STEEL SHALL CONFORM TO REQUIREMENTS OF ASTM A36 STEEL.
2. ALL WELDS SHALL BE PERFORMED BY A CERTIFIED WELDER.
3. BOLTS FOR BOLTING POLE FLANGE INCLUDED 4-1" X 4" HEX. BOLT WITH NUT & WASHER SHALL BE HOT-DIPPED GALV.
4. ENTIRE ASSEMBLY SHALL BE HOT-DIPPED GALV. AFTER FABRICATION.

D E-18 TRANSFORMER BASE DETAIL
N.T.S.

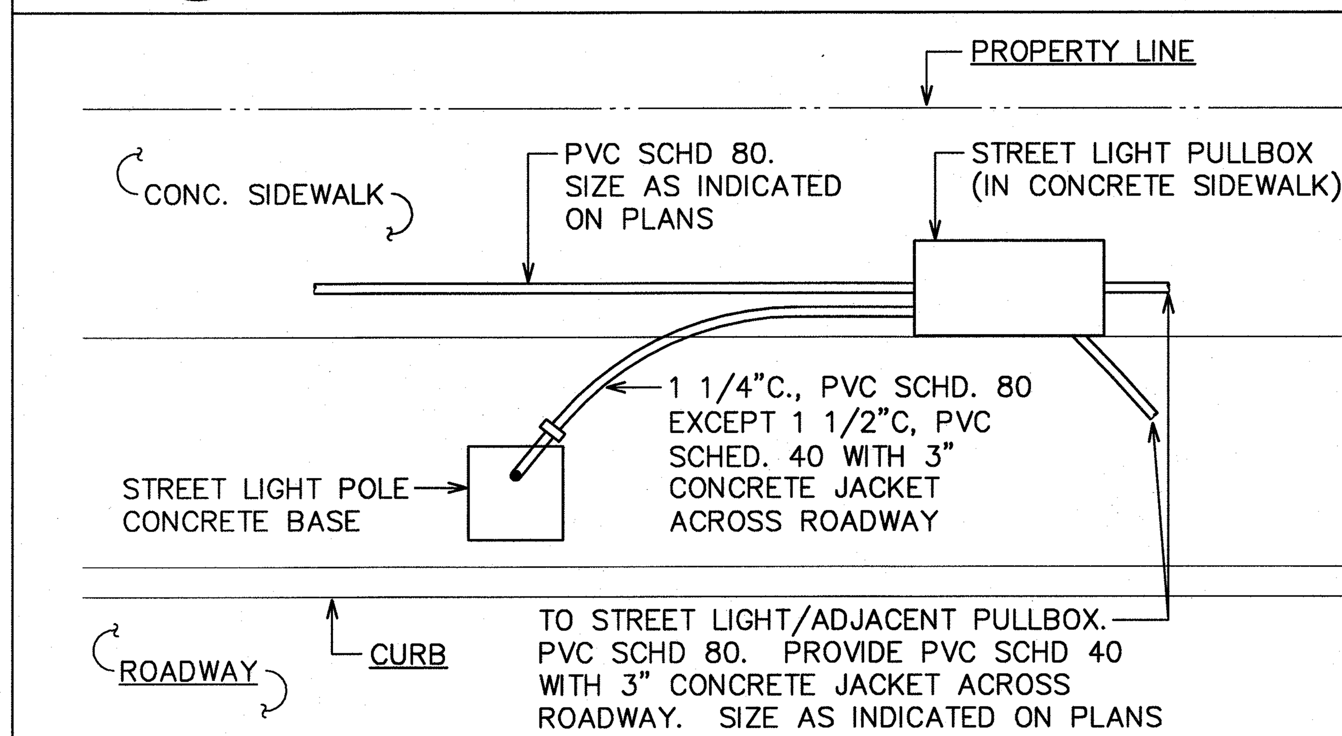

E E-18 TYPICAL STREET LIGHT/PULLBOX PLAN
NOT TO SCALE

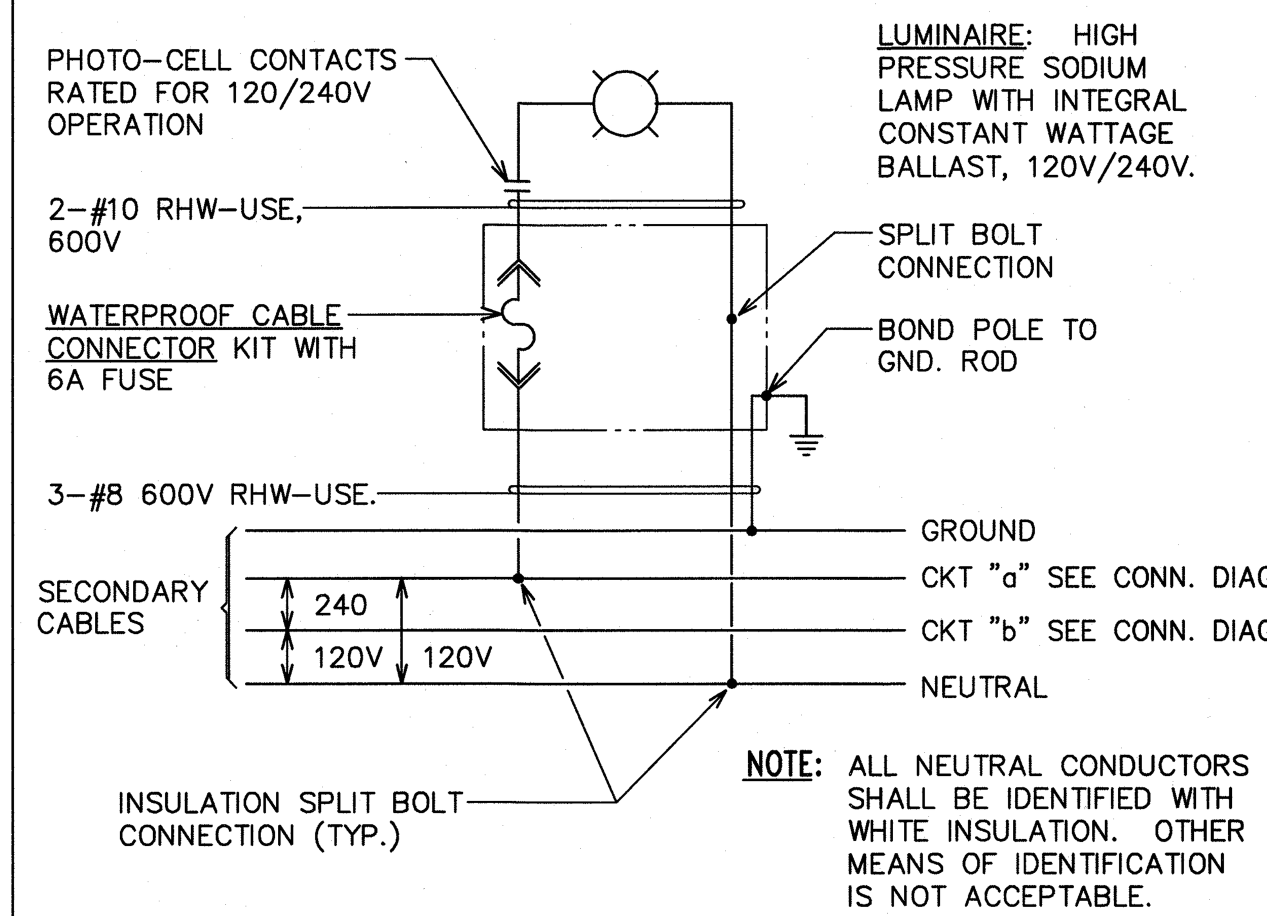

NOTE: ALL NEUTRAL CONDUCTORS SHALL BE IDENTIFIED WITH WHITE INSULATION. OTHER MEANS OF IDENTIFICATION IS NOT ACCEPTABLE.

F E-18 STREET LIGHT CONNECTION DIAGRAM
(120/240V METERED SYSTEM)

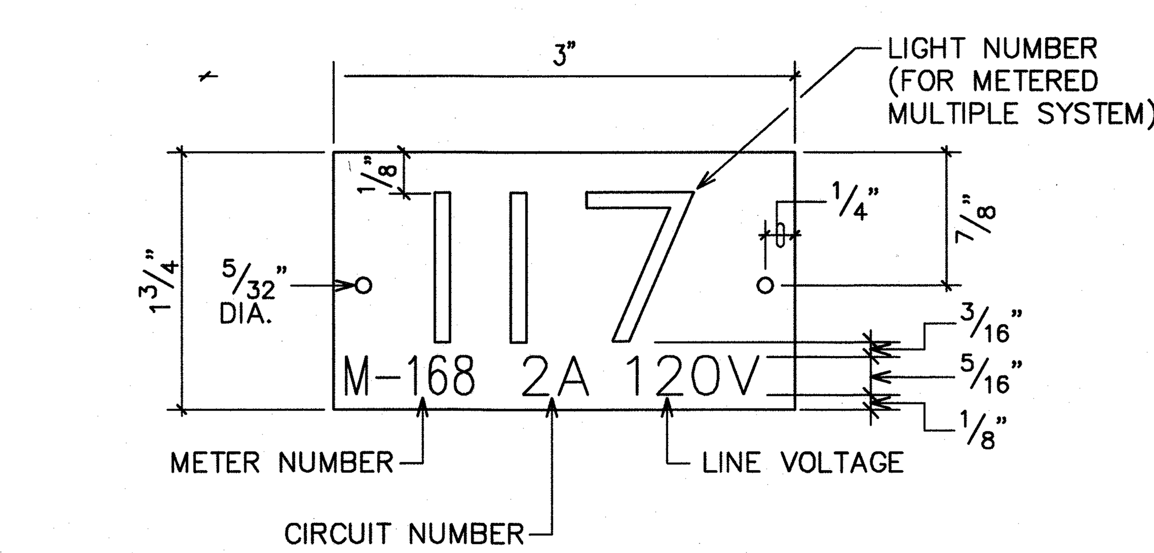

NOTES:

1. USE 2 PLY LAMINATED FLEXIBLE PLASTIC BLACK-WHITE. THICKNESS: BLACK CAP SHEET-0.010", WHITE BASE SHEET-0.052".
2. NUMBER SIZE SHALL BE 1" HIGH AND ENGRAVED 1/8" WIDE, WHITE IN COLOR (NUMBER AS REQUIRED).
3. NOMENCLATURE SIZE SHALL BE 5/16" HIGH AND ENGRAVED 1/32" WIDE, WHITE IN COLOR (METER NUMBER, CIRCUIT NUMBER AND VOLTAGE AS REQUIRED).
4. ATTACH TO ALUMINUM AND STEEL POLES WITH NO. 8 STAINLESS STEEL, 1/2" LONG DRIVE SCREWS IN 1/8" DRILL HOLE. ATTACH TO WOOD POLES WITH 4D ALUMINUM NAILS.
5. NUMBERS ARE INSCRIBED BY CUTTING THROUGH "BLACK CAP SHEET" TO EXPOSE "WHITE LETTERS".
6. ASSIGN CIRCUIT NUMBER FOR SYSTEMS WITH TWO OR MORE CIRCUITS (LETTER INDICATES PANEL BOARD, NUMBER INDICATES CIRCUIT).

G E-18 STREET LIGHT I.D. TAG DETAIL
NOT TO SCALE (METERED SYSTEM)

STREET LIGHTING NOTES:

1. PRIMARY SERVICE CABLES AND CONNECTION TO STREET LIGHT TRANSFORMER TERMINALS SHALL BE PROVIDED BY HECO AND PAID FOR BY CONTRACTOR (METERED SYSTEM). METERS NO. M-168 & M-175.
2. CONTRACTOR SHALL BE RESPONSIBLE FOR COORDINATING AND INFORMING HECO PRIOR TO INSTALLATION OF HECO CABLES.
3. CONTRACTOR TO NOTIFY & COORDINATE WORK WITH MECHANICAL/ELECTRICAL DIVISION, DEPARTMENT OF DESIGN & CONSTRUCTION, 3 WORKING DAYS IN ADVANCE OF COMMENCING INSTALLATION OF STREET LIGHT SYSTEM (PHONE 768-8431).
4. LUMINAIRES TO BE HIGH PRESSURE SODIUM (HPS) TYPE WITH I.E.S. TYPE III LIGHT DISTRIBUTION EXCEPT AS NOTED ON PLAN WATTAGES TO BE AS INDICATED ON THE PLANS.
5. TYPICAL CONSTRUCTION DETAILS TO BE PER THIS SHEET & APPLICABLE STANDARD DETAILS OF THE MECHANICAL/ELECTRICAL DIVISION, DEPARTMENT OF DESIGN & CONSTRUCTION.
6. ON BOTTOM OF PHOTO-CELL, CONTRACTOR SHALL STENCIL THE DATE OF INSTALLATION.
7. LUMINAIRE & POLE COUNT:

			M-168	M-175
POLES:	25'-0"	=	0	5
	30'-0"	=	7	24
LUMINAIRES:	100W	=	0	5
	150W	=	7	24

8. AT ALL TIMES DURING CONSTRUCTION PERIOD, CONTRACTOR SHALL MAINTAIN ONE SET OF APPROVED PLANS AT THE PROJECT SITE.
9. THE CONTRACTOR SHALL MEASURE AND RECORD THE GROUND RESISTANCE AT EACH STANDARD WITH NO EXTERNAL GROUND WIRES CONNECTED TO THE GROUND ROD. CONTRACTOR SHALL SCHEDULE GROUND RESISTANCE MEASUREMENTS 48 HOURS IN ADVANCE AND SHALL NOT PROCEED WITH MEASUREMENTS UNTIL APPROVAL IS GRANTED. SCHEDULES ARE SUBJECT TO CHANGE DEPENDING UPON WEATHER CONDITIONS. REPORTS SHALL INCLUDE NAME OF PERSONNEL CONDUCTING THE TEST, METER TYPE AND SERIAL NUMBER, DATE OF TEST AND SOIL CONDITIONS. TEST RESULTS SHALL BE CERTIFIED BY THE CONTRACTOR AND SUBMITTED TO THE CITY.
10. CONTRACTOR SHALL ARRANGE FOR HECO TO ENERGIZE STREET LIGHTS A MINIMUM OF SIX HOURS BEFORE FINAL INSPECTION & ACCEPTANCE. CONTRACTOR TO PAY FOR ALL COSTS, 6 HOURS BEFORE AND DURING INSPECTION.
11. FINAL ACCEPTANCE AND INSPECTION WILL BE UNDERTAKEN ONLY AFTER ALL WORK HAS BEEN COMPLETED & THE "AS-BUILT" VELLUM TRACINGS HAVE BEEN RECEIVED BY THE CITY & COUNTY OF HONOLULU, DEPARTMENT OF DESIGN & CONSTRUCTION.
12. UPON COMPLETION OF FINAL INSPECTION BY ENGINEER & THE CITY & COUNTY, CONTRACTOR SHALL OBTAIN WRITTEN ACCEPTANCE OF STREET LIGHT SYSTEM FROM THE MECHANICAL/ELECTRICAL DIVISION, DEPARTMENT OF DESIGN & CONSTRUCTION, CITY & COUNTY OF HONOLULU.
13. CONTRACTOR SHALL NOT BACKFILL TRENCHES UNTIL WORK IS APPROVED BY THE STREET LIGHT INSPECTOR.
14. THE CONTRACTOR SHALL INFORM THE STREET LIGHT INSPECTOR OF ALL CONCRETE POURS AT LEAST 2 WORKING DAYS IN ADVANCE. CONCRETE SHALL NOT BE POURED UNTIL APPROVAL IS GRANTED BY THE CITY AND COUNTY STREET LIGHT INSPECTOR.
15. SUBMIT SHOP DRAWINGS FOR ALL STREET LIGHT COMPONENTS INCLUDING PULLBOXES FOR APPROVAL.

GARY I. FUNASAKI
LICENSED PROFESSIONAL ENGINEER
No. 4195-E
HAWAII, U.S.A.

5 MAY 2011

THIS WORK WAS PREPARED BY ME OR UNDER MY SUPERVISION. CONSTRUCTION OF THIS PROJECT WILL BE UNDER MY OBSERVATION.
LICENSE EXPIRATION DATE: 04/30/12

REVISION DATE	DESCRIPTION	MADE BY	APPROVED

Community Planning and Engineering, Inc.
Engineering Design | Construction Management | Infrastructure Planning
1100 Alakea Street, Sixth Floor Honolulu, Hawaii

EAST KAPOLEI II DEVELOPMENT ROAD "E"

HONOULIULI, EWA, OAHU, HAWAII
(DPP SUBD. FILE NO. 2010/SUB-115)
OWNER: DEPARTMENT OF LAND AND NATURAL RESOURCES
DEVELOPER: DEPARTMENT OF HAWAIIAN HOME LANDS
TAX MAP KEY: 9-1-17: Portion 110

STREET LIGHT DETAILS I

DRAWN BY: | ENGINEER: GF | CHECKED BY: GF

APPROVED:

DATE — CHIEF, TRAFFIC REVIEW BRANCH, D.P.P. 12/8/11 DATE

DATE — CHIEF, MECHANICAL/ELECTRICAL DIVISION, D.D.C. 5/12/2011 DATE

DWG. NO. E-18 SHEET 50 OF 61 SHEETS

FILE	POCKET	FOLDER	NO.

LAST SAVE: 03/17/11 @ 09:56:49 BY: RN PLOT SC 1'-0"=1'
Z:\ACAD\PROJECTS\29084C1\E18_29084C1_StLt-Det01