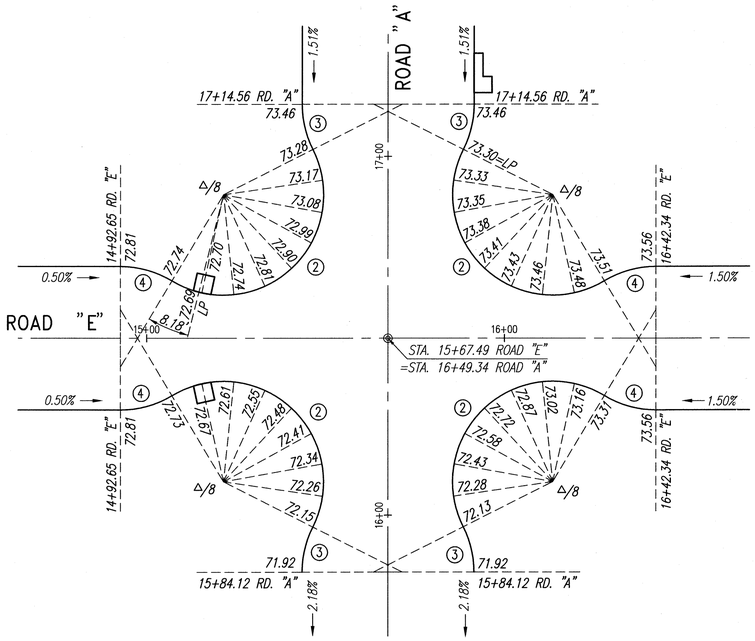

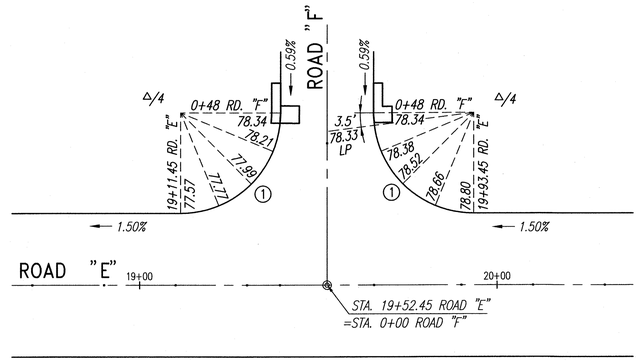

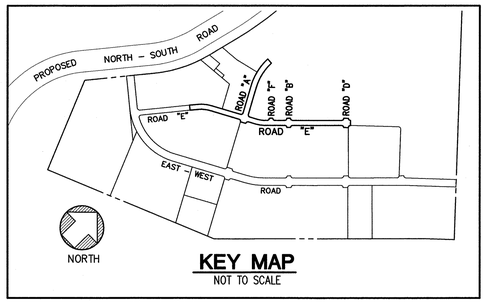

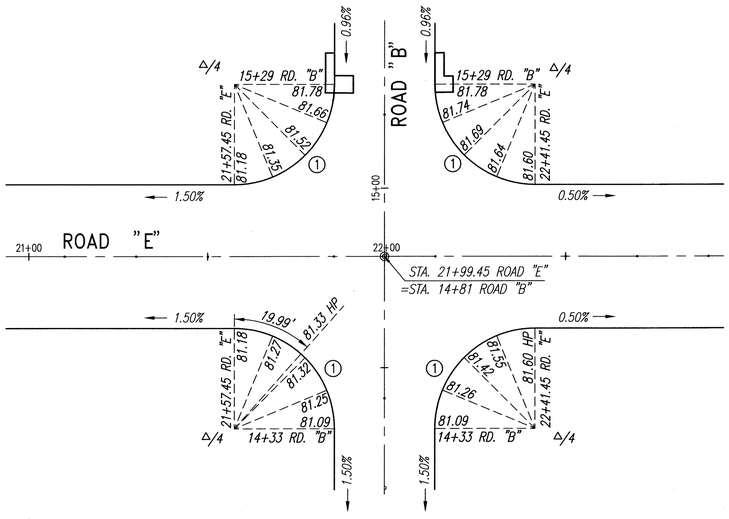

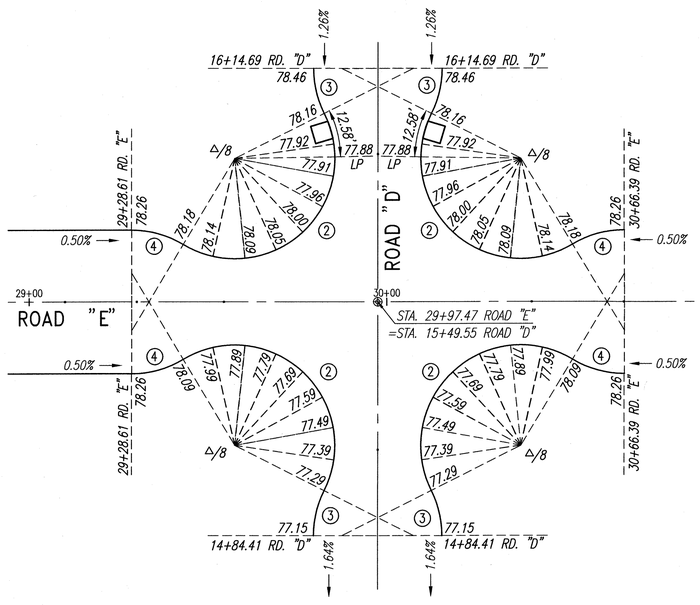

CURB DATA				
CURVE	1	2	3	4
Δ	45°00'00"	147°46'06"	26°45'56"	31°00'10"
Δ/2	22°30'00"	73°53'03"	13°22'58"	15°30'05"
R	28.00'	28.00'	28.00'	28.00'
T	28.00'	96.91'	6.66'	7.77'
C	39.60'	53.80'	12.96'	14.97'
Lc	43.98'	72.21'	13.08'	15.15'

CURB RETURNS

SCALE: 1"=20'

20 10 0 20 40

Graphic Scale in Feet

ANSON M. MURAYAMA
LICENSED PROFESSIONAL ENGINEER
No. 6975-C
HAWAII, U.S.A.

THIS WORK WAS PREPARED BY ME OR UNDER MY SUPERVISION. CONSTRUCTION OF THIS PROJECT WILL BE UNDER MY OBSERVATION. LICENSE EXPIRATION DATE: 04/30/12

REVISION DATE	DESCRIPTION	MADE BY	APPROVED

cp&e Community Planning and Engineering, Inc.
Engineering Design | Construction Management | Infrastructure Planning
1100 Alakea Street, Sixth Floor Honolulu, Hawaii

EAST KAPOLEI II DEVELOPMENT
ROAD "E"

HONOULIULI, EWA, OAHU, HAWAII
(DPP SUBD. FILE NO. 2010/SUB-115)
OWNER: DEPARTMENT OF LAND AND NATURAL RESOURCES
DEVELOPER: DEPARTMENT OF HAWAIIAN HOME LANDS
TAX MAP KEY: 9-1-17: Portion 110

CURB RETURNS

DRAWN BY: LYLT | ENGINEER: SS, FJC | CHECKED BY: AMM

APPROVED:

1/24/12
CHIEF, CIVIL ENGINEERING BRANCH, D.P.P. DATE

DWG. NO. C-15 SHEET 16 OF 61 SHEETS

FILE	POCKET	FOLDER	NO.

P:\Land Projects\DHHL East Kapolei II\Road E\Construction Drawings\Government Review #4416 CURB RETURNS_GR#4.dwg, 16 CURB RETURNS, 10/5/2011 10:22:42 AM, 1:1