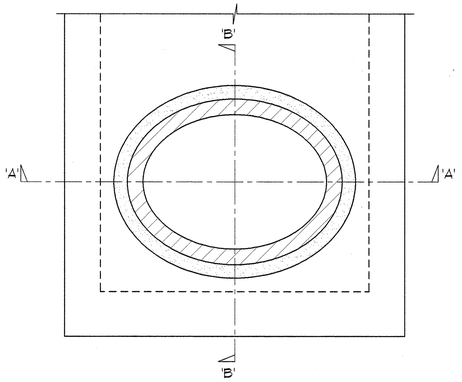

WALL ELEVATION

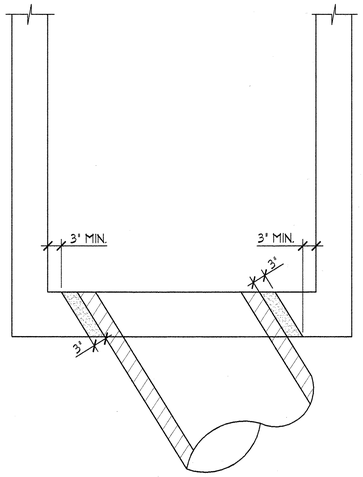

SECTION 'A-A'

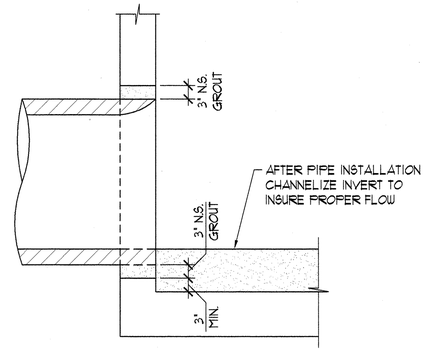

SECTION 'B-B'

PIPE OPEN'G LIMITATIONS FOR PRECAST BOXES

N.T.S.

A / S-1

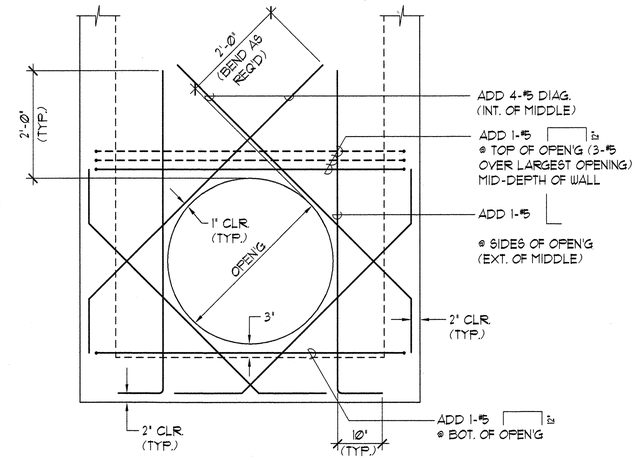

ELEVATION

TYPICAL ADDED REINF. AROUND PIPE OPEN'G FOR P.C.B.

N.T.S.

B / S-1

DRAINAGE STRUCTURE NOTES

1. ALL WORK SHALL CONFORM TO THE 'STANDARD SPECIFICATIONS FOR PUBLIC WORKS CONSTRUCTION' (LATEST).

2. CONCRETE SHALL HAVE A MINIMUM 28 DAY COMPRESSIVE STRENGTH & A MAXIMUM WATER TO CEMENT RATIO AS FOLLOWS:

	STRENGTH	W/C RATIO
DMH & CB	4,000 PSI	0.48

3. ALL REINFORCING STEEL SHALL CONFORM TO ASTM A615 GRADE 60.

4. MINIMUM COVER IN INCHES FOR REBARS FOR CAST-IN-PLACE AND PRECAST CONCRETE EXCEPT AS NOTED:

CONCRETE CAST AGAINST EARTH (C.I.P.)	3"
FORMED CONCRETE EXPOSED TO EARTH OR WEATHER	2"

5. UNLESS OTHERWISE NOTED, SPLICES, LAPS, DOWEL EXTENSIONS AND EMBEDMENTS SHALL BE 40 BAR DIAMETERS MINIMUM.

6. ALL REINFORCING BARS MARKED 'CONT.' OR 'TEMP.' SHALL BE LAPPED 40 BAR DIAMETERS MINIMUM.

7. STAGGER ALL SPLICES WHERE POSSIBLE.

8. REBARS SHALL BE SUPPORTED, BENT AND PLACED AS PER 'MANUAL OF STANDARD PRACTICE FOR DETAILING CONCRETE STRUCTURES' ACI 315 (LATEST).

9. AT TIME CONCRETE IS PLACED, REINFORCING SHALL BE FREE FROM MUD, OIL, LAITANCE OR OTHER SUBSTANCES ADVERSELY AFFECTING BOND CAPACITY.

10. FOR REINFORCING NOT SHOWN ON THE PLANS, FOLLOW LATEST APPROVED VERSION OF THE 'STANDARD DETAILS FOR PUBLIC WORK CONSTRUCTION' (STANDARD DETAILS).

11. REINFORCEMENT, ANCHOR BOLTS, DOWELS AND ALL OTHER EMBEDDED ITEMS SHALL BE POSITIVELY SECURED BEFORE POURING.

DESIGN CRITERIA

1. AASHTO LRFD BRIDGE DESIGN SPECIFICATIONS BRIDGES FOURTH EDITION 2007:

LIVE LOAD: HL-93 (IN TRAFFIC AREAS)
250 PSF (NON-TRAFFIC AREAS)

60 PCF ACTIVE PRESSURE (TOP RESTRAINED)

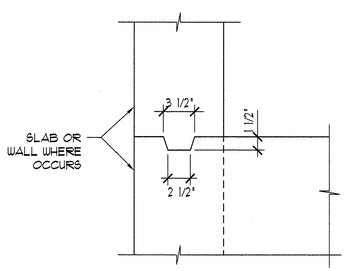

TYPICAL KEY DETAIL

SC: 1 1/2"=1'-0"

C / S-1

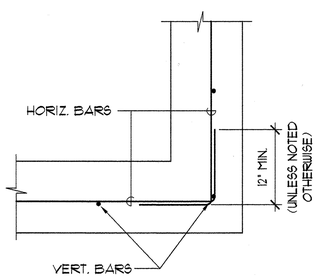

PLAN

TYP. CORNER REINFORCEMENT LAPPING

N.T.S.

D / S-1

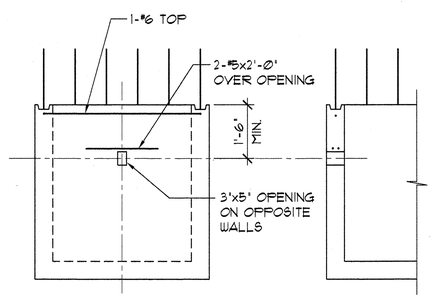

TYPICAL LIFTING EYE DETAIL FOR PRECAST BOX

N.T.S.

E / S-1

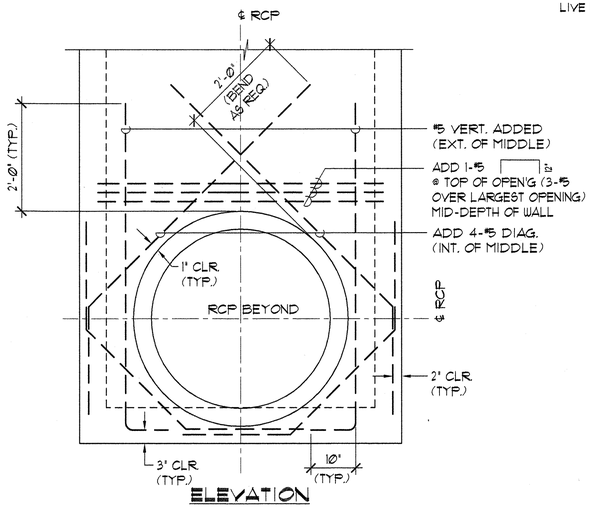

ELEVATION

TYP. ADDED REINF. AT PIPES FOR C.I.P. CONSTR.

N.T.S.

F / S-1

THOMAS Y. TANIMURA
LICENSED PROFESSIONAL ENGINEER
No. 4926-S
HAWAII, U.S.A.

04/30/12
Expiration Date of the License

THIS WORK WAS PREPARED BY ME OR UNDER MY SUPERVISION AND CONSTRUCTION OF THIS PROJECT WILL BE UNDER MY OBSERVATION.

REVISION DATE	DESCRIPTION	MADE BY	APPROVED

Community Planning and Engineering, Inc.
Engineering Design | Construction Management | Infrastructure Planning
1100 Alakea Street, Sixth Floor Honolulu, Hawaii

EAST KAPOLEI II DEVELOPMENT ROAD "E"

HONOULIULI, EWA, OAHU, HAWAII
(DPP SUBD. FILE NO. 2010/SUB-115)
OWNER: DEPARTMENT OF LAND AND NATURAL RESOURCES
DEVELOPER: DEPARTMENT OF HAWAIIAN HOME LANDS
TAX MAP KEY: 9-1-17: PORTION 110

GENERAL NOTES & TYPICAL DETAILS

DRAWN BY: HM	ENGINEER: TT	CHECKED BY: TT

APPROVED:

1/24/12
CHIEF, CIVIL ENGINEERING BRANCH, D.P.P. DATE

DWG. NO. S-1 SHEET 15 OF 61 SHEETS

FILE	POCKET	FOLDER	NO.