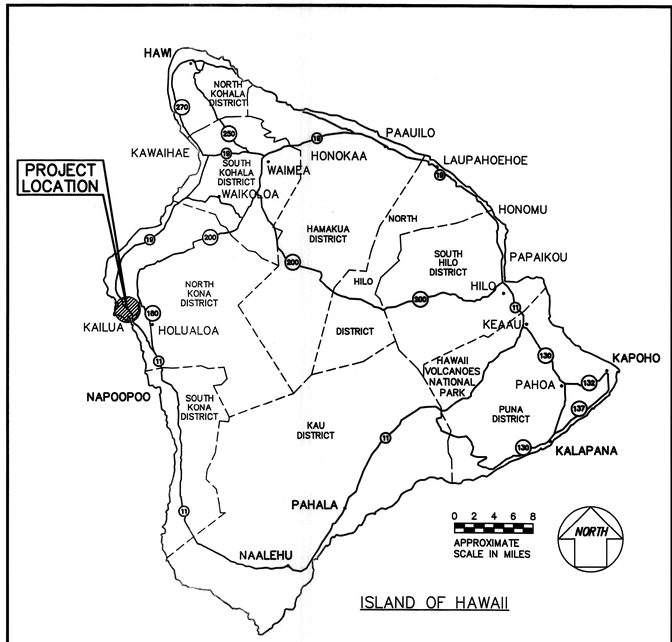

CONSTRUCTION PLANS FOR

LA'I'ŌPUA VILLAGE 4 SUBDIVISION PHASE 1 - 'ĀKAU

KAILUA-KONA, NORTH KONA, HAWAII

OWNER / DEVELOPER: DEPARTMENT OF HAWAIIAN HOME LANDS
91-5420 KAPOLEI PARKWAY
KAPOLEI, HAWAII 96707

TAX MAP KEY : (3) 7-4-21:10 & PORTION 12
SUBDIVISION APPLICATION NO: SUB-05-000170
DPW FOLDER NO.: 74139-A

PREPARED BY:
ENGINEERS SURVEYORS HAWAII, INC.
1320 NORTH SCHOOL STREET, SUITE 1
HONOLULU, HAWAII 96817

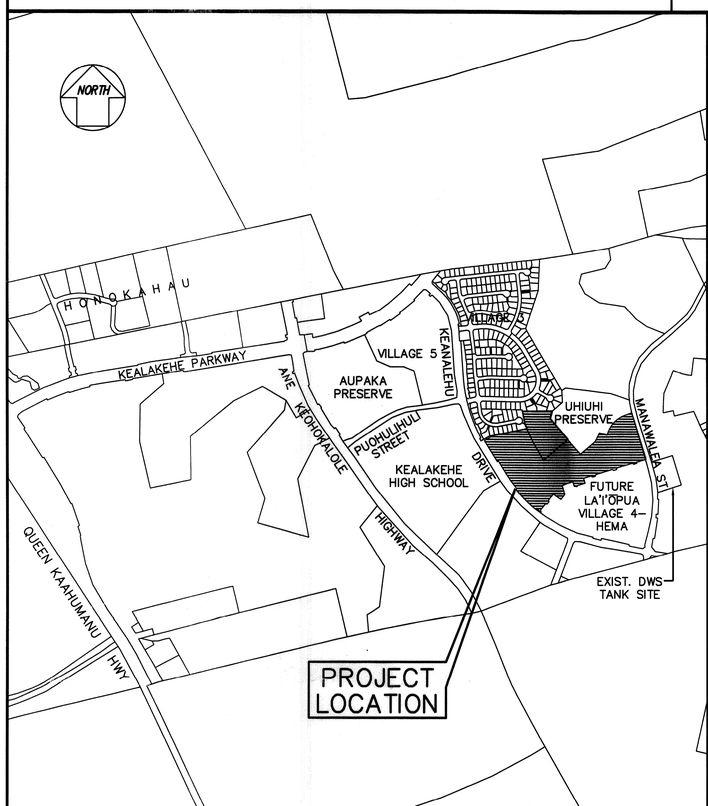

LOCATION MAP

APPROVED BY:

CHAIRMAN, HAWAIIAN HOMES COMMISSION STATE OF HAWAII	DATE
DIRECTOR, PLANNING DEPARTMENT COUNTY OF HAWAII	DATE
DIRECTOR, DEPARTMENT OF PUBLIC WORKS COUNTY OF HAWAII (PUD PERMIT NO. 05-000003)	DATE
for Kurt Y. Inaba MANAGER-CHIEF ENGINEER, DEPARTMENT OF WATER SUPPLY (x.a.) COUNTY OF HAWAII	4/11/13 DATE
Dora Beal DIRECTOR, DEPARTMENT OF ENVIRONMENTAL MANAGEMENT COUNTY OF HAWAII	5/1/13 DATE
CHIEF, ENVIRONMENTAL MANAGEMENT DIVISION DEPARTMENT OF HEALTH STATE OF HAWAII	DATE

INDEX TO DRAWINGS

SHEET NO.	DESCRIPTION
1	TITLE SHEET
2–3	GENERAL NOTES AND DETAILS
4	GENERAL SITE PLAN
5	DRAINAGE DESIGN DATA
6	TYPICAL ROAD SECTIONS & MISCELLANEOUS DETAILS
7	PLAN AND PROFILE – (ROAD "A") MAUA PLACE
8	PLAN AND PROFILE – (ROAD "B") ŌHEMAKAI STREET
9–10	PLAN AND PROFILE – (ROAD "C") KO'OKO'OLAU STREET
11	PLAN AND PROFILE – (ROAD "D") NANEA PLACE AND (ROAD "H") 'ILIE'E PLACE
12	PLAN AND PROFILE – (ROAD "E") 'ŌHELOKAI PLACE AND (ROAD "F") KĀWELU PLACE
13	PLAN AND PROFILE – ROAD "G" (KOAI'A STREET)
14–15	CURB RETURN DATA & CURB RAMP DETAIL
16	GRADING PLAN FOR LOTS 1 TO 18 INCLUSIVE & SOIL RECOMMENDATIONS
17	LOT GRADING PLAN FOR LOT 70 (INCLUDING CONCRETE DRIVEWAY & CONCRETE DRAINAGE SWALE)
18	IMPROVEMENT PLAN FOR CBU LOT
19	PARK SITE DRAINAGE PLAN
20	SIGNAGE & STRIPING PLAN
21	TRAFFIC CONTROL PLAN
22	S.I.C. EASEMENT WALL (LOT 119)
23	PRIVACY FENCE PLAN
24	STANDARD DETAILS – DRYWELL
25	PRESSURE REDUCING VALVE DETAILS
L–1	PRESERVE BARRIER WALL DEMOLITION AND REPLACEMENT PLAN
L–2	PRESERVE BARRIER WALL DETAILS
S–1 TO S–4	STRUCTURAL PLANS
E–1 TO E–15	ELECTRICAL PLANS

Y:\2009\59-026 Laiopua Village-4\Working Folder\01-TITLE - LAIOPUA.DWG Thu, Feb 21 2013 - 8:58am
ENSH plot 1:1

LA'I'ŌPUA VILLAGE 4 SUBDIVISION, PHASE 1 - 'ĀKAU

FILE	POCKET	FOLDER	NO.

GENERAL NOTES:

1. THE CONTRACTOR SHALL VERIFY THE LOCATIONS OF ALL EXISTING VALVE BOXES, MANHOLE COVERS AND CENTERLINE MONUMENTS AND SHALL HAVE THEM RAISED TO MEET THE NEW PAVEMENT GRADE.
2. EXISTING PAVEMENT SHALL BE BROOMED OFF AND SHALL RECEIVE A TACK COAT OF 0.15 GALLON PER SQUARE YARD OF EMULSIFIED ASPHALT (SS-1) BEFORE PLACING A.C. PAVEMENT. THE COST OF THE TACK COAT SHALL BE INCIDENTAL TO THE A.C. PAVEMENT.
3. THE CONTRACTOR SHALL PROVIDE A SMOOTH-RIDING CONNECTION TO EXISTING STREETS.
4. PAVEMENT STRIPING, INCLUDING CENTERLINE, CROSSWALK, STOP LINES, ETC. AND RAISED PAVEMENT MARKERS SHALL CONFORM TO THE COUNTY STANDARDS FOR PAVEMENT MARKINGS AND STRIPING NOTES OR AS MODIFIED BY THE DETAILS ON THESE PLANS.
5. THE CONTRACTOR, AT HIS OWN EXPENSE, SHALL KEEP THE PROJECT AND SURROUNDING AREAS FREE FROM DUST NUISANCES. THE WORK SHALL BE IN CONFORMANCE WITH THE AIR POLLUTION CONTROL RULES OF THE STATE DEPARTMENT OF HEALTH, HAR 11-60.1, FUGITIVE DUST.
6. THE CONTRACTOR SHALL PROVIDE AT LEAST ONE (1) LANE FOR TRAFFIC MOVEMENT AT ALL TIMES. TWO (2) LANES FOR TRAFFIC MOVEMENT SHALL BE PROVIDED BETWEEN THE HOURS OF 3:30 P.M. TO 8:00 A.M.
7. THE CONTRACTOR, AT HIS OWN EXPENSE, SHALL COORDINATE THE REFERENCING OF THE CENTERLINE MONUMENTS TO BE RECONSTRUCTED BY A SURVEYOR LICENSED TO PRACTICE IN THE STATE OF HAWAII. AFTER PAVING, THE SURVEYOR SHALL LOCATE THE MONUMENTS, AND AFTER RECONSTRUCTION OF THE MONUMENTS, THE SURVEYOR SHALL PUNCH THE CENTERLINE LOCATION ON THE BRASS PINS. THE SURVEYOR SHALL SUBMIT WRITTEN CERTIFICATION OF THE INSTALLATION AND LOCATION OF THE CENTERLINE MONUMENTS TO THE ENGINEER.
8. THE CONTRACTOR SHALL BE RESPONSIBLE FOR ANY DAMAGE DONE TO THE DWS EXISTING WATER SYSTEM.

CONSTRUCTION NOTES:

A. ALL WORK SHALL BE DONE IN ACCORDANCE WITH THE COUNTY OF HAWAII, DEPARTMENT OF PUBLIC WORKS "STANDARD DETAILS FOR PUBLIC WORKS CONSTRUCTION," DATED SEPTEMBER 1984, AND "STANDARD SPECIFICATIONS FOR PUBLIC WORKS CONSTRUCTION" DATED SEPTEMBER 1986.

9. CONSTRUCTION SHALL BE DONE IN SUBSTANTIAL CONFORMANCE WITH THE SUBSURFACE INVESTIGATION REPORT, "LAIOPUA VILLAGE 4 AKAU AND HEMA SUBDIVISIONS" DATED MARCH 22, 2012, BY FEWELL GEOTECHNICAL ENGINEERING, LTD. WHERE APPLICABLE.
3. THE ENGINEER RESERVES THE RIGHT TO MAKE CHANGES TO THE DRAINAGE SYSTEM AS SUCH CHANGES ARE FOUND TO BE NECESSARY AS THE LAND IS CLEARED AND EROSION CONTROL CONSTRUCTION PROGRESSES.
4. ALL CONSTRUCTION LINES, GRADES AND SURVEY MONUMENT STAKEOUTS SHALL BE MADE BY LICENSED SURVEYORS.
5. A LICENSED SURVEYOR SHALL SUBMIT A LETTER TO THE DEPARTMENT OF PUBLIC WORKS CERTIFYING THAT THE MONUMENT STAKEOUT AND INSTALLATION IS CORRECT.
6. THE CONTRACTOR SHALL NOTIFY THE ENGINEER SUFFICIENTLY IN ADVANCE OF OPENING ANY OR UTILIZING EXISTING BORROW PITS OR ON SITE BORROW, SO THAT A DETERMINATION CAN BE MADE AS TO THE SUITABILITY OF THE BORROW MATERIAL TO BE INCORPORATED INTO THE ROAD CONSTRUCTION.
7. THE CONTRACTOR SHALL CONDUCT ALL TESTS AS REQUESTED BY THE ENGINEER AND BE RESPONSIBLE FOR ALL EXPENSES INCURRED IN CONDUCTING THESE TESTS.
8. THE CONTRACTOR SHALL VERIFY THE LOCATION OF ALL EXISTING UTILITIES, WHETHER SHOWN ON THE PLAN OR NOT, AND SHALL BE RESPONSIBLE FOR THE REPAIR OR REPLACEMENT OF THE SAME IN THE EVENT OF DAMAGES DUE TO HIS CONSTRUCTION PRACTICES. THE CONTRACTOR SHALL COORDINATE HIS WORK WITH THE RESPECTIVE UTILITY COMPANIES.
9. THE CONTRACTOR SHALL PROVIDE AND INSTALL ALL TRAFFIC CONTROL DEVICES IN CONFORMANCE WITH THE CURRENT EDITION OF THE "MANUAL ON UNIFORM TRAFFIC CONTROL DEVICES FOR STREETS AND HIGHWAYS," AND AS DIRECTED BY THE DEPARTMENT OF PUBLIC WORKS.
10. ALL VEGETATION, INCLUDING TREES, SHALL BE REMOVED FROM WITHIN THE ENTIRE GRADED ROADWAY RIGHT-OF-WAY.

NATIONAL POLLUTANT DISCHARGE ELIMINATION SYSTEM (NPDES) REQUIREMENTS FOR PERMIT PROJECTS WITHIN STATE HIGHWAY RIGHT-OF-WAY:

1. THE CONTRACTOR SHALL OBTAIN AND COMPLY WITH THE NATIONAL POLLUTANT DISCHARGE ELIMINATION SYSTEM NPDES REQUIREMENTS FOR HAWAII DISTRICT PERMIT PROJECTS. THIS IS AVAILABLE AT THE HAWAII DISTRICT OFFICE AT 50 MAKAALA STREET, HILO, HAWAII (PH. 933-8866). DUE TO POTENTIAL COST IMPACTS, THE CONTRACTOR NEEDS TO BE AWARE OF THESE REQUIREMENTS.
2. THE CONTRACTOR SHALL COMPLETE AND SUBMIT A CONTRACTOR'S CERTIFICATION OF NPDES COMPLIANCE, INCLUDING COMPLETION OF THE BEST MANAGEMENT PRACTICE (BMP) CHECKLIST AND SUBMITTAL OF A WRITTEN BMP PLAN AND DRAWINGS, PRIOR TO ISSUANCE OF THE "PERMIT TO PERFORM WORK UPON STATE HIGHWAYS" OR "APPLICATION & PERMIT FOR THE OCCUPANCY AND USE OF STATE HIGHWAY RIGHT-OF-WAY".
3. THE CONTRACTOR SHALL OBTAIN A GENERAL NPDES PERMIT FROM THE DEPARTMENT OF HEALTH FOR ANY PROJECT 1 ACRE OR GREATER IN AREA, PRIOR TO THE ISSUANCE OF THE PERMIT TO PERFORM WORK UPON STATE HIGHWAYS.

DEPARTMENT OF HEALTH NOTES:

1. OWNER SHALL OBTAIN PERMIT TO CONSTRUCT AND OPERATE INJECTION WELL(S) IN COMPLIANCE WITH CHAPTER 23, UNDERGROUND INJECTION CONTROL (UIC), ADMINISTRATIVE RULES, DEPARTMENT OF HEALTH.

UIC DRYWELL NOTE:

1. THE SUBDIVIDER SHALL BE INFORMED THAT IF DRYWELLS ARE INCLUDED IN THE SUBJECT SUBDIVISION IMPROVEMENTS, CHAPTER 23, UNDERGROUND INJECTION CONTROL (UIC), ADMINISTRATIVE RULES, DEPARTMENT OF HEALTH, PROHIBITS ANY PERSON FROM OPERATING, CONSTRUCTING OR MODIFYING AN INJECTION WELL (DRYWELL) UNLESS AUTHORIZED BY A PERMIT ISSUED BY THE DIRECTOR OF HEALTH, STATE OF HAWAII. FURTHERMORE, SHOULD DEDICATION OF ROADWAYS INCLUDING DRYWELLS BE CONTEMPLATED, THE DEPARTMENT OF PUBLIC WORKS WILL NOT APPROVE DEDICATION ROADWAYS PRIOR TO COMPLIANCE WITH CHAPTER 23, UIC, ADMINISTRATIVE RULES.

NOTES FOR WORK WITHIN THE COUNTY RIGHT-OF-WAY:

1. ALL WORK SHALL BE DONE IN ACCORDANCE WITH THE COUNTY OF HAWAII, DEPARTMENT OF PUBLIC WORKS (DPW), "STANDARD SPECIFICATIONS FOR PUBLIC WORKS CONSTRUCTION," DATED SEPTEMBER 1986 AND "STANDARD DETAILS FOR PUBLIC WORKS CONSTRUCTION," DATED SEPTEMBER 1984.
2. THE CONTRACTOR SHALL VERIFY THE LOCATION OF ALL EXISTING UTILITIES, WHETHER SHOWN ON THE PLAN OR NOT, AND SHALL BE RESPONSIBLE FOR THE REPAIR OR REPLACEMENT OF SAME IN THE EVENT OF DAMAGES DUE TO HIS CONSTRUCTION PRACTICES. THE CONTRACTOR SHALL COORDINATE HIS WORK WITH THE RESPECTIVE UTILITY COMPANIES.
3. THE CONTRACTOR SHALL PROVIDE AND INSTALL ALL TRAFFIC CONTROL DEVICES IN CONFORMANCE WITH THE CURRENT EDITION OF THE "MANUAL ON UNIFORM TRAFFIC CONTROL DEVICES FOR STREETS AND HIGHWAYS," AND AS DIRECTED BY THE DEPARTMENT OF PUBLIC WORKS.
4. THE CONTRACTOR SHALL NOTIFY THE DEPARTMENT OF PUBLIC WORKS 48 HOURS BEFORE THE COMMENCEMENT OF ANY UTILITY LINE WORK TO SCHEDULE A FIELD REVIEW AND SECURE APPROVAL OF THE PROPOSED UTILITY LINE LOCATION WITHIN THE COUNTY RIGHT-OF-WAY.
5. THE PROPOSED UTILITY LINE LOCATION SHALL BE LAID OUT IN THE FIELD PRIOR TO THE CONDUCTING OF THE FIELD REVIEW BY THE DEPARTMENT OF PUBLIC WORKS.
6. FIELD ADJUSTMENTS SHALL BE MADE AS DIRECTED BY THE DEPARTMENT OF PUBLIC WORKS PRIOR TO THE COMMENCEMENT OF ANY UTILITY LINE WORK.
7. THE REQUIRED PERMIT, UNDER CHAPTER 22, ARTICLE 3, SECTION 22-44 OF THE HAWAII COUNTY CODE, SHALL BE OBTAINED FROM THE DEPARTMENT OF PUBLIC WORKS BY THE CONTRACTOR FOR WORK WITHIN THE COUNTY RIGHT-OF-WAY.
8. THE CONTRACTOR SHALL PROVIDE AT LEAST ONE (1) LANE FOR TRAFFIC MOVEMENT AT ALL TIMES. TWO (2) LANES FOR TRAFFIC MOVEMENT SHALL BE PROVIDED BETWEEN THE HOURS OF 3:30 P.M. TO 8:00 A.M.
9. THE EXISTING PAVEMENT SHALL BE SAW-CUT BEFORE COMMENCEMENT OF TRENCHING WORK.
10. ANY PAVEMENT OUTSIDE THE CONTRACT ZONE LIMITS DAMAGED AS A RESULT OF CONSTRUCTION OPERATIONS SHALL BE RESTORED TO ITS ORIGINAL CONDITION, OR BETTER, AS DIRECTED BY THE DPW.
11. A TEMPORARY COLD MIX PATCH SHALL BE APPLIED IMMEDIATELY UPON COMPLETION OF THE BACKFILLING OPERATION AND SHALL BE MAINTAINED BY THE CONTRACTOR UNTIL A PERMANENT PATCH IS AUTHORIZED BY THE DEPARTMENT OF PUBLIC WORKS.
12. NO MATERIAL, EXCEPT THE TRENCH EXCAVATED MATERIAL, SHALL BE STOCKPILED CLOSER THAN SIX (6) FEET FROM THE EXISTING EDGE OF PAVEMENT.
13. NO CONSTRUCTION EQUIPMENT SHALL BE PARKED WITHIN THE ROAD RIGHT-OF-WAY IN SUCH A MANNER THAT THE EQUIPMENT WILL OBSTRUCT THE NORMAL MOVEMENT AND SIGHT DISTANCE OF THE DRIVING MOTORIST, EXCEPT DURING ACTUAL WORKING HOURS.
14. EXCEPT DURING ACTUAL WORKING HOURS, ALL SIGNS THAT DO NOT PERTAIN TO THE CONSTRUCTION ACTIVITY, SUCH AS "MEN WORKING" AND "FLAGMAN AHEAD" SHALL BE COVERED OR LAID DOWN. HOWEVER, ALL SIGNS NECESSARY FOR THE SAFETY OF THE PUBLIC SHALL BE MAINTAINED.
15. ANY PAVEMENT MARKINGS, STRUCTURES, AND APPURTENANCES (WITHIN OR OUTSIDE OF THE CONTRACT ZONE LIMITS) DAMAGED AND/OR WORN AWAY UNDER THE PERMIT SHALL BE REPAINTED OR RECONSTRUCTED AS DIRECTED BY THE DEPARTMENT OF PUBLIC WORKS.
16. NO TRENCHING SHALL BE LEFT OPEN FOR MORE THAN FIVE (5) WORKING DAYS.
17. SHOULD TRENCHING OCCUR THROUGH AN EXISTING SIDEWALK OR SHOULD DAMAGES OCCUR TO THE SIDEWALK AS A RESULT OF TRENCHING, THE FOLLOWING PROCEDURE SHALL BE UTILIZED TO REPAIR THE SIDEWALK.
    - A. ALL PORTLAND CEMENT CONCRETE TO BE REMOVED SHALL FIRST BE CUT WITH A CONCRETE SAW THAT HAS A DIAMOND OR CARBORUNDUM ABRASIVE WHEEL. THOSE CUTS SHALL BE MADE TO A DEPTH EQUAL TO AT LEAST ONE-FOURTH OF THE DEPTH OF THE SLAB, OR ENOUGH AS IS DEEMED NECESSARY BY THE DEPARTMENT OF PUBLIC WORKS, TO PERMIT BREAKING OUT THE BALANCE OF THE CONCRETE WITHOUT SPALLING OFF THE EXPOSED EDGES OF THE SLAB LEFT IN PLACE.
    - B. IF ANY CONCRETE BLOCK IS TOUCHED, THE WHOLE BLOCK SHALL BE REMOVED AND LATER REPLACED, UNLESS A MINOR VARIATION IS AUTHORIZED BY THE DPW OR ITS REPRESENTATIVE.
    - C. ANY DAMAGES TO ADJACENT AREAS DUE TO SETTLEMENT OR TO ANY OTHER EFFECTS WHATSOEVER CAUSED BY THE TRENCH CONSTRUCTION SHALL BE PROPERLY REPAIRED AND CORRECTED.
    - D. ALL OTHER INCIDENTAL WORK SHALL BE SATISFACTORILY PERFORMED TO EFFECT THE PROPER RESTORATION OF THE SIDEWALK AREA.
    - E. SHOULD DAMAGE TO A SIDEWALK, CURB AND/OR GUTTER OCCUR AT A LOCATION WHERE A CURB RAMP SHOULD EXIST, OR TO A DRIVEWAY THAT DOES NOT MEET WITH THE REQUIREMENTS OF THE AMERICANS WITH DISABILITIES ACT (ADA), REPAIR WORK SHALL INCLUDE THE CONSTRUCTION OF A CURB RAMP, RECONSTRUCTION TO THE DRIVE WAY SUCH THAT THE REPAIR WORK COMPLIES WITH THE ADA AND MEETS WITH THE APPROVAL OF THE DPW.
18. THE PERMITTEE SHALL MAINTAIN, TO THE SATISFACTION OF THE DEPARTMENT OF PUBLIC WORKS, THE AREA WORKED WITHIN THE GOVERNMENT RIGHT-OF-WAY INCLUDING ANY REPAIRS TO PAVEMENT AND SHOULDER DAMAGED AS A RESULT OF THE INSTALLATION WORK, FOR A PERIOD OF ONE (1) YEAR FROM THE DATE OF FINAL INSPECTION. THE PERMITTEE SHALL UNDERTAKE REPAIRS EXPEDITIOUSLY, WHENEVER DIRECTED BY THE DEPARTMENT OF PUBLIC WORKS DURING THE MAINTENANCE PERIOD.

COMPACTION TESTING:

THE CONTRACTOR SHALL HIRE AN INDEPENDENT TESTING LAB TO CONDUCT COMPACTION TESTS. COMPACTION TESTS SHALL BE TAKEN IN ACCORDANCE WITH THE SPECIFICATIONS FOR INSTALLATION OF MISCELLANEOUS IMPROVEMENTS WITHIN STATE HIGHWAYS. COMPACTION TESTS SHALL BE TAKEN ACCORDING TO SECTION 207.1, SPECIAL INSTRUCTIONS OF FIELD COMPACTION TESTING, HOOT TECHNICAL MANUAL ON MATERIAL QUALITY CONTROL, AS FOLLOWS:

A. SUBBASE: ONE (1) COMPACTION TEST PER LIFT, PER 300 LINEAR FEET.
B. BASE COURSE: ONE (1) COMPACTION TEST PER LIFT, PER 200 LINEAR FEET.
C. ONE (1) COMPACTION TEST PER LIFT, PER 500 LINEAR FEET OF TRENCH.

WATER NOTES:

1. ALL WORK SHALL CONFORM TO THE WATER SYSTEM STANDARDS – COUNTY OF HAWAII, DATED 2002, AS AMENDED.
2. THE CONTRACTOR SHALL INFORM THE DEPARTMENT OF WATER SUPPLY (DWS) ENGINEER 72 HOURS PRIOR TO THE BEGINNING OF ANY WATERLINE WORK AND TWO WEEKS PRIOR TO ANY CONNECTION, CHLORINATION, SHUT-OFF OR RELOCATION WORK.
3. THE CONTRACTOR SHALL PAY FOR ALL WORK, EQUIPMENT AND MATERIALS FURNISHED BY THE DWS.
4. ALL EXISTING WATERLINES, WATERLINE APPURTENANCES AND OTHER UTILITY LOCATIONS SHOWN ON THE PLANS ARE OBTAINED FROM LATEST RELIABLE SOURCES. THE CONTRACTOR SHALL BE RESPONSIBLE TO VERIFY THE EXACT LOCATION OF ALL UTILITIES IN THE FIELD AND SHALL BEAR ALL COSTS FOR DAMAGES DONE TO THE WATER SYSTEM..
5. ALL CONNECTIONS TO EXISTING WATERLINES SHALL BE DONE BY THE DWS. CONTRACTOR SHALL PERFORM ALL EXCAVATION, BACKFILL, ROAD REPAIR, TRAFFIC CONTROL, AND PROVIDE EQUIPMENT NECESSARY TO COMPLETE THE CONNECTION.
6. WHERE WATER SHUT-OFF OF MORE THAN 3 HOURS BECOMES NECESSARY, THE CONTRACTOR, AT HIS OWN EXPENSE, SHALL PROVIDE A TEMPORARY BY-PASS LINE. THE DWS ENGINEER SHALL DETERMINE THE BY-PASS LINE SIZE. IF NECESSARY, THE DWS ENGINEER MAY REQUIRE A BY-PASS LINE, REGARDLESS OF THE EXPECTED SHUT-OFF PERIOD.
7. MINIMUM HORIZONTAL CLEARANCE BETWEEN WATERLINE AND OTHER UTILITIES SHALL BE 8 FEET UNLESS OTHERWISE SPECIFIED. MINIMUM VERTICAL CLEARANCE BETWEEN WATERLINES AND OTHER UTILITIES SHALL BE 12" PROVIDED CONCRETE JACKETS ARE USED, AND 18" IF NO CONCRETE JACKETS ARE USED. IN ALL APPLICABLE INSTANCES, THE WATERLINES SHALL BE AT A GRADE HIGHER THAN OTHER UTILITIES.
8. ALL FITTINGS (CLASS 250 MINIMUM) AND ALL GATE VALVES (CLASS 200) SHALL BE DUCTILE IRON, WITH MECHANICAL JOINTS UNLESS OTHERWISE SPECIFIED. BUTTERFLY VALVES SHALL BE CLASS 250 WITH EPOXY-COATED INTERIOR UNLESS OTHERWISE SPECIFIED.
9. THE WATERLINE SHALL BE TESTED AT A MINIMUM OF 225 PSI OR ONE AND A HALF TIMES THE STATIC PRESSURE AT THE LOW POINT, WHICHEVER IS GREATER, UNDER DWS SUPERVISION JUST PRIOR TO PAVING.
10. THE CONTRACTOR SHALL BE RESPONSIBLE FOR THE CHLORINATION OF THE WATER SYSTEM AND SHALL BEAR ALL COSTS. THE PERSON(S) ENGAGED TO DO THE CHLORINATION WORK MUST HAVE THE APPROPRIATE LICENSE TO PERFORM THE WORK IN THE STATE OF HAWAII.
11. EXISTING VALVES, FIRE HYDRANT UNITS, VALVE BOXES, FRAMES AND COVERS DESIGNATED "REMOVE AND SALVAGE" SHALL BE CLEANED OF ALL DIRT, SCABS, AND CONCRETE AND DELIVERED TO THE RESPECTIVE DWS BASEYARD. THIS WORK SHALL BE CONSIDERED INCIDENTAL TO THE VARIOUS BID ITEMS, UNLESS SPECIFIED OTHERWISE.
12. EXISTING WATERLINES, VALVES, FITTINGS AND APPURTENANCES NOT DESIGNATED "REMOVE AND SALVAGE" SHALL BE ABANDONED IN PLACE. ALL EXPOSED VALVE BOXES, VALVES, PIPES, AND APPURTENANCES SHALL BE REMOVED AND DISPOSED OF PROPERLY AT NO COST TO THE DWS.
13. RELOCATION OF EXISTING METERS SHALL BE DONE BY OR UNDER DWS SUPERVISION. RELOCATIONS OF CUSTOMER SERVICE LINES TO RELOCATED METERS SHALL BE COPPER AND DONE BY THE CONTRACTOR. ALL WORK AND MATERIALS REQUIRED SHALL BE PROVIDED BY THE CONTRACTOR AND CONSIDERED INCIDENTAL TO THE RELOCATION WORK. EXISTING METER BOXES DAMAGED BY THE CONTRACTOR SHALL BE REPLACED AT THE CONTRACTOR'S COST. A DIELECTRIC UNION SHALL BE USED TO CONNECT THE COPPER PIPE TO THE CUSTOMER'S G.I. PIPE (IF APPLICABLE).
14. THE DWS WILL NOT ASSUME OWNERSHIP OF NOR GRANT ANY WATER SERVICE UNTIL THE WATER SYSTEM IS DEDICATED TO THE DWS ALONG WITH ALL NECESSARY EASEMENTS AND DOCUMENTS.
15. WHEN COMPACTION TESTS ARE REQUIRED, THE CONTRACTOR SHALL BE RESPONSIBLE TO PROVIDE THE DWS WITH PROCTOR RESULTS OF MATERIALS TO BE USED FOR THAT PORTION OF WORK REQUIRING COMPACTION. THESE RESULTS SHALL BE CERTIFIED AND SHALL BE FURNISHED TO DWS ONE WEEK PRIOR TO COMMENCEMENT OF WORK. COST FOR COMPACTION TESTS SHALL BE INCIDENTAL TO PIPELINE INSTALLATION.
16. ALL NEWLY INSTALLED WATERLINES SHALL HAVE A BLUE, NON METALLIC WARNING TAPE LABELED "CAUTION WATER LINE BURIED BELOW" PLACED DIRECTLY OVER THE COMPACTED CUSHION MATERIAL.
17. CONSTRUCTION PROJECTS REQUIRING TEMPORARY WATER SERVICE SHALL BE METERED AND PAID FOR BY THE CONTRACTOR.
18. THE CONTRACTOR SHALL BE RESPONSIBLE FOR RECORD DRAWINGS (AS-BUILT DRAWINGS) AND THE LICENSED ENGINEER SHALL CERTIFY THE DRAWINGS AS TO ACCURACY AND SUBMIT THE DRAWINGS AND AS-BUILT TRACINGS TO THE DWS.
19. ALL WATERLINES 4-INCH AND LARGER SHALL BE DUCTILE IRON CLASS 52, AND ALL WATERLINES SMALLER THAN 4-INCH SHALL BE SOFT COPPER TYPE K UNLESS OTHERWISE SPECIFIED.
20. LOTS REQUIRING A DWS APPROVED REDUCED PRESSURE PRINCIPAL TYPE BACKFLOW PREVENTION ASSEMBLY SHALL HAVE ONE. IT MUST BE INSTALLED ON PRIVATE PROPERTY IN ACCORDANCE WITH STANDARD DETAIL W9 (ABOVE GROUND) AND DEPARTMENTAL STALL MUST APPROVE THE INSTALLATION BEFORE WATER SERVICE CAN BE STARTED. NO TAPS OR CONNECTIONS ARE ALLOWED BETWEEN THE METER AND THE APPROVED BACKFLOW PREVENTION ASSEMBLY. THE OWNER IS REQUIRED TO TEST THE BACKFLOW PREVENTION ASSEMBLY 1 TIME PER YEAR. THE OWNER SHALL MAKE THEIR OWN PROVISIONS FOR THOSE TIMES WHEN THE BACKFLOW ASSEMBLY IS BEING TESTED.

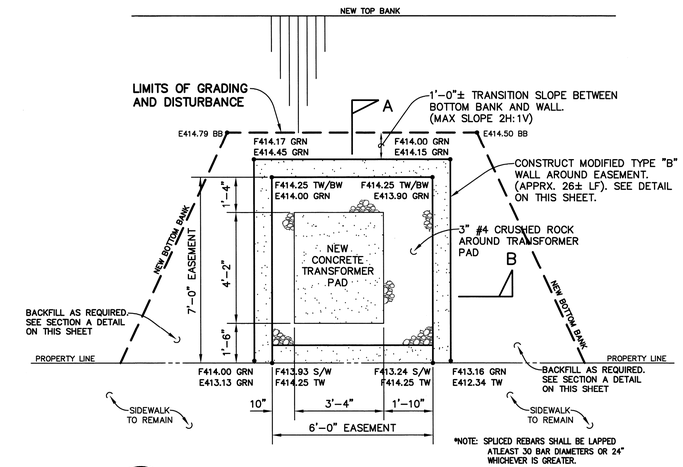

A/2 PLAN – MODIFIED TYPE "B" WALL (LOT 17)
SCALE: 3/8" = 1'-0"

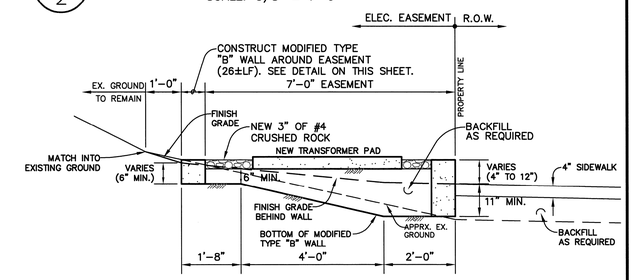

B/2 SECTION A – MODIFIED TYPE "B" WALL
SCALE: 1/2" = 1'-0"

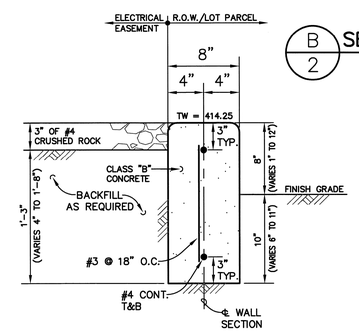

C/2 SECTION B – MODIFIED TYPE "B" WALL
SCALE: 1-1/2" = 1'-0"

REVISION	DATE	DESCRIPTION	MADE BY	APPROVED

ERIC N. S. HEE
LICENSED PROFESSIONAL ENGINEER
No. 5292-C
HAWAII, U.S.A.

THIS WORK WAS PREPARED BY ME OR UNDER MY SUPERVISION AND CONSTRUCTION OF THIS PROJECT WILL BE UNDER MY OBSERVATION. ("OBSERVATION OF CONSTRUCTION" SHALL BE AS DEFINED IN CHAPTER 115, RULES OF THE BOARD OF PROFESSIONAL ENGINEERS, ARCHITECTS AND SURVEYORS, STATE OF HAWAII, SUBCHAPTER 1, SECTION 16-115-2, DEFINITIONS, EFFECTIVE 08/29/94).

Engineers Surveyors Hawaii, Inc.
(Lic. Exp 4-30-2014)

DEPARTMENT OF HAWAIIAN HOME LANDS
LA'I'ŌPUA VILLAGE 4
PHASE 1 – 'ĀKAU
TAX MAP KEY: (3) 7-4-21:10 & POR. 12
KAILUA-KONA, NORTH KONA, HAWAII

GENERAL NOTES AND DETAILS

Approved:

COUNTY ENGINEER, DPW, COUNTY OF HAWAII — DATE

ENGINEERS SURVEYORS HAWAII, INC.
1320 NORTH SCHOOL ST.
HONOLULU, HAWAII 96817

FILE	POCKET	FOLDER	NO.

Initials Y:\2009\59-026 Laiopua Village-4\Working Folder\02 – 59-026 NOTES Sht 2.dwg 1:14pm – Tue, 04/02/13

WASTEWATER COLLECTION SYSTEM NOTES

GENERAL REQUIREMENTS:

1. THE GENERAL REQUIREMENTS AND COVENANTS OF THE DEPARTMENT OF PUBLIC WORKS, COUNTY OF HAWAI'I (JULY 1972): THE STANDARD SPECIFICATIONS FOR PUBLIC WORKS CONSTRUCTION (SEPTEMBER 1986). THE STANDARD DETAILS FOR PUBLIC WORKS CONSTRUCTION, DEPARTMENT OF PUBLIC WORKS, COUNTY OF HAWAI'I, SEPTEMBER 1984 AND THE COUNTY OF HAWAII, DEPARTMENT OF ENVIRONMENTAL MANAGEMENT, WASTEWATER DIVISION (WWD) STANDARD DETAILS (WW-1 THRU WW-9) SHALL BE APPLICABLE AND INCORPORATED HEREIN UNLESS OTHERWISE NOTED.

2. THE CONTRACTOR SHALL PROCURE ALL PERMITS AND LICENSES, PAY ALL CHARGES AND FEES AND GIVE ALL NOTICES NECESSARY AND INCIDENTAL TO THE DULY AND LAWFUL PROSECUTION OF THE WORK.

3. THE CONTRACTOR SHALL FURNISH ALL LABOR, MATERIALS, AND EQUIPMENT REQUIRED FOR THE COMPLETE INSTALLATION OF THE SUBJECT WORK UNLESS SPECIFICALLY WRITTEN OTHERWISE.

4. IT SHALL BE THE CONTRACTOR'S RESPONSIBILITY TO PERFORM ALL CONSTRUCTION PER THE APPROVED PLANS AND SPECIFICATIONS. ANY ADDITIONS, DELETIONS, OR CHANGES TO THE WASTEWATER SYSTEM SHALL MEET THE APPROVAL OF THE COUNTY OF HAWAI'I, DEPARTMENT OF ENVIRONMENTAL MANAGEMENT, WASTEWATER DIVISION.

5. INSPECTIONS SHALL BE REQUIRED FOR ALL WORK WHICH INVOLVES THE WWD'S SEWER MAINS, LATERALS, CLEANOUTS, AND ALL DEDICABLE NEW CONSTRUCTION. CALL THE WASTEWATER DIVISION AT 961-8338 AT LEAST TWO (2) WORKING DAYS IN ADVANCE TO SCHEDULE AN INSPECTION.

   A. WHEN AND AS OFTEN AS THE WWD DETERMINES THROUGH THEIR INSPECTION PROCEDURES, MATERIAL, EQUIPMENT OR WORKMANSHIP DO NOT MEET THE REQUIREMENTS, THE WWD WILL GIVE WRITTEN NOTICE OF THE NONCOMPLIANCE TO THE CONTRACTOR AND IMMEDIATE CORRECTION OF THE DEFICIENCIES SHALL BE ADDRESSED WITH THE WWD ENGINEER AND/OR THEIR REPRESENTATIVE.
   B. INSPECTION SHALL BE PERFORMED PRIOR TO BACKFILLING OR COVERING OF THE PIPE AND AFTER ALL PLUMBING WORK, IN ACCORDANCE WITH THE PLUMBING PERMIT, IS COMPLETE WITHIN THE PARCEL.

6. SEWER WORK SHALL BE SCHEDULED SUCH THAT WORK SHALL NOT BE PERFORMED ON SATURDAYS, SUNDAYS OR COUNTY OF HAWAI'I HOLIDAYS. IF SUCH WORK DICTATES PERFORMANCE ON THESE NON-WORKING DAYS AND AFTER NORMAL HOURS OF OPERATION THEN, THE CONTRACTOR SHALL BE RESPONSIBLE FOR PAYMENT OF OVERTIME CHARGES TO THE WWD.

7. ALL EXISTING WASTEWATER LINE(S), WHETHER OR NOT SHOWN ON THE PLANS, IF DAMAGED DURING CONSTRUCTION, SHALL BE REPAIRED BY THE CONTRACTOR AND THE CONTRACTOR SHALL PAY ALL EXPENSES.

8. BYPASSING OR SPILLING OF SEWAGE TO THE GROUND, DRAINAGE SYSTEM OR STATE WATERS IS PROHIBITED. THE CONTRACTOR SHALL PAY PENALTIES, INCLUDING LEGAL FEES AND OTHER COSTS RELATED TO THE BYPASS AND/OR SPILL.

9. THE CONTRACTOR SHALL BE OR HAVE IN PERSON ON THE JOB SITE OR BE REPRESENTED BY A RESPONSIBLE AGENT WITH AUTHORITY TO ACT FOR THE CONTRACTOR IN CONNECTION WITH THIS PROJECT AT ALL TIMES.

10. AT ALL TIMES DURING THE WORK, KEEP THE PREMISES CLEAN AND ORDERLY, AND UPON COMPLETION OF THE WORK, REPAIR ALL DAMAGE CAUSED BY EQUIPMENT AND LEAVE THE PROJECT FREE OF RUBBISH AND EXCESS MATERIALS OF ANY KIND.

SEWER SYSTEM REQUIREMENTS:

A. SEWER MAIN PIPE AND FITTINGS:

1. ALL SEWER PIPE AND FITTINGS SHALL BE PVC SDR-26 BELL AND SPIGOT OR AN APPROVED EQUAL.
2. LAYING OF PIPE SHALL COMMENCE AT THE LOWEST POINT, THE BELL END FACING UPSTREAM. PIPE SHALL BE FITTED TOGETHER AND MATCHED SO THAT WHEN LAID IT WILL FORM A UNIFORM AND SMOOTH INVERT.
3. THE INTERIOR OF THE SEWER PIPE SHALL BE CLEARED OF ALL DEBRIS AND FOREIGN MATERIALS AS THE WORK PROGRESSES. EXPOSED ENDS OF SEWER PIPE SHALL BE CLOSED WITH TEMPORARY COVERS TO PREVENT EARTH AND DEBRIS FROM ENTERING THE PIPE BEFORE LEAVING THE WORKPLACE FOR THE NIGHT.
4. BECAUSE OF THE NATURE OF PLASTIC PIPE AND FITTINGS, THE CONTRACTOR IS CAUTIONED TO EXERCISE CARE IN HANDLING, LOADING, UNLOADING, AND STORING TO AVOID DAMAGE.

B. TRENCH, PIPE BEDDING, AND BACKFILL:

1. TRENCHES SHALL BE PROPERLY BACKFILLED AND COMPACTED AS SHOWN ON THE APPROVED PLAN.
2. PIPE BEDDING SHALL BE CLASS B 3/4" AGGREGATE BASECOURSE PLACED WITHIN TRENCH NOT TO EXCEED 6 INCHES IN DEPTH, SHOULD PROVIDE UNIFORM AND ADEQUATE LONGITUDINAL SUPPORT UNDER THE PIPE, AND SHALL BE COMPACTED TO 95 PERCENT MAXIMUM DRY DENSITY UNLESS OTHERWISE NOTED ON PLANS.
3. BACKFILL SHALL BE CLASS B 3/4" AGGREGATE BASECOURSE PROPERLY PLACED A MINIMUM OF 12" OVER THE TOP OF THE PIPE TO PROVIDE ADEQUATE SIDE SUPPORT WHILE AVOIDING VERTICAL AND LATERAL DISPLACEMENT.
4. CONTROLLED LOW-STRENGTH MATERIAL (CLSM) SHALL BE USED AS THE FINAL BACKFILL UNLESS OTHERWISE NOTED ON THE PLAN OR APPROVED BY THE WWD ENGINEER.
5. COMPACTION TESTING WHEN USING BASECOURSE SHALL BE ROUTINELY PERFORMED BY AN INDEPENDENT TESTING AND QUALITY CONTROL LABORATORY. TEST RESULTS MAY BE REQUIRED TO BE SUBMITTED TO THE WWD ENGINEER FOR FINAL ACCEPTANCE.

C. SEWER MANHOLES AND APPURTENANCES:

1. PRECAST SEWER MANHOLE BASE, SECTIONS, CONE, FLAT TOP, BENCHES, AND CHANNELS SHALL INCLUDE A CONCRETE WATERPROOFING ADMIXTURE. ADMIXTURE SHALL BE XYPEX ADMIX C-1000 OR APPROVED EQUAL PRODUCT. DOSAGE SHALL BE PER MANUFACTURER'S INSTRUCTION AND SHALL NOT BE LESS THAN 3% OF THE WEIGHT OF THE PORTLAND CEMENT FRACTION OF THE MIX DESIGN.
2. ALL DROP SEWER MANHOLES, TRANSITIONAL SEWER MANHOLE FROM A FORCE MAIN, AND SEWER MANHOLE(S) WITH SEWER MAINS LARGER THAN OR EQUAL TO 12 INCHES SHALL BE CONSTRUCTED USING SEWER MANHOLE AND APPURTENANCES NOTE #C1 AND SHALL BE LINED WITH A PVC LINER, DURA-PLATE OR AN EQUAL PRODUCT.
3. ALL SEWER MANHOLE BENCHES AND CHANNELS SHALL BE COATED USING XYPEX MEGAMIX I OR AN APPROVED EQUAL PRODUCT. SEWER MANHOLE CHANNELS SHALL PROVIDE A SMOOTH TRANSITION BETWEEN INLET AND OUTLET SEWERS AND THE ANGLE BETWEEN THE INLET AND OUTLET SHALL BE A MINIMUM OF 90 DEGREES.
4. ALL MANHOLES FOR SEWER LINES NO LARGER THAN 24-INCH SIZE AND GREATER THAN 5'0" DEEP SHALL BE PROVIDED WITH AN "ECCENTRIC" CONE SECTION AND A TYPE SA FRAME AND COVER. ALL MANHOLES 5'0" DEEP OR LESS SHALL BE PROVIDED WITH A FLAT TOP COVER WITH TYPE SB FRAME AND COVER.
5. ALL MANHOLES WITH SEWER LINES GREATER THAN 24-INCH SHALL BE PROVIDED WITH 48-INCH FRAME AND COVER. THE 48-INCH COVER SHALL HAVE A SMALLER 24-INCH COVER INSTALLED FOR ROUTINE MAINTENANCE AND INSPECTION. COVERS SHALL BE PROVIDED WITH RECESSED STAINLESS STEEL BOLTS TO ALLOW SECURING OF THE COVERS. THE FRAME AND COVER SHALL BE AN ECCENTRIC CONFIGURATION, D&L FOUNDRY & SUPPLY; MODEL #A1428 OR APPROVED EQUAL.

SEWER (CONT.)

6. SEWER PIPE CONNECTIONS TO NEW MANHOLES SHALL BE WITH AN APPROVED CAST-IN-PLACE MANHOLE PIPE ADAPTER (A-LOK, ECONOSEAL, OR APPROVED EQUAL PRODUCT). SEWER PIPE CONNECTIONS TO EXISTING MANHOLES SHALL BE WITH AN APPROVED MANHOLE PIPE ADAPTER (A-LOK FIELD SLEEVE OR APPROVED EQUAL PRODUCT).
7. SEWER MANHOLE RUNGS SHALL BE TYPE "SP" COPOLYMER POLYPROPYLENE PLASTIC, BOWCO INDUSTRIES INC, IN ACCORDANCE WITH WASTEWATER STANDARD DETAIL WW-7. HAND GRAB RUNG SHALL BE TYPE "SA" PER DPW STANDARD DETAIL S-42.
8. SEWER MANHOLES LOCATED IN UNPAVED AREAS SHALL BE PROVIDED A REINFORCED 3000 PSI CLASS "A" CONCRETE COLLAR. THE REINFORCED CONCRETE COLLAR SHALL BE A MINIMUM OF 12" THICK, AND EXTEND A MINIMUM OF 12" BEYOND THE FRAME AND COVER.

D. SEWER LATERAL PIPE AND FITTINGS:

1. NEW SEWER LATERALS AND CLEANOUT SHALL BE 6" DIAMETER, PVC SDR26 PIPE AND FITTINGS.
2. SEWER CLEANOUTS SHALL BE LOCATED IN THE COUNTY RIGHT-OF -WAY WITHIN ONE FOOT OF THE PROPERTY LINE. THE CLEANOUT SHALL BE EASILY ACCESSIBLE (I.E. NOT BE BURIED OR LOCATED UNDER OR CLOSE TO ROCK WALLS, FENCES OR OTHER OBSTRUCTIONS).
3. THE CLEANOUT SHALL BE PROVIDED A BRASS COUNTERSUNK CAP AND AN 18"X18"X18" CLASS B CONCRETE COLLAR REINFORCED WITH 1-#3 REINFORCEMENT STEEL LOOP. REFER TO WWD STANDARD DETAIL WW-2. IN THE EVENT THAT THE CLEANOUT IS INSTALLED WITHIN A SIDEWALK OR SIMILAR AREA HAVING CONCRETE SURFACES, THE CONCRETE COLLAR IS NOT REQUIRED.
4. IF A CLEANOUT IS SUBJECT TO VEHICULAR OR ABNORMAL LOADING IT SHALL BE PROVIDED A TRAFFIC RATED FRAME/COVER (MODEL SBF 1246 W, MANUFACTURED BY SOUTH BAY FOUNDRY OR APPROVED EQUAL) AND SHALL BE INSTALLED AS PER MANUFACTURER'S RECOMMENDATIONS. REFER TO WWD STANDARD DETAIL WW-4.
5. SEWER LATERAL CONNECTIONS TO AN EXISTING SEWER MAIN MAY BE MADE WITH A WYE CONFIGURED FLEXIBLE SADDLE ROTATED 45 DEGREES ABOVE THE SEWER SPRING LINE. SEWER LATERAL SADDLE CONNECTIONS AND CORED SEWER MAIN ENTRY SHALL PROVIDE A SMOOTH AND UNOBSTRUCTED FLOW AREA. THE SEWER SADDLE SHALL COMPLETELY OVERLAY THE CORE ENTRY AREA ON THE MAIN SEWER PIPE. THE SADDLE SHALL BE SECURED TO THE MAIN SEWER PIPE WITH STAINLESS STEEL STRAPS AND JACKETED WITH CLASS B REINFORCED CONCRETE. THE REINFORCED JACKET SHALL COMPLETELY ENCASE THE EXISTING MAIN SEWER PIPE, BE A MINIMUM OF 6" THICK, AND EXTEND A MINIMUM OF 6" BEYOND THE SEWER SADDLE.

E. SEWER LINE ACCEPTANCE TESTS:

1. ALL NEWLY INSTALLED SEWER MAINS AND LATERALS ARE SUBJECT TO LEAKAGE AND CCTV INSPECTION PRIOR TO FINAL ACCEPTANCE AS DIRECTED BY THE WWD.
2. LEAKAGE TESTING SHALL BE ACCOMPLISHED WITH SECTION 21.3 D OF THE STANDARD SPECIFICATIONS FOR PUBLIC WORKS CONSTRUCTION, SEPTEMBER 1986. ALL COSTS FOR TESTING SHALL BE BORNE BY THE CONTRACTOR.
3. AN INITIAL CCTV INSPECTION WILL BE PERFORMED BY THE COUNTY AT NO COST TO THE CONTRACTOR SUBJECT TO THE CONDITIONS BELOW.

   A. THE CONTRACTOR SHALL BE RESPONSIBLE TO OBTAIN, FROM THE WWD, A COPY OF THE SEWER LINE ACCEPTANCE TEST CRITERIA PRIOR TO REQUESTING OR SCHEDULING A CCTV INSPECTION.
   B. THE CONTRACTOR SHALL ASSIST THE COUNTY IN THE PERFORMANCE OF THE CCTV INSPECTION, SHALL BE RESPONSIBLE FOR ALL TRAFFIC CONTROL REQUIREMENTS, AND SHALL BE RESPONSIBLE FOR CLEANING OF THE LINES TO REMOVE ALL DEBRIS PRIOR TO CCTV INSPECTION. IN THE EVENT THAT PIPES ARE FOUND TO HAVE BEEN INADEQUATELY CLEANED, THE COUNTY WILL TERMINATE THE INSPECTION AND ANY SUBSEQUENT INSPECTIONS WILL BE SUBJECT TO CHARGES TO THE CONTRACTOR.
   C. THE CONTRACTOR SHALL HAVE A SUPERVISORY REPRESENTATIVE PRESENT DURING PERFORMANCE OF THE CCTV INSPECTION
   D. IF THE CCTV INSPECTION REVEALS CONDITIONS SUCH AS SAGS, DENTS, OUT-OF-ROUND, ETC. THEN, MANDREL TESTING IN ACCORDANCE WITH SECTION 21.3 E OF THE STANDARD SPECIFICATIONS FOR PUBLIC WORKS CONSTRUCTION, SEPTEMBER 1986 WILL BE REQUIRED AT WHICH THE COST WILL BE BORNE BY THE CONTRACTOR.
   E. CCTV INSPECTIONS WILL BE RECORDED IN VHS OR CDROM FORMAT. IN THE EVENT THAT THE CONTRACTOR REQUESTS A COPY OF THE CCTV INSPECTION, THE CONTRACTOR WILL BE CHARGED FOR THE COPY AT A RATE OF $25.00.

F. FINAL PROJECT SUBMITTALS:

1. UPON FINAL PROJECT ACCEPTANCE SUBMIT TO WWD ONE (1) SET OF "AS-BUILT" PLANS ON VELLUM AND TWO (2) COPIED SETS AND ONE (1) SET OF ELECTRONIC DRAWINGS IN AUTOCAD 2009 VERSION AND (1) SET OF ELECTRONIC DRAWINGS IN ABODE PDF FORMAT.
2. IT IS MANDATORY THAT THE "AS-BUILT" PLANS SHOW CORRECTLY IDENTIFIED PROPERTY TMK NUMBERS, LOCATION OF SEWER MANHOLES, LATERALS, CLEANOUTS AND ALL OTHER MAJOR COMPONENTS OF THE WASTEWATER COLLECTION SYSTEM INCLUDING INVERT ELEVATIONS AT ALL SEWER MANHOLES, LATERAL CONNECTIONS AT THE MAIN, LATERAL ELEVATIONS AT THE CLEANOUT. SUBMITTED DOCUMENTATION SHALL BE CERTIFIED BY A LICENSED PROFESSIONAL LAND SURVEYOR ATTESTING TO THE LOCATION AND ELEVATIONS OF ALL MAJOR COMPONENTS OF THE WASTEWATER COLLECTION SYSTEM AS SHOWN ON THE AS-BUILT PLANS.

SOLID WASTE CONSTRUCTION NOTES:

1. UNLESS OTHERWISE SPECIFIED, THE CONTRACTOR IS RESPONSIBLE FOR THE PROPER HANDLING, STORAGE AND/OR DISPOSAL OF ALL WASTE GENERATED BY THIS CONSTRUCTION, INCLUDING GRUBBING AND EXCESS EXCAVATED MATERIAL. ANY MATERIAL BROUGHT TO THE COUNTY LANDFILLS WILL BE SUBJECTED TO THE INSTITUTED TIPPING FEE SYSTEM, WITH NO EXCEPTIONS OR EXEMPTIONS.

2. ALL WASTES GENERATED BY CONSTRUCTION, INCLUDING GRUBBING, DEMOLITION AND EXCESS EXCAVATION MATERIAL MAY BE BROUGHT TO THE WEST HAWAII OR THE HILO LANDFILL. THE CONTRACTOR SHALL CHECK WITH THE SOLID WASTE DIVISION FOR DISCLOSURE OF THE CURRENT LANDFILL FEE AND CONSIDERATION OF THAT FEE SHALL BE INCLUDED IN THE CONTRACTOR'S BID SUM.

3. CONSTRUCTION, DEMOLITION AND GRUBBING MATERIAL SHALL NOT BE DEPOSITED AT ANY OF THE COUNTY TRANSFER STATIONS, BUT SHALL BE TRANSPORTED FOR DISPOSAL TO EITHER THE WEST HAWAII OR HILO LANDFILL.

4. ASBESTOS MATERIAL MUST BE SEPARATED, DOUBLE BAGGED AND LANDFILLED IN ACCORDANCE WITH REGULATIONS OF THE SOLID WASTE DIVISION, DEPARTMENT OF ENVIRONMENTAL MANAGEMENT. INFORMATION MAY BE OBTAINED BY CALLING THE DIVISION AT (808) 961-8339 BETWEEN 7:00 A.M. AND 4:00 P.M. MONDAY THROUGH FRIDAY.

CONCRETE NOTES:

1. DESIGN AND CONSTRUCTION SHALL CONFORM TO THE LATEST BUILDING CODE REQUIREMENTS FOR REINFORCED CONCRETE OF THE AMERICAN CONCRETE INSTITUTE.
2. ALL CONCRETE SHALL DEVELOP A MINIMUM COMPRESSIVE STRENGTH OF 3000 PSI AT THE AGE OF 28 DAYS UNLESS NOTED OTHERWISE.
3. ALL REINFORCING SHALL BE ASTM A-615 GRADE 60.
4. ARRANGEMENT AND DETAILS OF REINFORCING STEEL, INCLUDING BAR SUPPORTS AND SPLICES, SHALL BE IN ACCORDANCE WITH THE LATEST ACI 315 DETAIL MANUAL.
5. ALL SLAB REINFORCING SHALL HAVE A MINIMUM EXTENSION INTO THE SUPPORT IN ACCORDANCE WITH THE LATEST ACI CODE. IF SUCH EXTENSION IS NOT POSSIBLE, BARS SHOULD TERMINATE IN STANDARD HOOKS.
6. ALL REINFORCING SHALL LAP A MINIMUM OF 1.76 Ld AT SPLICES UNLESS OTHERWISE SHOWN. FOR TOP BARS INCREASE LAP BY A FACTOR OF 1.4.

BAR SIZE	TENSION DEVELOPMENT LENGTH
#3	12-INCHES
#4	12-INCHES
#5	15-INCHES
#6	19-INCHES
#7	26-INCHES
#8	35-INCHES

7. WHEREVER IT IS NECESSARY TO SPLICE REINFORCEMENT OTHERWISE THAN IS SHOWN ON THE CONTRACT DRAWINGS, THE CHARACTER OF THE SPLICE SHALL BE AS SPECIFIED BY THE ENGINEER. SPLICING SHALL BE STAGGERED.
8. HOOK BARS AT OPENINGS.
9. ALL EXPOSED EDGES AND CORNERS OF CONCRETE SHALL BE CHAMFERED 3/4-INCH UNLESS OTHERWISE NOTED.
10. UNLESS OTHERWISE SHOWN, THE MINIMUM COVER FOR REINFORCING STEEL SHALL BE AS FOLLOWS:

CONCRETE CAST AGAINST THE EARTH	3 INCHES
CONCRETE EXPOSED TO EARTH OR WEATHER	2-1/2 INCHES
CONCRETE EXPOSED TO INTERIOR TANK ATMOSPHERE	2 INCHES
ALL OTHER EXPOSURES	1-1/2 INCHES

11. ALL REINFORCING MARKED CONTINUOUS (CONT.) ON THE PLANS SHALL BE LAPPED AS REQUIRED, UNDER NOTE NO. 6, AT ALL SPLICES, LAPS, CORNERS AND INTERSECTIONS.

GRADING NOTES:

1. ALL GRADING WORK SHALL CONFORM TO CHAPTER 10 OF THE HAWAII COUNTY CODE. SHOULD A GRADING PERMIT BE REQUIRED, NO WORK SHALL COMMENCE UNTIL THE DEPARTMENT OF PUBLIC WORKS APPROVES A GRADING PERMIT.
2. ALL GRADING FOR THE LAIOPUA VILLAGE 4 SHALL BE IN CONFORMANCE WITH THE SUBSURFACE INVESTIGATION REPORT, "LAIOPUA VILLAGE 4 AKAU AND HEMA SUBDIVISIONS" DATED MARCH 22, 2012, BY FEWELL GEOTECHNICAL ENGINEERING, LTD. WHERE APPLICABLE.
3. THE CONTRACTOR SHALL REMOVE ALL SILT AND DEBRIS DEPOSITED IN DRAINAGE FACILITIES, ROADWAYS AND OTHER AREAS RESULTING FROM HIS WORK. THE COST INCURRED FOR ANY NECESSARY REMEDIAL ACTION BY THE DPW SHALL BE PAYABLE BY THE CONTRACTOR.
4. THE CONTRACTOR AT HIS OWN EXPENSIVE, SHALL KEEP THE PROJECT AND SURROUNDING AREAS FREE FROM DUST NUISANCES. THE WORK SHALL BE IN CONFORMANCE WITH THE AIR POLLUTION CONTROL RULES OF THE STATE DEPARTMENT OF HEALTH, HAR 11-60.1, FUGITIVE DUST.
5. ALL GRADING OPERATIONS SHALL BE PERFORMED IN CONFORMANCE WITH THE APPLICABLE PROVISIONS OF THE HAWAII ADMINISTRATIVE RULES, TITLE 11, CHAPTER 55, WATER POLLUTION CONTROL AND CHAPTER 54, WATER QUALITY STANDARDS, AND TO THE EROSION AND SEDIMENTATION CONTROL STANDARDS AND GUIDELINES OF THE DEPARTMENT OF PUBLIC WORKS, COUNTY OF HAWAII..
6. THE CONTRACTOR SHALL SOD OR PLANT ALL SLOPES AND EXPOSED AREAS IMMEDIATELY AFTER THE GRADING WORK HAS BEEN COMPLETED.
7. FILLS ON SLOPES STEELPER THAN 5:1 SHALL BE KEYED..
8. THE CONTRACTOR SHALL INFORM THE DPW OF THE LOCATION OF THE DISPOSAL AND/OR BORROW SITES(S) REQUIRED FOR THIS PROJECT WHEN AN APPLICATION FOR A GRADING PERMIT IS MADE. THE DISPOSAL AND/OR BORROW SITE(S) MUST ALSO FULFILL THE REQUIREMENTS OF THE GRADING ORDINANCE..
9. NO GRADING WORK SHALL BE DONE ON SATURDAYS, SUNDAYS AND HOLIDAYS ANYTIME WITHOUT PRIOR APPROVAL FROM THE DEPARTMENT OF PUBLIC WORKS. GRADING WORK ON NORMAL DAYS SHALL BE BETWEEN THE HOURS OF 8:30 A.M. TO 3:30 P.M.
10. FILLS SHALL BE COMPACTED TO 90 PERCENT (90%) OF MAXIMUM DENSITY PER ASTM D-1557 TEST. FILLS PLACED WITHIN THE UPPER 2 FEET OF FINISHED SUBGRADES WITHIN THE STREET RIGHT OF WAYS SHALL BE COMPACTED TO A MINIMUM OF 95% RELATIVE COMPACTION.
11. THE CONTRACTOR SHALL REMOVE ALL VEGETATION BEFORE THE PLACING OF FILLS ON A NATURAL GROUND SURFACE.
12. THE CONTRACTOR SHALL PROVIDE ADEQUATE MEASURES TO PREVENT FLOODING AND EROSION PROBLEMS TO ADJACENT PROPERTIES.
13. SHOULD ANY UNANTICIPATED ARCHAEOLOGICAL SITE(S) BE UNCOVERED BY THE GRADING/GRUBBING ACTIVITY, ALL WORK SHALL CEASE IN THE IMMEDIATE AREA AND THE CONTRACTOR SHALL NOTIFY THE STATE HISTORIC PRESERVATION OFFICE AT 933-4346. NO WORK SHALL RESUME UNTIL THE OWNER/CONTRACTOR OBTAINS CLEARANCE FROM THE HISTORIC PRESERVATION OFFICE.
14. ALL GRADING, GRUBBING, AND/OR STOCKPILING ACTIVITIES SHALL CONFORM WITH THE AIR POLLUTION CONTROL RULES OF THE STATE DEPARTMENT OF HEALTH, HAR 11-60.1, FUGITIVE DUST.
15. CONTRACTOR SHALL COMPLY WITH CHAPTER 11-55, WATER POLLUTION CONTROL, HAWAII ADMINISTRATION RULES, DEPT. OF HEALTH, WHICH REQUIRES AN NPDES PERMIT FOR CERTAIN CONSTRUCTION ACTIVITY.
16. ALL GRADING OPERATIONS SHALL BE PERFORMED IN CONFORMANCE WITH THE APPLICABLE PROVISIONS OF THE HAWAII ADMINISTRATIVE RULES, TITLE 11, CHAPTER 46, COMMUNITY NOISE CONTROL.

ARCHAEOLOGICAL NOTES:

1. IN THE EVENT THAT AN ARCHAEOLOGICAL OR HISTORICAL STRUCTURE WITHIN THE WORK AREA IS INADVERTENTLY DAMAGED DURING CONSTRUCTION, CEASE WORK IN THE VICINITY OF THE SITE AND NOTIFY THE DEPARTMENT OF HAWAIIAN HOME LANDS AND THE STATE HISTORIC PRESERVATION DIVISION (SHPD) OF THE DEPARTMENT OF LAND AND NATURAL RESOURCES OF THE DAMAGE. SHPD WILL DETERMINE THE APPROPRIATE MITIGATION MEASURES.
2. IN THE EVENT THAT A PREVIOUSLY UNKNOWN ARCHAEOLOGICAL FEATURE IS EXPOSED BY CONSTRUCTION, CEASE WORK IN THE VICINITY OF THE NEW FEATURE AND NOTIFY THE DEPARTMENT OF HAWAIIAN HOME LANDS, THE SHPD, AND THE HAWAII COUNTY PLANNING DEPARTMENT OF THE NEW DISCOVERY.
3. IN THE EVENT THAT PREVIOUSLY UNKNOWN HUMAN REMAINS ARE EXPOSED BY CONSTRUCTION, CEASE ALL WORK IN THE AREA OF THE REMAINS, AND PROTECT THE AREA WITH AN APPROPRIATE MATERIAL. NOTIFY THE DEPARTMENT OF HAWAIIAN HOME LANDS AND THE SHPD.

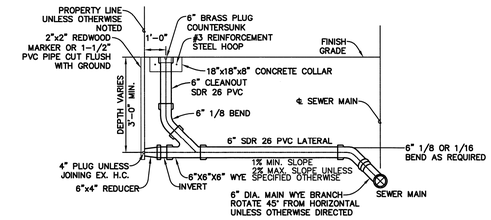

NOTES:
1. SEE CONSTRUCTION PLANS FOR ℄ STATION AND INVERT.
2. THE UPPER END OF THE HOUSE CONNECTION SHALL TERMINATE WITH A 6"x4" REDUCER UNLESS OTHERWISE NOTED ON THE CONSTRUCTION PLAN.
3. HOUSE CONNECTION SHALL BE LAID ON STRAIGHT LINE AND GRADE UNLESS OTHERWISE SPECIFIED.

A/3 CLEANOUT DETAIL
NOT TO SCALE

REVISION	DATE	DESCRIPTION	MADE BY	APPROVED

ERIC N. S. HEE
LICENSED PROFESSIONAL ENGINEER
No. 5292-C
HAWAII, U.S.A.

THIS WORK WAS PREPARED BY ME OR UNDER MY SUPERVISION AND CONSTRUCTION OF THIS PROJECT WILL BE UNDER MY OBSERVATION. ("OBSERVATION OF CONSTRUCTION" SHALL BE AS DEFINED IN CHAPTER 115, RULES OF THE BOARD OF PROFESSIONAL ENGINEERS, ARCHITECTS AND SURVEYORS, STATE OF HAWAII, SUBCHAPTER 1, SECTION 16-115-2, DEFINITIONS, EFFECTIVE 08/29/94).

Eric N. S. Hee
Engineers Surveyors Hawaii, Inc.
(Lic. Exp 4-30-2014)

DEPARTMENT OF HAWAIIAN HOME LANDS
LA'I'OPUA VILLAGE 4
PHASE 1 - 'AKAU
TAX MAP KEY: (3) 7-4-21:10 & POR. 12
KAILUA-KONA, NORTH KONA, HAWAII

GENERAL NOTES AND DETAILS

Approved:

COUNTY ENGINEER, DPW, COUNTY OF HAWAII DATE

ENGINEERS SURVEYORS HAWAII, INC.
1320 NORTH SCHOOL ST.
HONOLULU, HAWAII 96817

FILE	POCKET	FOLDER	NO.

Initials Y:\2009\59-026 Laiopua Village-4\Working Folder\03 - 59-026 NOTES Sht 3.dwg 1:13pm - Tue, 04/02/13

GENERAL SITE PLAN

SCALE: 1" = 80'

WATER LATERAL NOTES:

1. LOT 108, MINI-UHIUHI PRESERVE, WILL NOT HAVE A WATER LATERAL INSTALLED (NO WATER UNIT)

SEWER LATERAL NOTES:

1. TWO LOTS WILL NOT HAVE A SEWER LATERAL INSTALLED AS FOLLOWS:

   LOT 108, MINI-UHIUHI PRESERVE;
   LOT 120, POST OFFICE CLUSTER BOX UNITS LOT;

2. SHOULD A LATERAL BE RQUIRED IN THE FUTURE, INSTALLATION OF LATERALS TO SERVICE THE LOT WILL BE AT THE OWNER'S EXPENSE IN ACCORDANCE WITH SECTION 21-20 OF THE HAWAII COUNTY CODE.

REVISION	DATE	DESCRIPTION	MADE BY	APPROVED

ERIC N. S. HEE
LICENSED PROFESSIONAL ENGINEER
No. 5292-C
HAWAII, U.S.A.

THIS WORK WAS PREPARED BY ME OR UNDER MY SUPERVISION AND CONSTRUCTION OF THIS PROJECT WILL BE UNDER MY OBSERVATION. ("OBSERVATION OF CONSTRUCTION" SHALL BE AS DEFINED IN CHAPTER 115, RULES OF THE BOARD OF PROFESSIONAL ENGINEERS, ARCHITECTS AND SURVEYORS, STATE OF HAWAII, SUBCHAPTER 1, SECTION 16-115-2, DEFINITIONS, EFFECTIVE 08/29/94).

Engineers Surveyors Hawaii, Inc.
(Lic. Exp 4-30-2014)

DEPARTMENT OF HAWAIIAN HOME LANDS
LA'I'ŌPUA VILLAGE 4
PHASE 1 – 'ĀKAU
TAX MAP KEY: (3) 7-4-21:10 & POR. 12
KAILUA-KONA, NORTH KONA, HAWAII

GENERAL SITE PLAN

Approved:

COUNTY ENGINEER, DPW, COUNTY OF HAWAII — DATE

ENGINEERS SURVEYORS HAWAII, INC.
1320 NORTH SCHOOL ST.
HONOLULU, HAWAII 96817

FILE	POCKET	FOLDER	NO.

Initials Y:\2009\59-026 Laiopua Village-4\Working Folder\04 - 59-026 General Site Plan Sht 4.dwg 1:28pm - Fri, 04/12/13

LEGEND:

- DRAINAGE FLOW DIRECTION
- SWALE
- ELECTRICAL TRANSFORMER EASEMENT

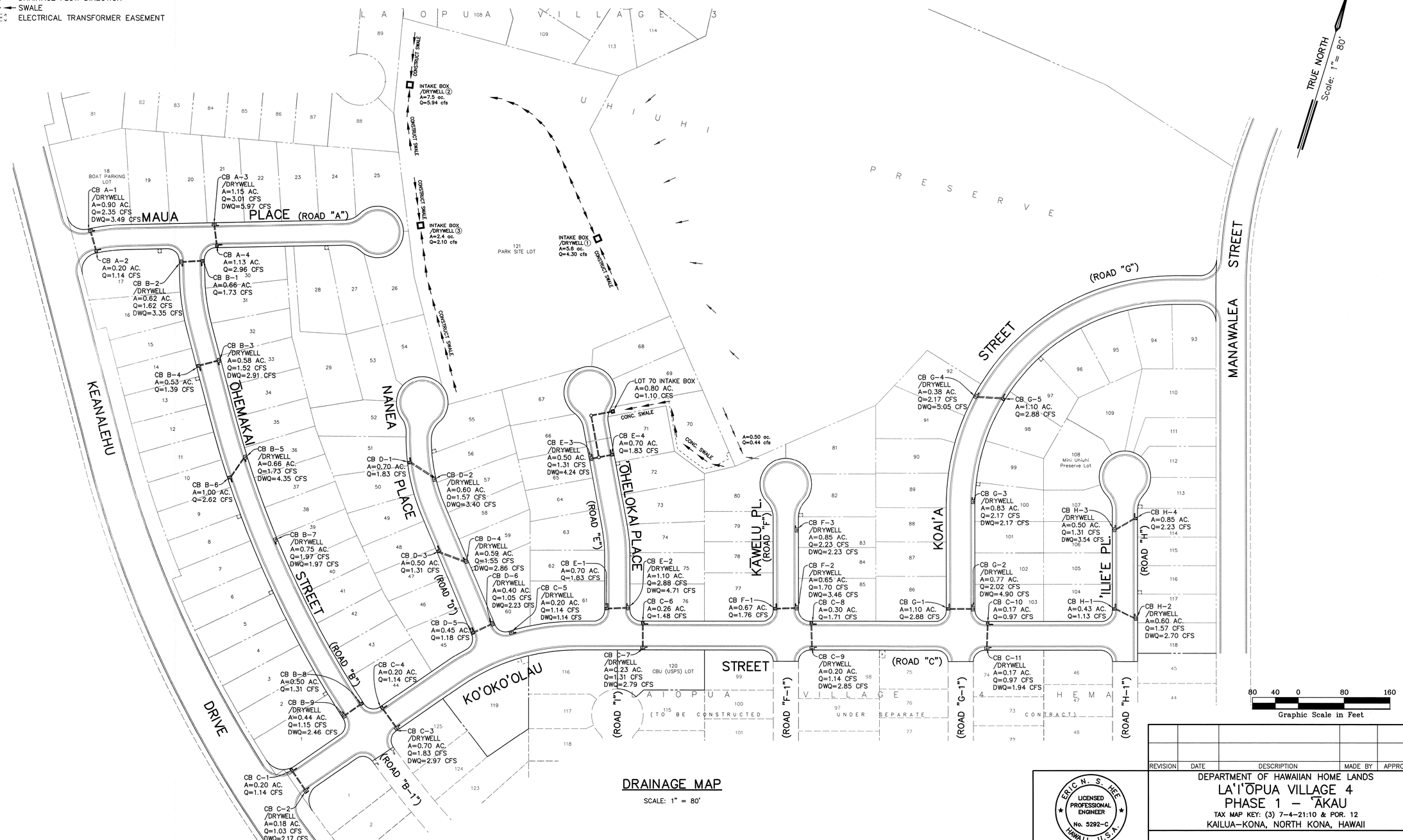

DRAINAGE MAP

SCALE: 1" = 80'

REVISION	DATE	DESCRIPTION	MADE BY	APPROVED

ERIC N. S. HEE
LICENSED PROFESSIONAL ENGINEER
No. 5292-C
HAWAII, U.S.A.

THIS WORK WAS PREPARED BY ME OR UNDER MY SUPERVISION AND CONSTRUCTION OF THIS PROJECT WILL BE UNDER MY OBSERVATION. ("OBSERVATION OF CONSTRUCTION" SHALL BE AS DEFINED IN CHAPTER 115, RULES OF THE BOARD OF PROFESSIONAL ENGINEERS, ARCHITECTS AND SURVEYORS, STATE OF HAWAII, SUBCHAPTER 1, SECTION 16-115-2, DEFINITIONS, EFFECTIVE 08/29/94).

Eric N. S. Hee
Engineers Surveyors Hawaii, Inc.
(Lic. Exp 4-30-2014)

DEPARTMENT OF HAWAIIAN HOME LANDS

LA'I'ŌPUA VILLAGE 4
PHASE 1 – 'ĀKAU

TAX MAP KEY: (3) 7-4-21:10 & POR. 12

KAILUA-KONA, NORTH KONA, HAWAII

DRAINAGE DESIGN DATA

Approved:

COUNTY ENGINEER, DPW, COUNTY OF HAWAII DATE

ENGINEERS SURVEYORS HAWAII, INC.
1320 NORTH SCHOOL ST.
HONOLULU, HAWAII 96817

FILE	POCKET	FOLDER	NO.

Initials Z:\Engineering\Projects\2009\59-026 Laiopua Village-4\Working Folder\05 – 59-026 Drainage Map Sht 5.dwg 11:08am – Fri, 03/29/13

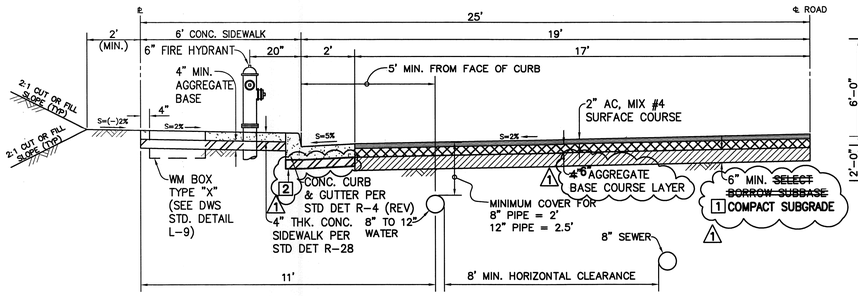

TYPICAL 50-FOOT WIDE ROADWAY (HALF SECTION)

SCALE: 3/8" = 1'-0"

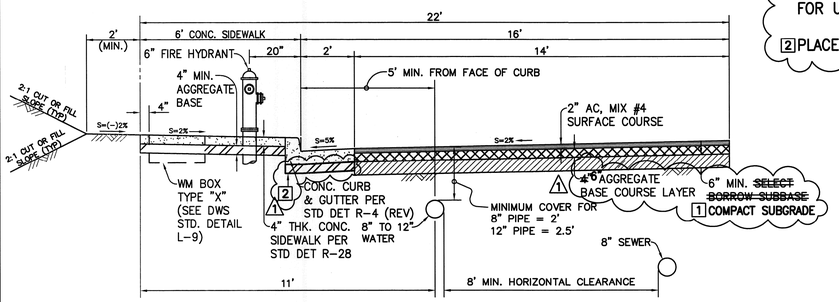

TYPICAL 44-FOOT WIDE ROADWAY (HALF SECTION)

SCALE: 3/8" = 1'-0"

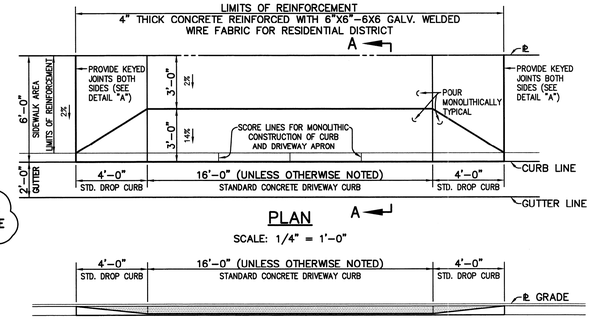

PLAN

SCALE: 1/4" = 1'-0"

ELEVATION

SCALE: 1/4" = 1'-0"

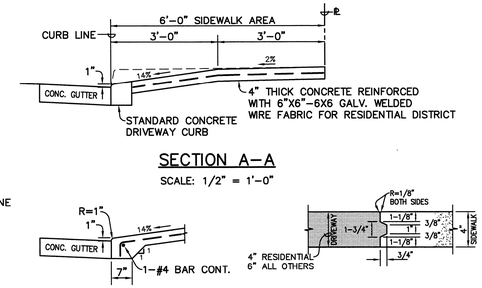

SECTION A-A

SCALE: 1/2" = 1'-0"

ALTERNATE DETAIL

SCALE: 1/2" = 1'-0"

DETAIL "A"

SCALE: 1-1/2" = 1'-0"

KEYNOTE

1 WHERE EXISTING SUBGRADE IS UNSUITABLE (AS DETERMINED BY DHHL'S GEOTECHNICAL ENGINEER), OVEREXCAVATE 6 INCHES AND REPLACE SUBGRADE AS DIRECTED BY THE ENGINEER. TO BE PAID FOR UNDER ITEM "DHHL FIELD DIRECTED CHANGES."

2 PLACE 4" AGGREGATE BASE COURSE UNDER CURB AND GUTTER. COMPACT SUBGRADE, TYPICAL.

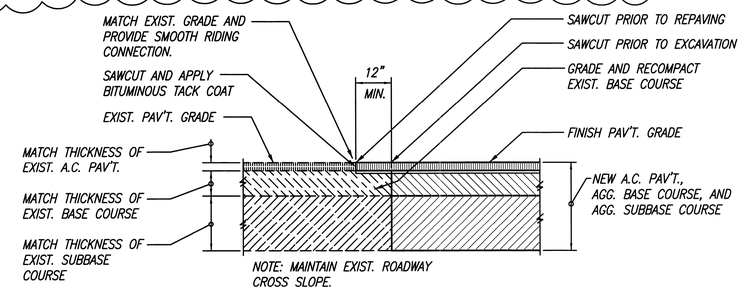

SAWCUT & CONNECTION TO EXIST. PAVEMENT

NOT TO SCALE

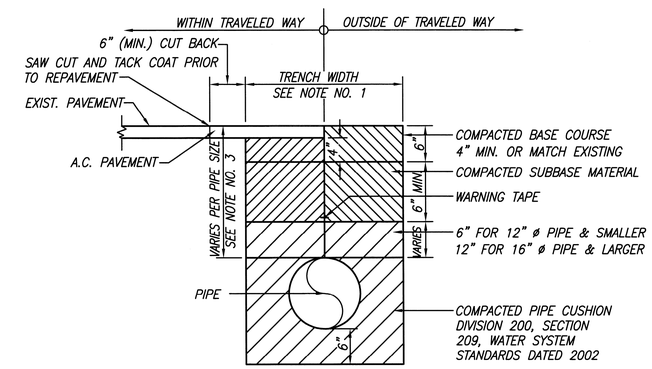

NOTES:

1. SEE TABLE 300-1, PAGE 302-3, WATER SYSTEM STANDARDS DATED 2002
2. LOCAL MATERIAL MAY BE USED OUTSIDE SHOULDER AREA
3. SEE TABLE 100-3, PAGE 102-4, WATER SYSTEM STANDARDS DATED 2002

TYPICAL TRENCH & PAVEMENT REPAIR SECTION

SCALE: 1" = 1'-0"

NOTE:

1. DETECTABLE WARNINGS SHALL COMPLY WITH THE 2004 AMERICANS WITH DISABILITIES ACT ACCESSIBILITY GUIDELINES (2004 ADAAG) BELOW:

*ADAAG 705.1 GENERAL. DETECTABLE WARNINGS SHALL CONSIST OF A SURFACE OF TRUNCATED DOMES AND SHALL COMPLY WITH 705.
*ADAAG 705.1.1 DOME SIZE. TRUNCATED DOMES IN A DETECTABLE WARNING SURFACE SHALL HAVE A BASE DIAMETER OF 0.9 INCHES MINIMUM AND 1.4 INCHES MAXIMUM, A TOP DIAMETER OF 50% OF THE BASE DIAMETER MINIMUM TO 65% OF THE BASE DIAMETER MAXIMUM, AND A HEIGHT OF 0.2 INCHES.
*ADAAG 705.1.2 DOME SPACING. TRUNCATED DOMES IN A DETECTABLE WARNING SURFACE SHALL HAVE A CENTER-TO-CENTER SPACING OF 1.6 INCHES MINIMUM AND 2.4 INCHES MAXIMUM, AND A BASE-TO-BASE SPACING OF 0.65 INCHES MINIMUM, MEASURED BETWEEN THE MOST ADJACENT DOMES ON A SQUARE GRID.
*ADAAG 705.1.3 CONTRAST. DETECTABLE WARNING SURFACES SHALL CONTRAST VISUALLY WITH ADJACENT WALKING SURFACES EITHER LIGHT-ON-DARK, OR DARK-ON-LIGHT.

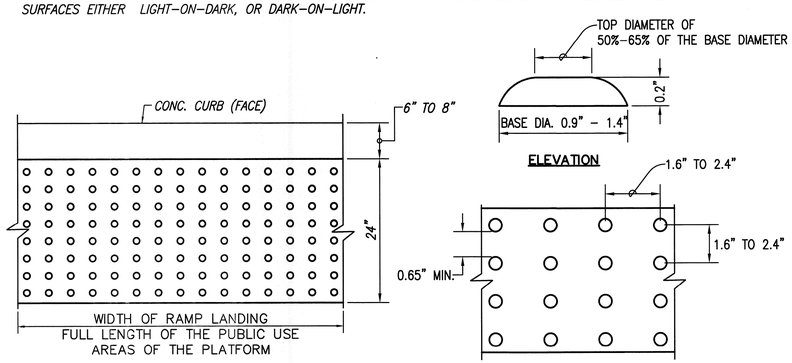

DETECTABLE WARNING DETAIL

NOT TO SCALE

NOTES:

FOR CURB RAMP DETAIL SEE SHEETS 14 AND 15.

DUE TO THE STEEP TERRAIN IN THIS SUBDIVISION, ROAD GRADIENTS ARE BETWEEN 3% TO 12%. THEREFORE THE MAJORITY OF THE CURB RAMPS CANNOT MEET THE MINIMUM ADA REQUIREMENTS FOR CURB RAMPS.

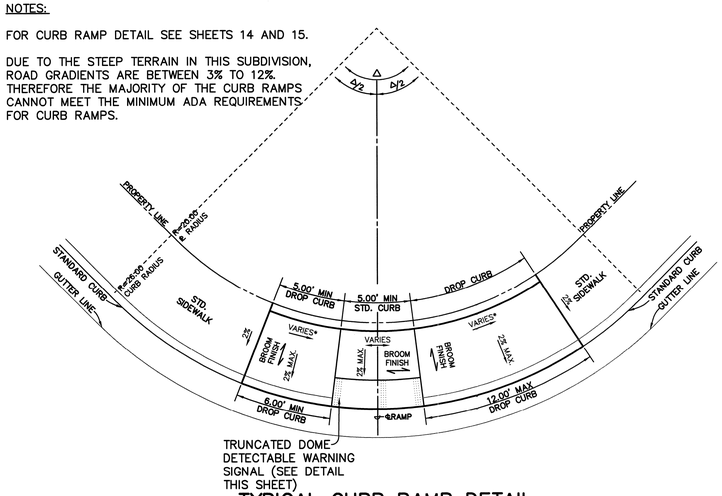

TYPICAL CURB RAMP DETAIL

SCALE: 1" = 5'

REVISION	DATE	DESCRIPTION	MADE BY	APPROVED
1	5/24/13	ADDENDUM NO. 1: REVISED TYPICAL SECTION	ESH, INC.	

ERIC N. S. HEE — LICENSED PROFESSIONAL ENGINEER No. 5292-C — HAWAII, U.S.A.

THIS WORK WAS PREPARED BY ME OR UNDER MY SUPERVISION AND CONSTRUCTION OF THIS PROJECT WILL BE UNDER MY OBSERVATION. ("OBSERVATION OF CONSTRUCTION" SHALL BE AS DEFINED IN CHAPTER 115, RULES OF THE BOARD OF PROFESSIONAL ENGINEERS, ARCHITECTS AND SURVEYORS, STATE OF HAWAII, SUBCHAPTER 1, SECTION 16-115-2, DEFINITIONS, EFFECTIVE 08/29/94).

Engineers Surveyors Hawaii, Inc. (Lic. Exp 4-30-2014)

DEPARTMENT OF HAWAIIAN HOME LANDS

LA'I'ŌPUA VILLAGE 4
PHASE 1 – 'ĀKAU

TAX MAP KEY: (3) 7-4-21:10 & POR. 12
KAILUA-KONA, NORTH KONA, HAWAII

TYPICAL ROAD SECTIONS AND MISCELLANEOUS DETAILS

Approved:

COUNTY ENGINEER, DPW, COUNTY OF HAWAII — DATE

ENGINEERS SURVEYORS HAWAII, INC.
1320 NORTH SCHOOL ST.
HONOLULU, HAWAII 96817

FILE	POCKET	FOLDER	NO.

Initials Y:\2009\59-026 Laiopua Village-4\Working Folder\06 - 59-026 (Addendum-1) Typ Road Sections and Details.dwg 10:40am - Tue, 05/21/13

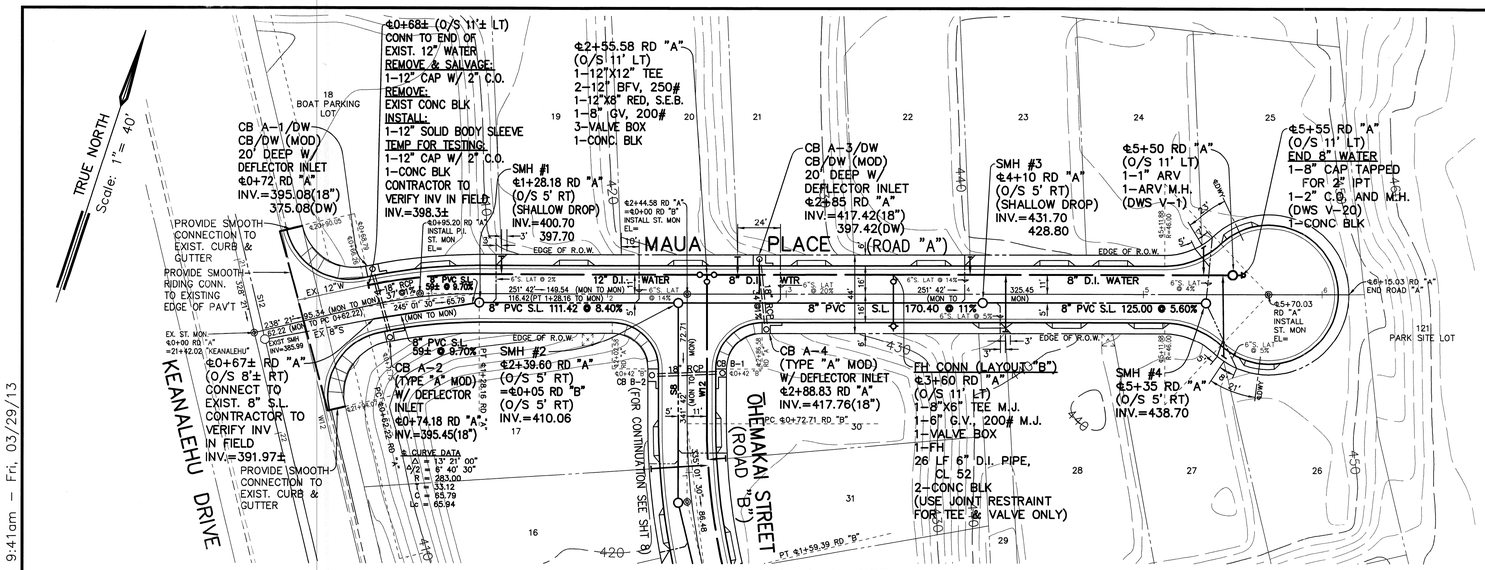

PLAN – MAUA PLACE
(ROAD "A" – 44-FT WIDE)

SCALE: 1" = 40'

NOTES: FOR INTERSECTION CURB RETURN DATA AND RAMP DETAIL SEE SHEET 21.
FOR MODIFIED CB/DRYWELL (CB/DW) AND MODIFIED TYPE "A" CB DETAIL SEE SHTS S-2 AND S-3

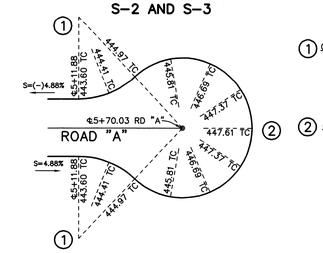

CUL-DE-SAC CURB RETURN

SCALE: 1" = 40'

DRIVEWAY LOCATION SCHEDULE		
LOT	℄STA	DRIVEWAY LENGTH
18	1+05	16 FEET
19	1+81	16 FEET
20	2+45	16 FEET
21	3+14	16 FEET
22	3+81	16 FEET
23	4+50	16 FEET
24	4+83	16 FEET
25	PER PLAN	16 FEET
26	PER PLAN	16 FEET
27	4+97	16 FEET
28	4+62	16 FEET
29	4+15	16 FEET
30	NO DWY ON ROAD "A"	
17	NO DWY ON ROAD "A"	

LEGEND:

- 1" TYPE "A" WATER LATERAL FOR 5/8" METER
- 1-1/2" TYPE "C" WATER LATERAL FOR 5/8" METERS
- 6" SEWER LATERAL (DOUBLE)
- 6" SEWER LATERAL (SINGLE)
- DES ELECTRICAL TRANSFORMER EASEMENT

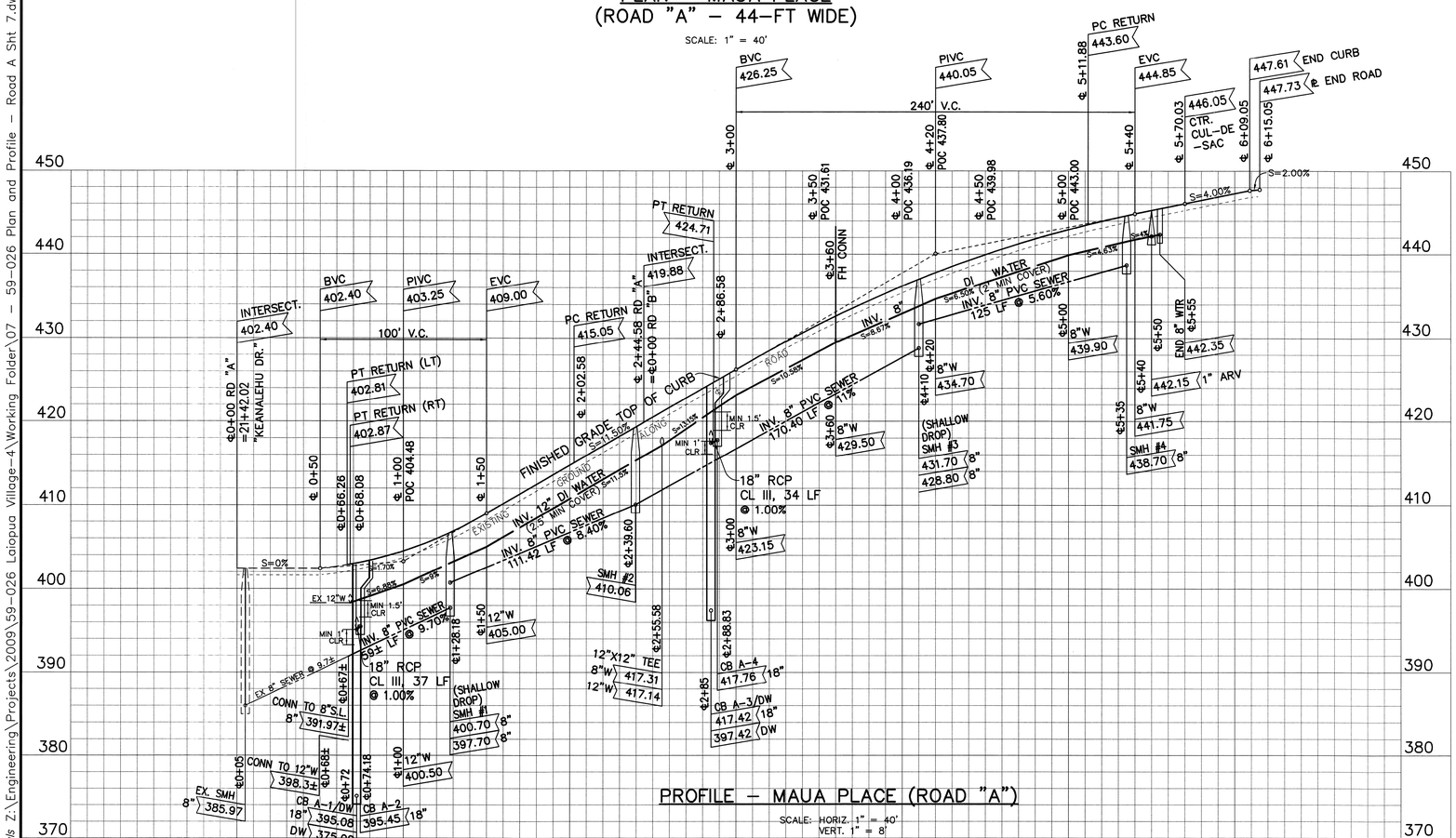

PROFILE – MAUA PLACE (ROAD "A")

SCALE: HORIZ. 1" = 40'
VERT. 1" = 8'

40 20 0 40 80
Graphic Scale in Feet

PROPOSED PUBLIC ROAD

REVISION	DATE	DESCRIPTION	MADE BY	APPROVED

ERIC N. S. HEE
LICENSED PROFESSIONAL ENGINEER
No. 5292-C
HAWAII, U.S.A.

THIS WORK WAS PREPARED BY ME OR UNDER MY SUPERVISION AND CONSTRUCTION OF THIS PROJECT WILL BE UNDER MY OBSERVATION. ("OBSERVATION OF CONSTRUCTION" SHALL BE AS DEFINED IN CHAPTER 115, RULES OF THE BOARD OF PROFESSIONAL ENGINEERS, ARCHITECTS AND SURVEYORS, STATE OF HAWAII, SUBCHAPTER 1, SECTION 16-115-2, DEFINITIONS, EFFECTIVE 08/29/94).

Engineers Surveyors Hawaii, Inc.
(Lic. Exp 4-30-2014)

DEPARTMENT OF HAWAIIAN HOME LANDS
LA'I'ŌPUA VILLAGE 4
PHASE 1 – 'ĀKAU
TAX MAP KEY: (3) 7-4-21:10 & POR. 12
KAILUA-KONA, NORTH KONA, HAWAII

PLAN AND PROFILE – (ROAD "A")
MAUA PLACE

Approved:

COUNTY ENGINEER, DPW, COUNTY OF HAWAII DATE

ENGINEERS SURVEYORS HAWAII, INC.
1320 NORTH SCHOOL ST.
HONOLULU, HAWAII 96817

FILE	POCKET	FOLDER	NO.

Initials Z:\Engineering\Projects\2009\59-026 Laiopua Village-4\Working Folder\07 – 59-026 Plan and Profile – Road A Sht 7.dwg 9:41am – Fri, 03/29/13

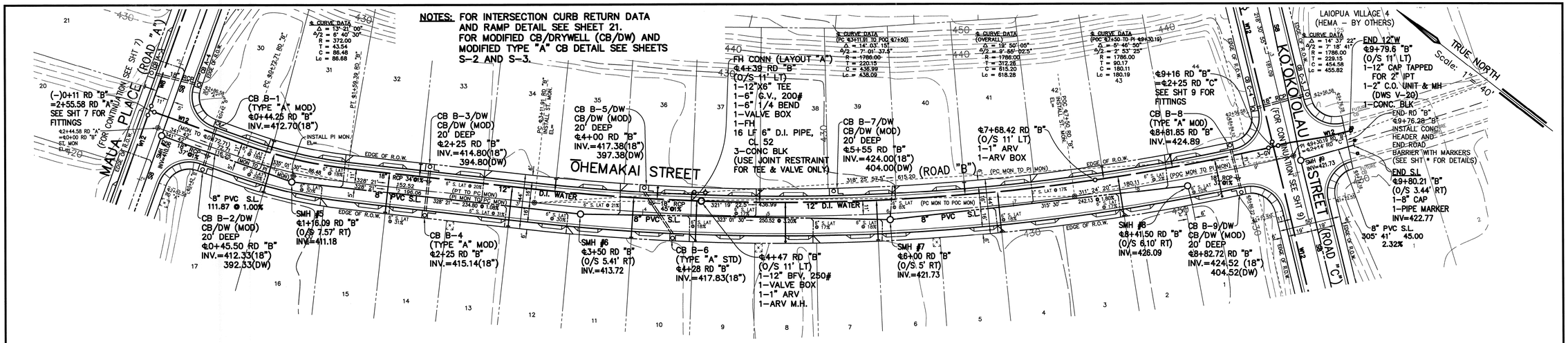

DRIVEWAY LOCATION SCHEDULE								
LOT	¢STA	DRIVEWAY LENGTH	LOT	¢STA	DRIVEWAY LENGTH	LOT	¢STA	DRIVEWAY LENGTH
17	0+82	16 FEET	6	6+04	16 FEET	35	3+58	16 FEET
16	1+29	16 FEET	5	6+75	16 FEET	36	4+25	16 FEET
15	1+79	16 FEET	4	7+24	16 FEET	37	4+80	16 FEET
14	2+07	16 FEET	3	7+73	16 FEET	38	5+22	16 FEET
13	2+79	16 FEET	2	8+01	16 FEET	39	5+92	16 FEET
12	3+28	16 FEET	1	8+50	16 FEET	40	6+48	16 FEET
11	3+57	16 FEET	30	0+79	16 FEET	41	7+05	16 FEET
10	4+06	16 FEET	31	1+45	16 FEET	42	7+61	16 FEET
9	4+77	16 FEET	32	1+95	16 FEET	43	8+16	16 FEET
8	5+26	16 FEET	33	2+58	16 FEET	44	8+46	16 FEET
7	5+75	16 FEET	34	3+13	16 FEET			

LEGEND:

- 1" TYPE "A" WATER LATERAL FOR 5/8" METER
- 1-1/2" TYPE "C" WATER LATERAL FOR 5/8" METERS
- 6" SEWER LATERAL (DOUBLE)
- 6" SEWER LATERAL (SINGLE)
- ELECTRICAL TRANSFORMER EASEMENT

PLAN – ŌHEMAKAI STREET (ROAD "B" – 44-FT WIDE)

SCALE: 1" = 40'

40 20 0 40 80
Graphic Scale in Feet

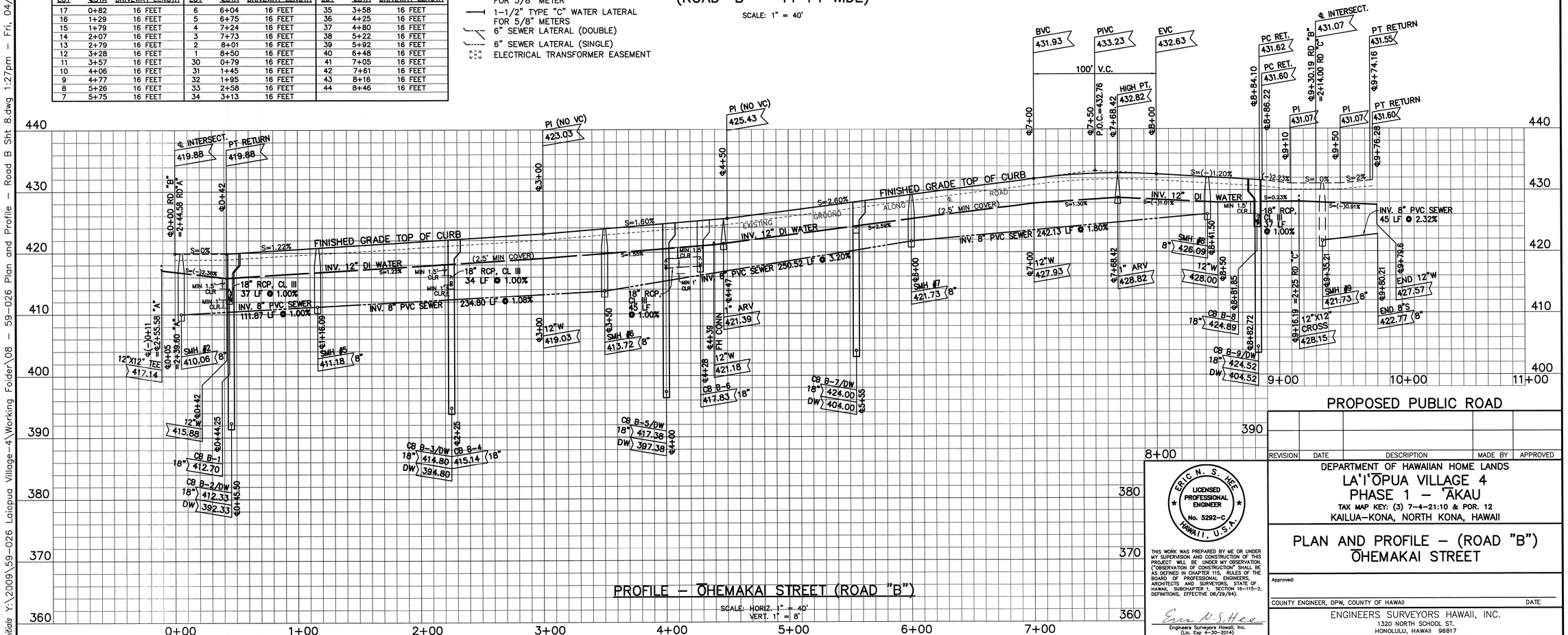

REVISION	DATE	DESCRIPTION	MADE BY	APPROVED

ERIC N. S. HEE
LICENSED PROFESSIONAL ENGINEER
No. 5292-C
HAWAII, U.S.A.

THIS WORK WAS PREPARED BY ME OR UNDER MY SUPERVISION AND CONSTRUCTION OF THIS PROJECT WILL BE UNDER MY OBSERVATION. ("OBSERVATION OF CONSTRUCTION" SHALL BE AS DEFINED IN CHAPTER 115, RULES OF THE BOARD OF PROFESSIONAL ENGINEERS, ARCHITECTS AND SURVEYORS, STATE OF HAWAII, SUBCHAPTER 1, SECTION 16-115-2, DEFINITIONS, EFFECTIVE 06/29/94).

Eric N. S. Hee
Engineers Surveyors Hawaii, Inc.
(Lic. Exp 4-30-2014)

DEPARTMENT OF HAWAIIAN HOME LANDS
LA'I'ŌPUA VILLAGE 4
PHASE 1 – 'ĀKAU
TAX MAP KEY: (3) 7-4-21:10 & POR. 12
KAILUA-KONA, NORTH KONA, HAWAII

PLAN AND PROFILE – (ROAD "B")
ŌHEMAKAI STREET

Approved:

COUNTY ENGINEER, DPW, COUNTY OF HAWAII — DATE

ENGINEERS SURVEYORS HAWAII, INC.
1320 NORTH SCHOOL ST.
HONOLULU, HAWAII 96817

FILE	POCKET	FOLDER	NO.

Initials Y:\2009\59-026 Laiopua Village-4\Working Folder\08 - 59-026 Plan and Profile - Road B Sht 8.dwg 1:27pm - Fri, 04/12/13

NOTES: FOR INTERSECTION CURB RETURN DATA AND RAMP DETAIL SEE SHEET 21.
FOR MODIFIED CB/DRYWELL (CB/DW) AND MODIFIED TYPE "A" CB DETAIL SEE SHEETS S-2 AND S-3.

LEGEND:

- 1" TYPE "A" WATER LATERAL FOR 5/8" METER
- 1-1/2" TYPE "C" WATER LATERAL FOR 5/8" METERS
- 6" SEWER LATERAL (DOUBLE)
- 6" SEWER LATERAL (SINGLE)
- ELECTRICAL TRANSFORMER EASEMENT

DRIVEWAY LOCATION SCHEDULE		
LOT	℄STA	DRIVEWAY LENGTH
119	4+35	16 FEET
120	7+09.58	24 FEET

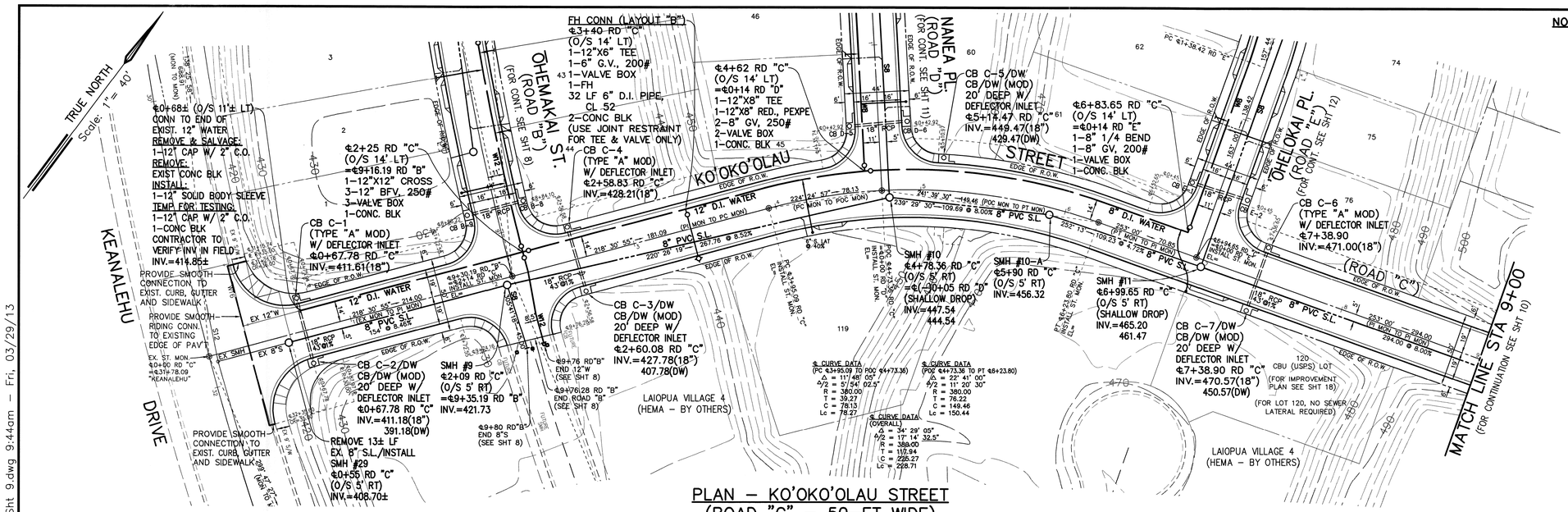

PLAN – KO'OKO'OLAU STREET (ROAD "C" – 50-FT WIDE)

SCALE: 1" = 40'

Graphic Scale in Feet (40 20 0 40 80)

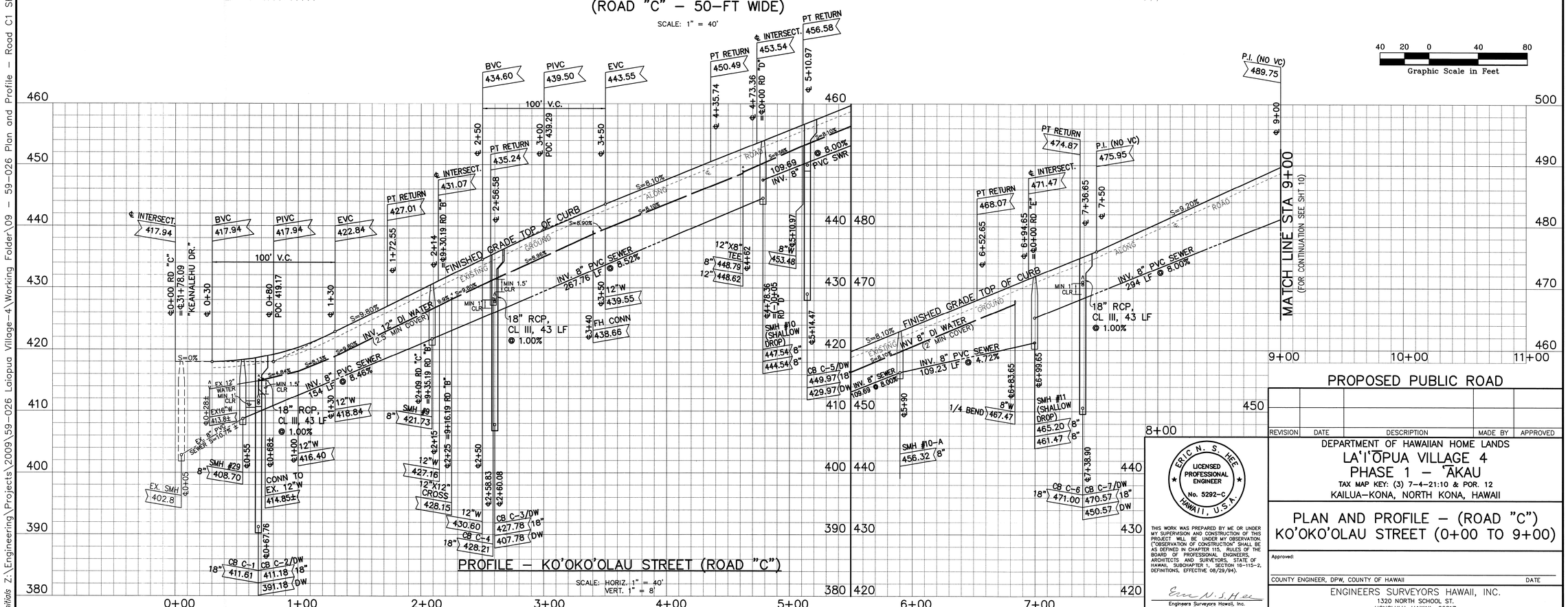

PROFILE – KO'OKO'OLAU STREET (ROAD "C")

SCALE: HORIZ. 1" = 40'
VERT. 1" = 8'

PROPOSED PUBLIC ROAD

REVISION	DATE	DESCRIPTION	MADE BY	APPROVED

ERIC N. S. HEE
LICENSED PROFESSIONAL ENGINEER
No. 5292-C
HAWAII, U.S.A.

THIS WORK WAS PREPARED BY ME OR UNDER MY SUPERVISION AND CONSTRUCTION OF THIS PROJECT WILL BE UNDER MY OBSERVATION. ("OBSERVATION OF CONSTRUCTION" SHALL BE AS DEFINED IN CHAPTER 115, RULES OF THE BOARD OF PROFESSIONAL ENGINEERS, ARCHITECTS AND SURVEYORS, STATE OF HAWAII, SUBCHAPTER 1, SECTION 16-115-2, DEFINITIONS, EFFECTIVE 06/29/94).

Eric N. S. Hee
Engineers Surveyors Hawaii, Inc.
(Lic. Exp 4-30-2014)

DEPARTMENT OF HAWAIIAN HOME LANDS
LA'I'ŌPUA VILLAGE 4
PHASE 1 – 'ĀKAU
TAX MAP KEY: (3) 7-4-21:10 & POR. 12
KAILUA-KONA, NORTH KONA, HAWAII

PLAN AND PROFILE – (ROAD "C")
KO'OKO'OLAU STREET (0+00 TO 9+00)

Approved:

COUNTY ENGINEER, DPW, COUNTY OF HAWAII — DATE

ENGINEERS SURVEYORS HAWAII, INC.
1320 NORTH SCHOOL ST.
HONOLULU, HAWAII 96817

FILE	POCKET	FOLDER	NO.

Initials Z:\Engineering\Projects\2009\59-026 Laiopua Village-4\Working Folder\09 – 59-026 Plan and Profile – Road C1 Sht 9.dwg 9:44am – Fri, 03/29/13

NOTES: FOR INTERSECTION CURB RETURN DATA AND RAMP DETAIL SEE SHEET 21.
FOR MODIFIED CB/DRYWELL (CB/DW) AND MODIFIED TYPE "A" CB DETAIL SEE SHEETS S-2 AND S-3.

LEGEND:
- 1" TYPE "A" WATER LATERAL FOR 5/8" METER
- 1-1/2" TYPE "C" WATER LATERAL FOR 5/8" METERS
- 6" SEWER LATERAL (DOUBLE)
- 6" SEWER LATERAL (SINGLE)
- ELECTRICAL TRANSFORMER EASEMENT

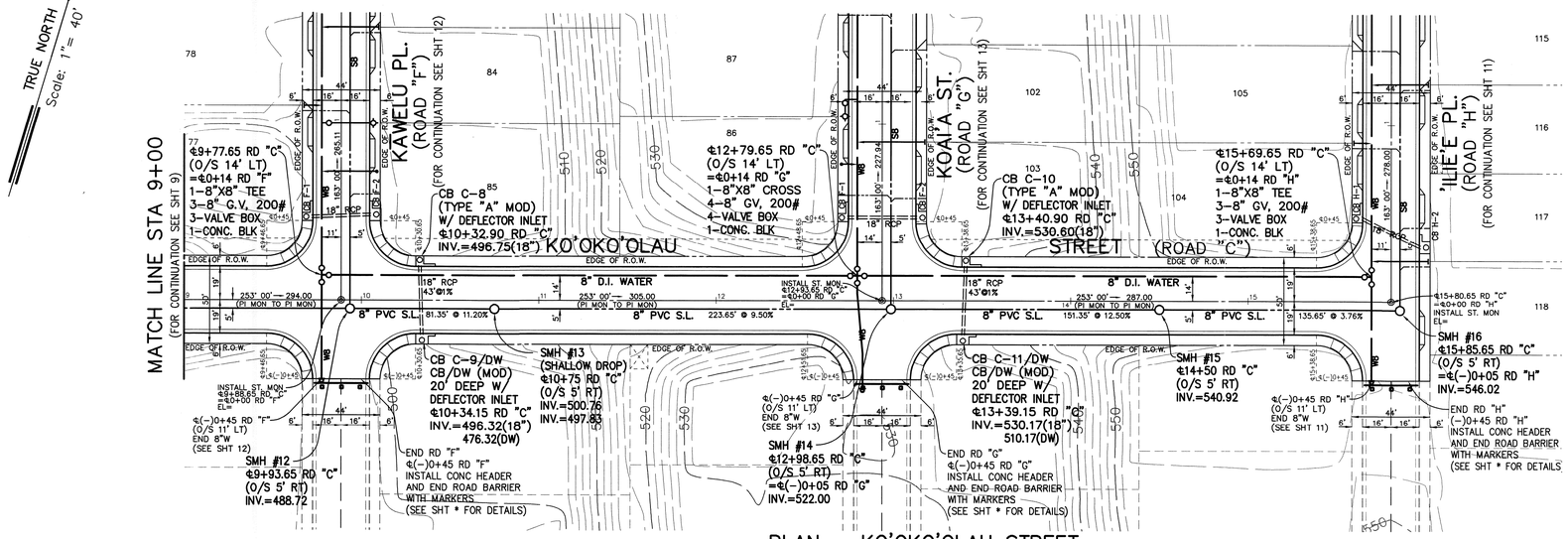

PLAN – KO'OKO'OLAU STREET
(ROAD "C" – 50-FT WIDE)

SCALE: 1" = 40'

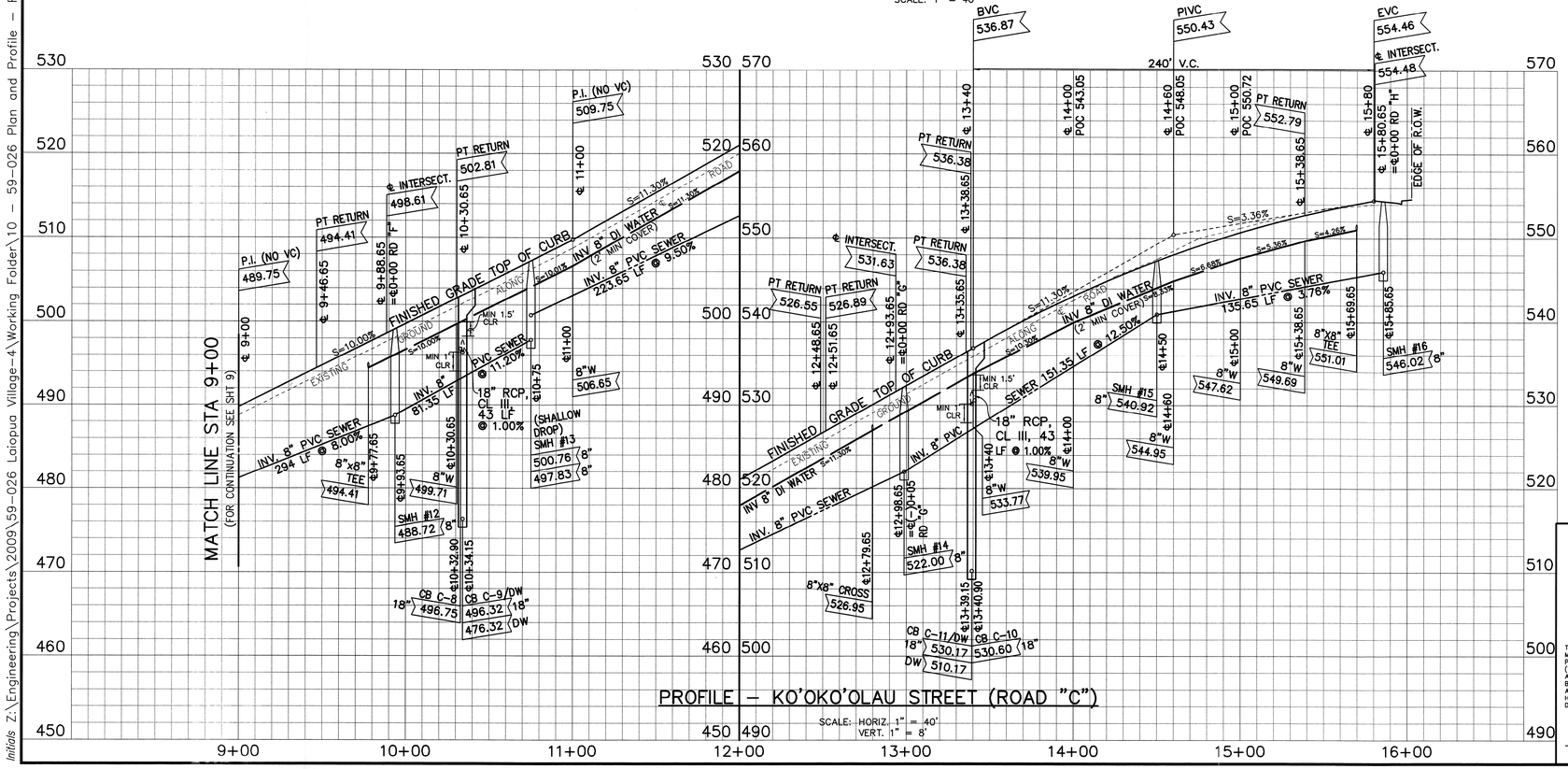

PROFILE – KO'OKO'OLAU STREET (ROAD "C")

SCALE: HORIZ. 1" = 40'
VERT. 1" = 8'

Graphic Scale in Feet (40 20 0 40 80)

PROPOSED PUBLIC ROAD

REVISION	DATE	DESCRIPTION	MADE BY	APPROVED

DEPARTMENT OF HAWAIIAN HOME LANDS
LA'I'ŌPUA VILLAGE 4
PHASE 1 – 'ĀKAU
TAX MAP KEY: (3) 7-4-21:10 & POR. 12
KAILUA-KONA, NORTH KONA, HAWAII

PLAN AND PROFILE – ROAD "C"
KO'OKO'OLAU STREET (9+00 TO END)

ERIC N. S. HEE — LICENSED PROFESSIONAL ENGINEER No. 5292-C — HAWAII, U.S.A.

THIS WORK WAS PREPARED BY ME OR UNDER MY SUPERVISION AND CONSTRUCTION OF THIS PROJECT WILL BE UNDER MY OBSERVATION. ("OBSERVATION OF CONSTRUCTION" SHALL BE AS DEFINED IN CHAPTER 115, RULES OF THE BOARD OF PROFESSIONAL ENGINEERS, ARCHITECTS AND SURVEYORS, STATE OF HAWAII, SUBCHAPTER 1, SECTION 16-115-2, DEFINITIONS, EFFECTIVE 08/29/94).

Eric N. S. Hee
Engineers Surveyors Hawaii, Inc.
(Lic. Exp 4-30-2014)

Approved:
COUNTY ENGINEER, DPW, COUNTY OF HAWAII — DATE

ENGINEERS SURVEYORS HAWAII, INC.
1320 NORTH SCHOOL ST.
HONOLULU, HAWAII 96817

FILE	POCKET	FOLDER	NO.

Initials Z:\Engineering\Projects\2009\59-026 Laiopua Village-4\Working Folder\10 - 59-026 Plan and Profile - Road C2 Sht 10.dwg 9:48am - Fri, 03/29/13

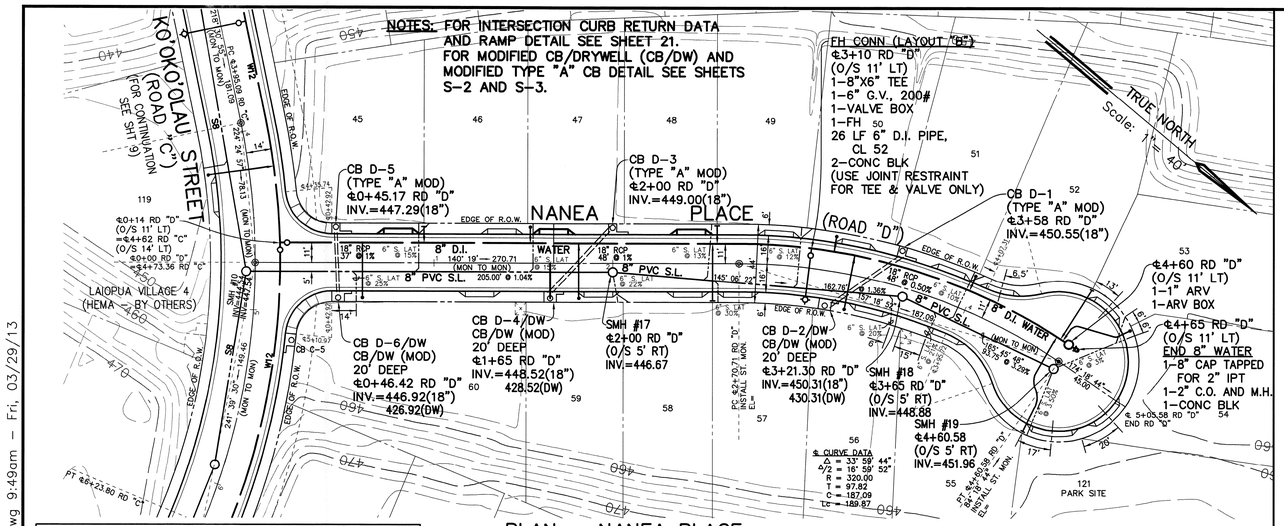

PLAN – NANEA PLACE (ROAD "D" – 44-FT WIDE)

SCALE: 1" = 40'

DRIVEWAY LOCATION SCHEDULE (ROAD "D")					
LOT	℄STA	DRIVEWAY LENGTH	LOT	℄STA	DRIVEWAY LENGTH
45	0+80	16 FEET	54	PER PLAN	16 FEET
46	1+38	16 FEET	121	PER PLAN	20 FEET
47	1+67	16 FEET	55	3+95.72	16 FEET
48	2+44	16 FEET	56	3+48	16 FEET
49	2+92	16 FEET	57	2+70	16 FEET
50	3+33	16 FEET	58	2+42	16 FEET
51	3+86	16 FEET	59	1+92	16 FEET
52	PER PLAN	16 FEET	60	1+25	16 FEET
53	PER PLAN	16 FEET			

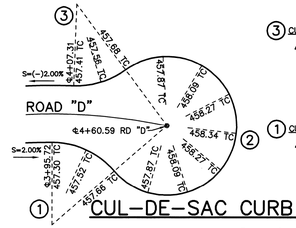

CUL-DE-SAC CURB RETURN

SCALE: 1" = 40'

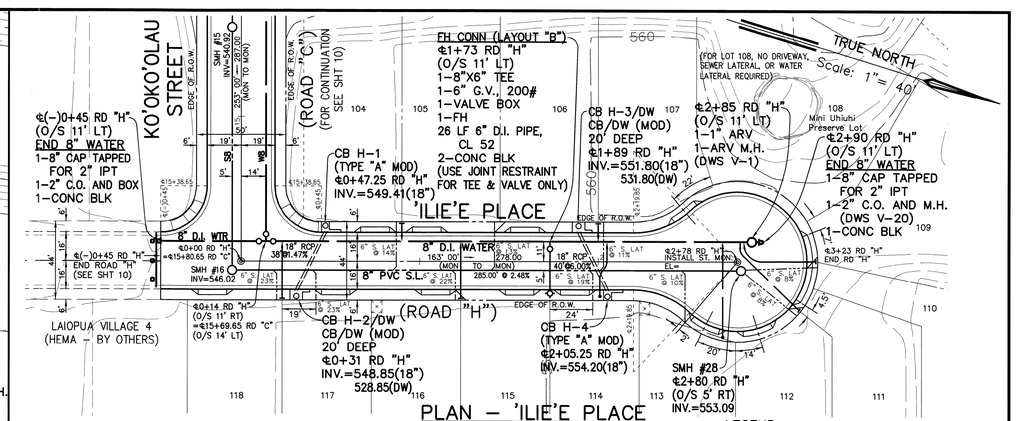

PLAN – 'ILIE'E PLACE (ROAD "H" – 44-FT WIDE)

SCALE: 1" = 40'

DRIVEWAY LOCATION SCHEDULE (ROAD "H")		
LOT	℄STA	DRIVEWAY LENGTH
104	0+76	16 FEET
105	1+04	16 FEET
106	1+59	16 FEET
107	PER PLAN	16 FEET
108	NO DRIVEWAY	
109-111	PER PLAN	CONTINUOUS
112	PER PLAN	16 FEET
113	PER PLAN	16 FEET
114	1+87	16 FEET
115	1+56	16 FEET
116	1+09	16 FEET
117	0+53	16 FEET
118	(-)0+16	16 FEET

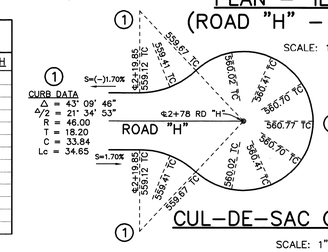

CUL-DE-SAC CURB RETURN

SCALE: 1" = 40'

LEGEND:

- 1" TYPE "A" WATER LATERAL FOR 5/8" METER
- 1-1/2" TYPE "C" WATER LATERAL FOR 5/8" METERS
- 6" SEWER LATERAL (DOUBLE)
- 6" SEWER LATERAL (SINGLE)
- ELECTRICAL TRANSFORMER EASEMENT

40 20 0 40 80
Graphic Scale in Feet

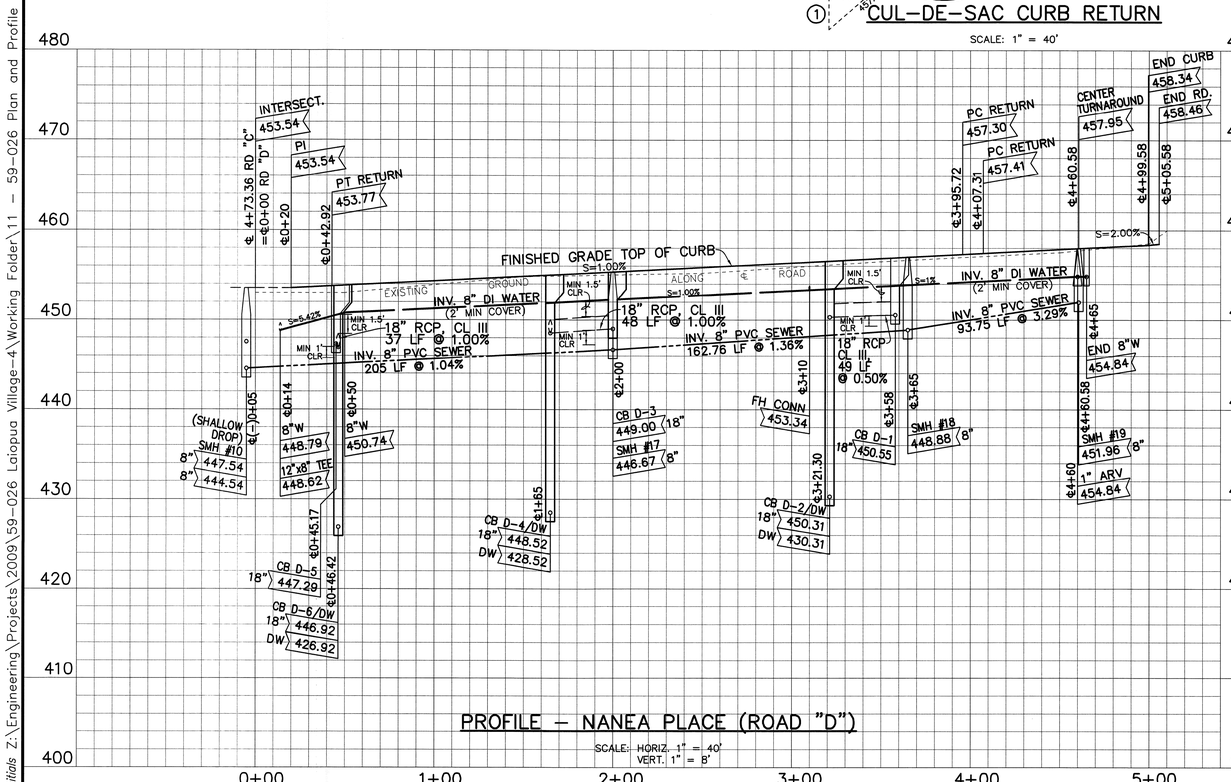

PROFILE – NANEA PLACE (ROAD "D")

SCALE: HORIZ. 1" = 40'
VERT. 1" = 8'

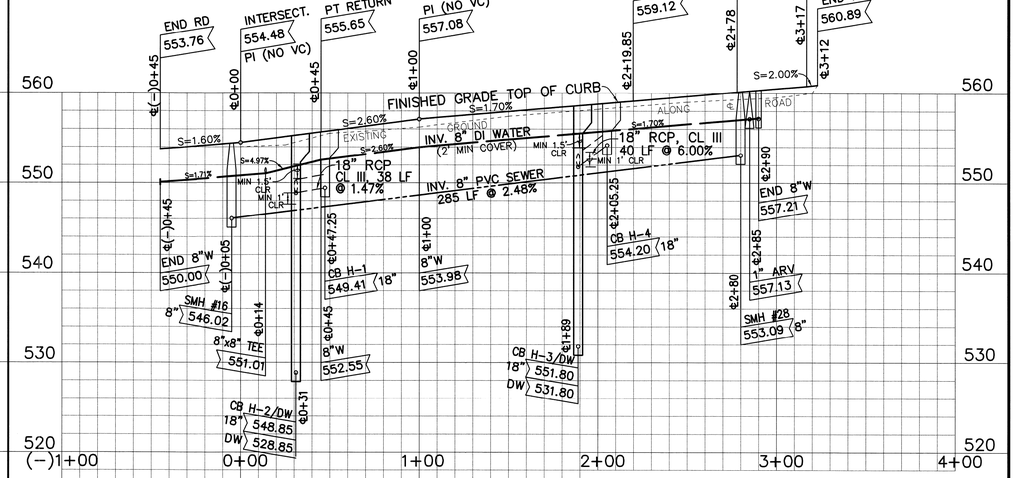

PROFILE – 'ILIE'E PLACE (ROAD "H")

SCALE: HORIZ. 1" = 40'
VERT. 1" = 8'

PROPOSED PUBLIC ROAD

REVISION	DATE	DESCRIPTION	MADE BY	APPROVED

ERIC N. S. HEE
LICENSED PROFESSIONAL ENGINEER
No. 5292-C
HAWAII, U.S.A.

THIS WORK WAS PREPARED BY ME OR UNDER MY SUPERVISION AND CONSTRUCTION OF THIS PROJECT WILL BE UNDER MY OBSERVATION. ("OBSERVATION OF CONSTRUCTION" SHALL BE AS DEFINED IN CHAPTER 115, RULES OF THE BOARD OF PROFESSIONAL ENGINEERS, ARCHITECTS AND SURVEYORS, STATE OF HAWAII, SUBCHAPTER 1, SECTION 16-115-2, DEFINITIONS, EFFECTIVE 08/29/94).

Engineers Surveyors Hawaii, Inc.
(Lic. Exp 4-30-2014)

DEPARTMENT OF HAWAIIAN HOME LANDS
LA'I'ŌPUA VILLAGE 4
PHASE 1 – 'AKAU
TAX MAP KEY: (3) 7-4-21:10 & POR. 12
KAILUA-KONA, NORTH KONA, HAWAII

PLAN AND PROFILE – (ROADS "D" AND "H")
NANEA PLACE AND 'ILIE'E PLACE

Approved:

COUNTY ENGINEER, DPW, COUNTY OF HAWAII DATE

ENGINEERS SURVEYORS HAWAII, INC.
1320 NORTH SCHOOL ST.
HONOLULU, HAWAII 96817

FILE	POCKET	FOLDER	NO.

Initials Z:\Engineering\Projects\2009\59-026 Laiopua Village-4\Working Folder\11 - 59-026 Plan and Profile - Road D and H Sht 11.dwg 9:49am - Fri, 03/29/13

NOTES: FOR INTERSECTION CURB RETURN DATA AND RAMP DETAIL SEE SHEET 21.
FOR MODIFIED CB/DRYWELL (CB/DW) AND MODIFIED TYPE "A" CB DETAIL SEE SHTS S-2 & S-3.

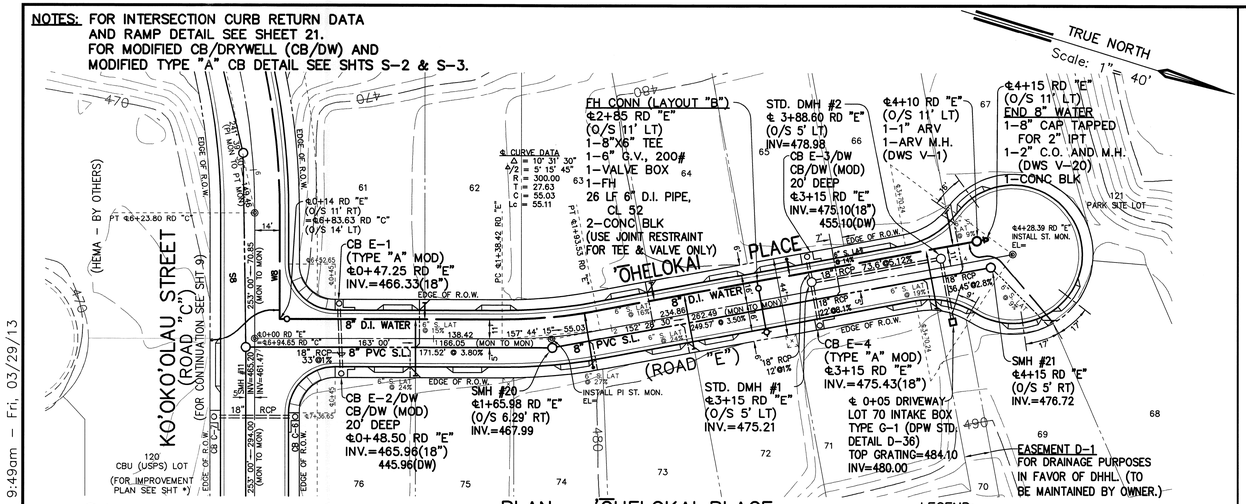

PLAN – 'ŌHELOKAI PLACE (ROAD "E" – 44-FT WIDE)

SCALE: 1" = 40'

LEGEND:

- 1" TYPE "A" WATER LATERAL FOR 5/8" METER
- 1-1/2" TYPE "C" WATER LATERAL FOR 5/8" METERS
- 6" SEWER LATERAL (DOUBLE)
- 6" SEWER LATERAL (SINGLE)
- ELECTRICAL TRANSFORMER EASEMENT

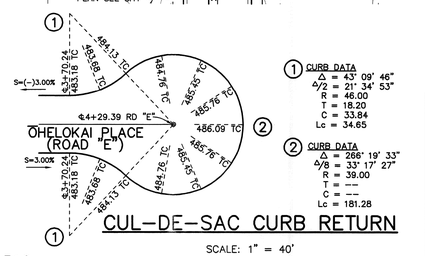

① CURB DATA
Δ = 43° 09' 46"
Δ/2 = 21° 34' 53"
R = 46.00
T = 18.20
C = 33.84
Lc = 34.65

② CURB DATA
Δ = 266° 19' 33"
Δ/8 = 33° 17' 27"
R = 39.00
T = ---
C = ---
Lc = 181.28

CUL-DE-SAC CURB RETURN

SCALE: 1" = 40'

DRIVEWAY LOCATION SCHEDULE 'ŌHELOKAI PLACE					
LOT	℄STA	DRIVEWAY LENGTH	LOT	℄STA	DRIVEWAY LENGTH
61	0+80	16 FEET	69	PER PLAN	16 FEET
62	1+35	16 FEET	70	PER PLAN	16 FEET
63	2+11	16 FEET	71	3+65	16 FEET
64	2+67	16 FEET	72	2+58	16 FEET
65	2+96	16 FEET	73	2+28	16 FEET
66	3+54	16 FEET	74	1+77	16 FEET
67	PER PLAN	16 FEET	75	1+19	16 FEET
121	N/A	N/A	76	0+75	16 FEET
68	PER PLAN	16 FEET			

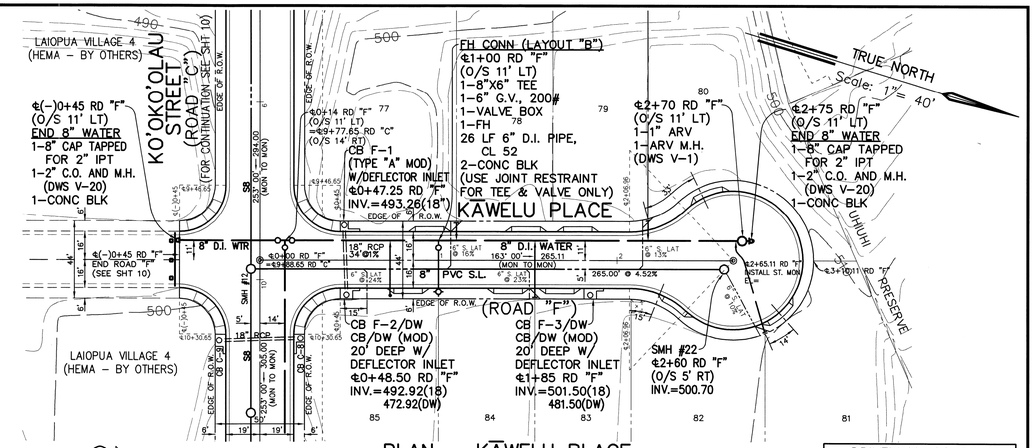

PLAN – KĀWELU PLACE (ROAD "F" – 44-FT WIDE)

SCALE: 1" = 40'

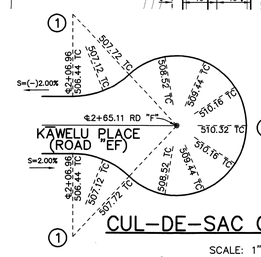

① CURB DATA
Δ = 43° 09' 46"
Δ/2 = 21° 34' 53"
R = 46.00
T = 18.20
C = 33.84
Lc = 34.65

② CURB DATA
Δ = 266° 19' 33"
Δ/8 = 33° 17' 27"
R = 39.00
T = ---
C = ---
Lc = 181.28

CUL-DE-SAC CURB RETURN

SCALE: 1" = 40'

DRIVEWAY LOCATION SCHEDULE – KĀWELU PLACE		
LOT	℄STA	DRIVEWAY LENGTH
77	0+95	16 FEET
78	1+49	16 FEET
79	1+78	16 FEET
80	PER PLAN	16 FEET
81	PER PLAN	16 FEET
82	PER PLAN	16 FEET
83	1+68	16 FEET
84	1+39	16 FEET
85	0+85	16 FEET

40 20 0 40 80
Graphic Scale in Feet

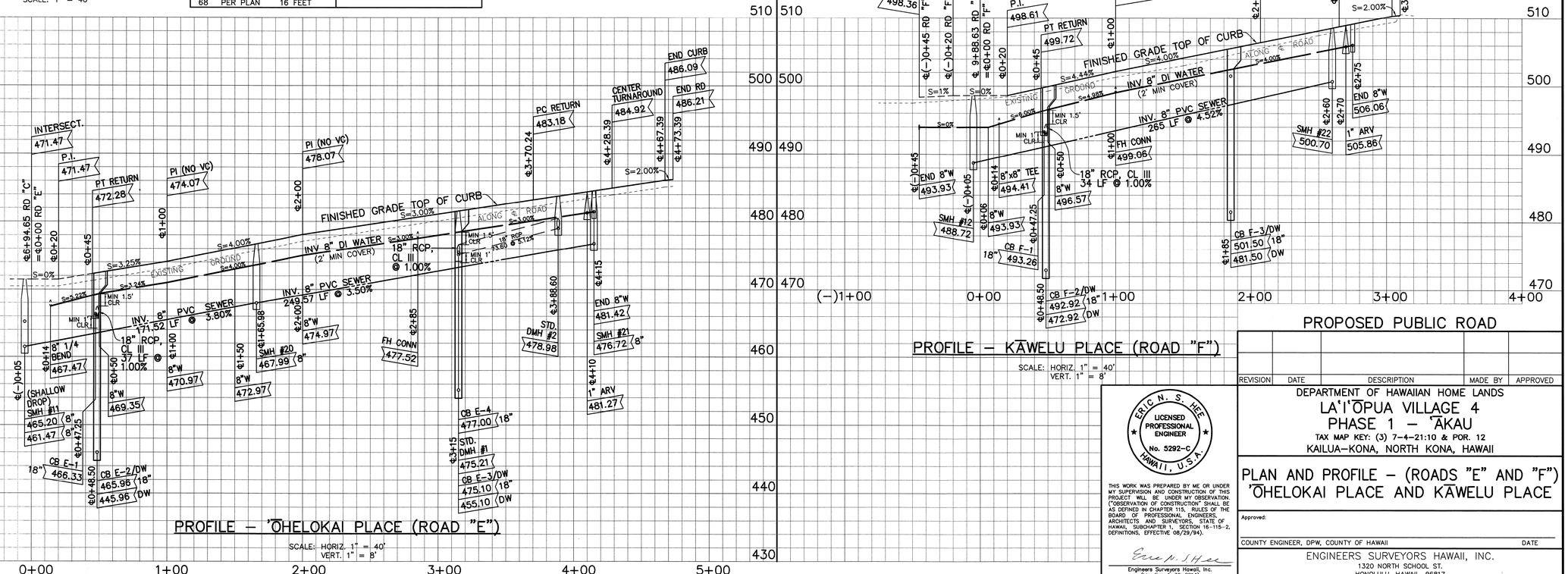

REVISION	DATE	DESCRIPTION	MADE BY	APPROVED

ERIC N. S. HEE
LICENSED PROFESSIONAL ENGINEER
No. 5292-C
HAWAII, U.S.A.

THIS WORK WAS PREPARED BY ME OR UNDER MY SUPERVISION AND CONSTRUCTION OF THIS PROJECT WILL BE UNDER MY OBSERVATION. ("OBSERVATION OF CONSTRUCTION" SHALL BE AS DEFINED IN CHAPTER 115, RULES OF THE BOARD OF PROFESSIONAL ENGINEERS, ARCHITECTS AND SURVEYORS, STATE OF HAWAII, SUBCHAPTER 1, SECTION 16-115-2, DEFINITIONS, EFFECTIVE 08/29/94).

Eric N. S. Hee
Engineers Surveyors Hawaii, Inc.
(Lic. Exp 4-30-2014)

DEPARTMENT OF HAWAIIAN HOME LANDS
LA'I'ŌPUA VILLAGE 4
PHASE 1 – 'ĀKAU
TAX MAP KEY: (3) 7-4-21:10 & POR. 12
KAILUA-KONA, NORTH KONA, HAWAII

PLAN AND PROFILE – (ROADS "E" AND "F")
'ŌHELOKAI PLACE AND KĀWELU PLACE

Approved:

COUNTY ENGINEER, DPW, COUNTY OF HAWAII — DATE

ENGINEERS SURVEYORS HAWAII, INC.
1320 NORTH SCHOOL ST.
HONOLULU, HAWAII 96817

FILE	POCKET	FOLDER	NO.

Initials Z:\Engineering\Projects\2009\59-026 Laiopua Village-4\Working Folder\12 - 59-026 Plan and Profile - Road E and F Sht 12.dwg 9:49am - Fri, 03/29/13

NOTES: FOR INTERSECTION CURB RETURN DATA AND RAMP DETAIL SEE SHEET 15.
FOR MODIFIED CB/DRYWELL (CB/DW) AND MODIFIED TYPE "A" CB DETAIL SEE SHTS S-2 & S-3.

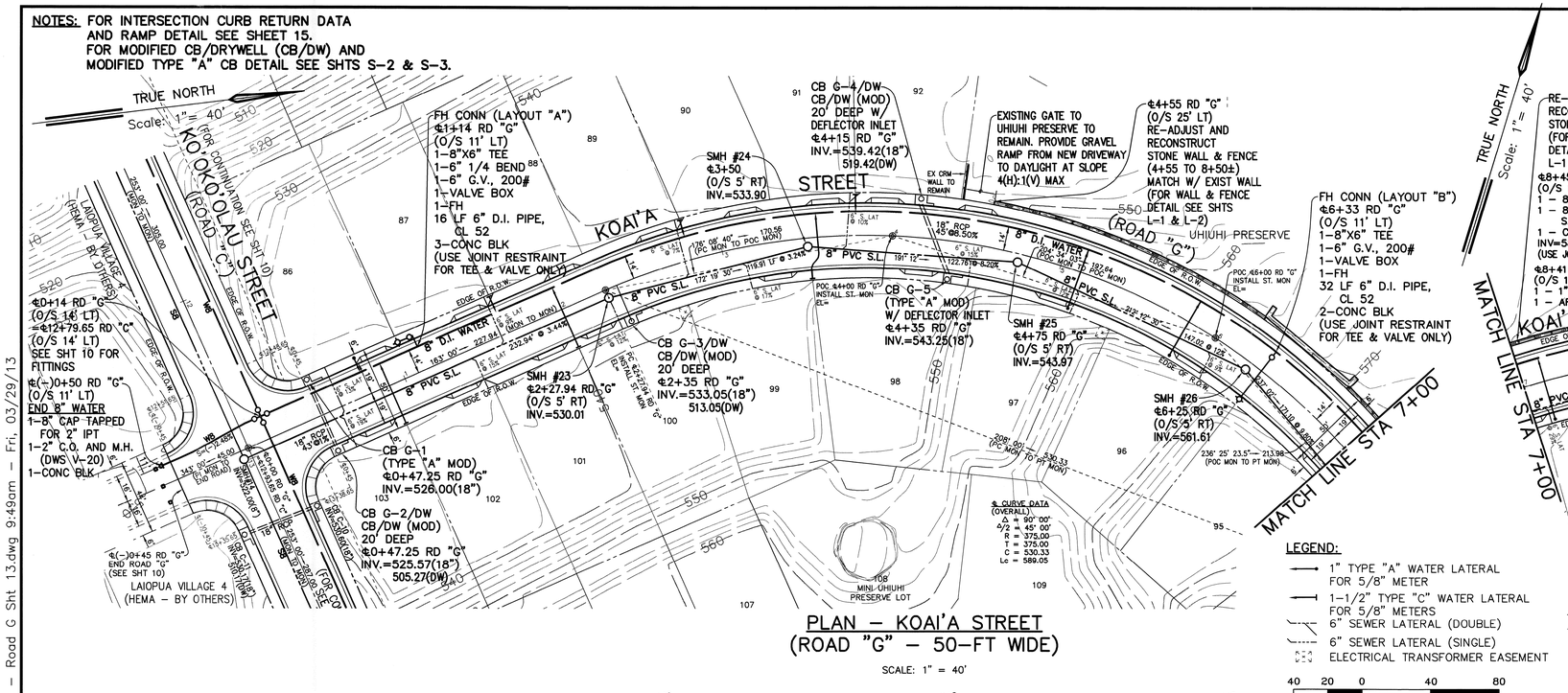

PLAN – KOAI'A STREET
(ROAD "G" – 50-FT WIDE)

SCALE: 1" = 40'

LEGEND:

- 1" TYPE "A" WATER LATERAL FOR 5/8" METER
- 1-1/2" TYPE "C" WATER LATERAL FOR 5/8" METERS
- 6" SEWER LATERAL (DOUBLE)
- 6" SEWER LATERAL (SINGLE)
- ELECTRICAL TRANSFORMER EASEMENT

40 20 0 40 80
Graphic Scale in Feet

DRIVEWAY LOCATION SCHEDULE		
LOT	±STA	DRIVEWAY LENGTH
86	0+89	16 FEET
87	1+49	16 FEET
88	2+09	16 FEET
89	2+65	16 FEET
90	3+16	16 FEET
91	3+62	16 FEET
92	3+95	16 FEET
93	8+27	16 FEET
94	7+92	16 FEET
95	6+95	16 FEET
96	5+95	16 FEET
97	5+02	16 FEET
98	4+17	16 FEET
99	3+30	16 FEET
100	2+15	16 FEET
101	1+84	16 FEET
102	1+29	16 FEET
103	0+74	16 FEET
UHIUHI PRESERVE	4+47	16 FEET

PROFILE – KOAI'A STREET (ROAD "G")

SCALE: HORIZ. 1" = 40'
VERT. 1" = 8'

REVISION	DATE	DESCRIPTION	MADE BY	APPROVED

ERIC N. S. HEE
LICENSED PROFESSIONAL ENGINEER
No. 5292-C
HAWAII, U.S.A.

THIS WORK WAS PREPARED BY ME OR UNDER MY SUPERVISION AND CONSTRUCTION OF THIS PROJECT WILL BE UNDER MY OBSERVATION. ("OBSERVATION OF CONSTRUCTION" SHALL BE AS DEFINED IN CHAPTER 115, RULES OF THE BOARD OF PROFESSIONAL ENGINEERS, ARCHITECTS AND SURVEYORS, STATE OF HAWAII, SUBCHAPTER 1, SECTION 16-115-2, DEFINITIONS, EFFECTIVE 08/29/94).

Eric N. S. Hee
Engineers Surveyors Hawaii, Inc.
(Lic. Exp 4-30-2014)

DEPARTMENT OF HAWAIIAN HOME LANDS
LA'I'ŌPUA VILLAGE 4
PHASE 1 – 'ĀKAU
TAX MAP KEY: (3) 7-4-21:10 & POR. 12
KAILUA-KONA, NORTH KONA, HAWAII

PLAN AND PROFILE – (ROAD "G")
KOAI'A STREET (0+00 TO END)

Approved:

COUNTY ENGINEER, DPW, COUNTY OF HAWAII — DATE

ENGINEERS SURVEYORS HAWAII, INC.
1320 NORTH SCHOOL ST.
HONOLULU, HAWAII 96817

FILE	POCKET	FOLDER	NO.

Initials Z:\Engineering\Projects\2009\59-026 Laiopua Village-4\Working Folder\13 - 59-026 Plan and Profile - Road G Sht 13.dwg 9:49am - Fri, 03/29/13

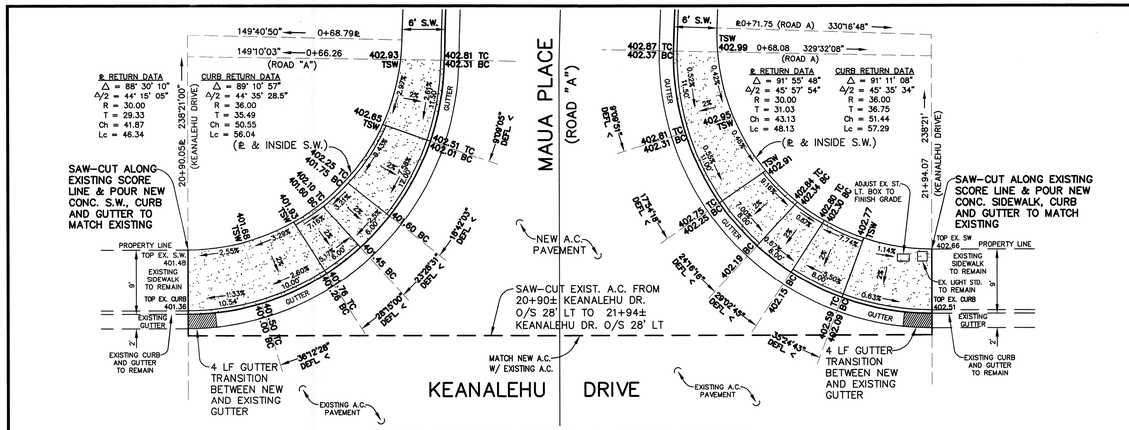

CURB RETURN DATA & RAMP DETAIL
ROAD "A" & KEANALEHU DRIVE

SCALE: 1"=10'

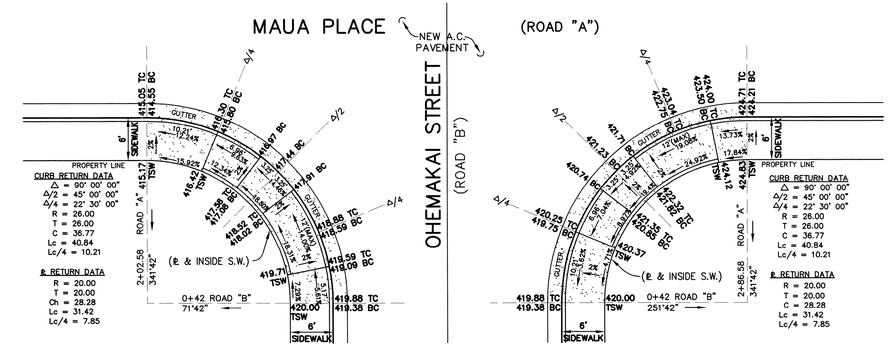

CURB RETURN DATA & CURB RAMP DETAIL
ROAD "A" & "B"

SCALE: 1"=10'

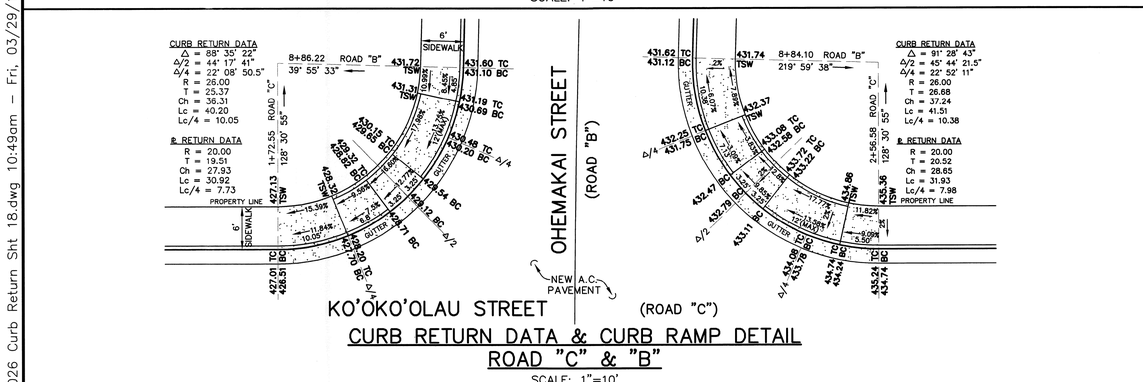

CURB RETURN DATA & CURB RAMP DETAIL
ROAD "C" & "B"

SCALE: 1"=10'

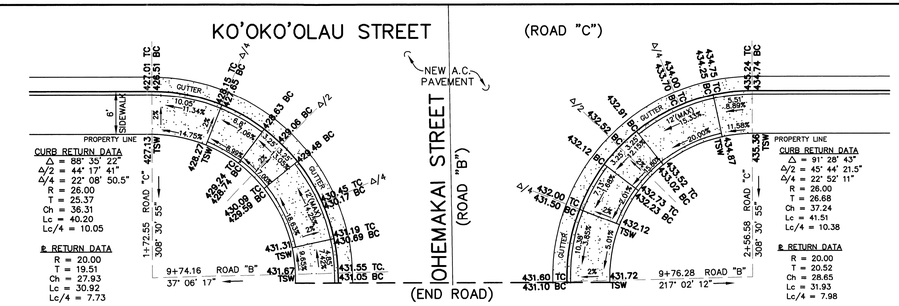

CURB RETURN DATA & CURB RAMP DETAIL
ROAD "C" & "B"

SCALE: 1"=10'

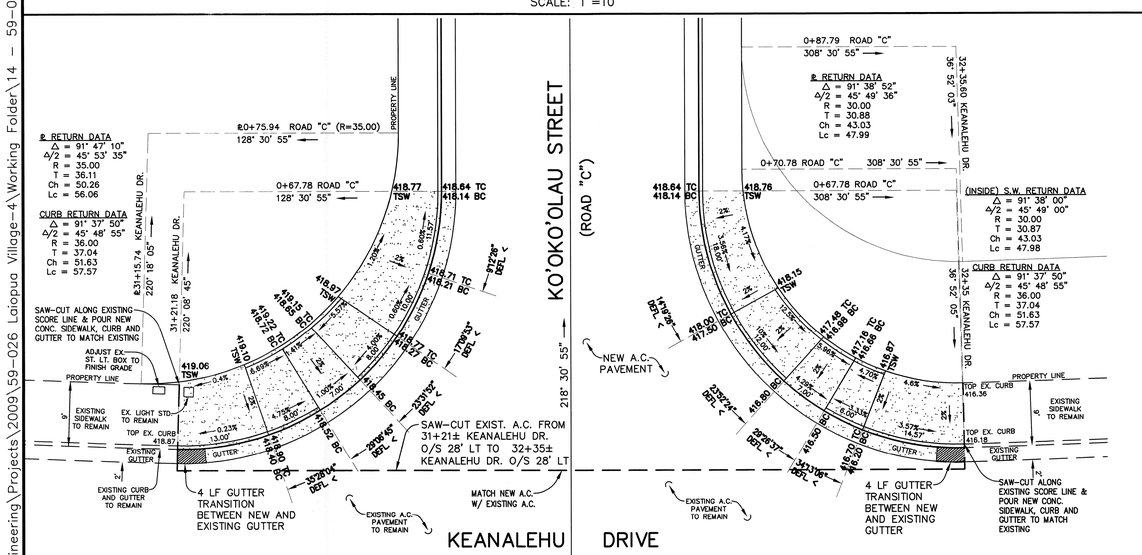

CURB RETURN DATA & CURB RAMP DETAIL
ROAD "C" & KEANALEHU DRIVE

SCALE: 1"=10'

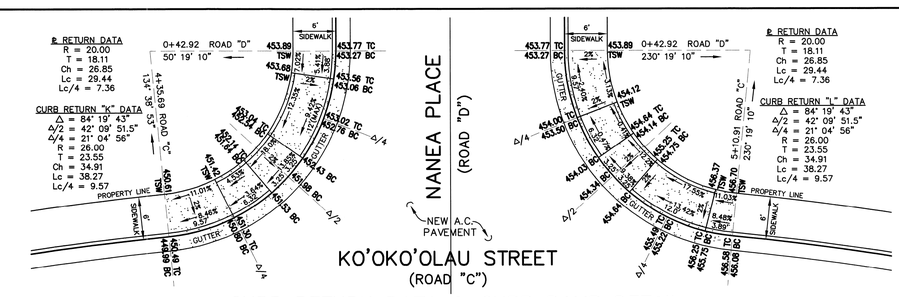

CURB RETURN DATA & CURB RAMP DETAIL
ROAD "C" & "D"

SCALE: 1"=10'

10 5 0 10 20

Graph Scale in Feet

REVISION	DATE	DESCRIPTION	MADE BY	APPROVED

DEPARTMENT OF HAWAIIAN HOME LANDS

LA'I'OPUA VILLAGE 4

PHASE 1 – 'AKAU

TAX MAP KEY: (3) 7-4-21:10 & POR. 12

KAILUA-KONA, NORTH KONA, HAWAII

CURB RETURN DATA & CURB RAMP DETAIL

ERIC N. S. HEE — LICENSED PROFESSIONAL ENGINEER — No. 5292-C — HAWAII, U.S.A.

THIS WORK WAS PREPARED BY ME OR UNDER MY SUPERVISION AND CONSTRUCTION OF THIS PROJECT WILL BE UNDER MY OBSERVATION. ("OBSERVATION OF CONSTRUCTION" SHALL BE AS DEFINED IN CHAPTER 115, RULES OF THE BOARD OF PROFESSIONAL ENGINEERS, ARCHITECTS AND SURVEYORS, STATE OF HAWAII, SUBCHAPTER 1, SECTION 16-115-2, DEFINITIONS, EFFECTIVE 08/29/94).

Eric N. S. Hee

Engineers Surveyors Hawaii, Inc.
(Lic. Exp. 4-30-2014)

Approved:

COUNTY ENGINEER, DPW, COUNTY OF HAWAII — DATE

ENGINEERS SURVEYORS HAWAII, INC.
1320 NORTH SCHOOL ST.
HONOLULU, HAWAII 96817

FILE	POCKET	FOLDER	NO.

Initials Z:\Engineering\Projects\2009\59-026 Laiopua Village-4\Working Folder\14 - 59-026 Curb Return Sht 18.dwg 10:49am - Fri, 03/29/13

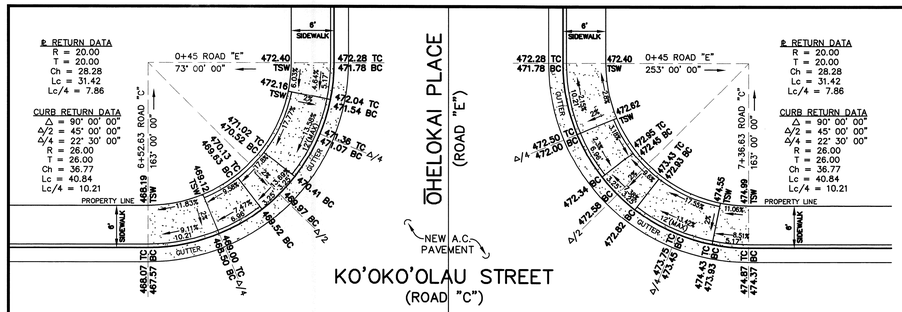

CURB RETURN DATA & CURB RAMP DETAIL
ROAD "C" & "E"
SCALE: 1"=10'

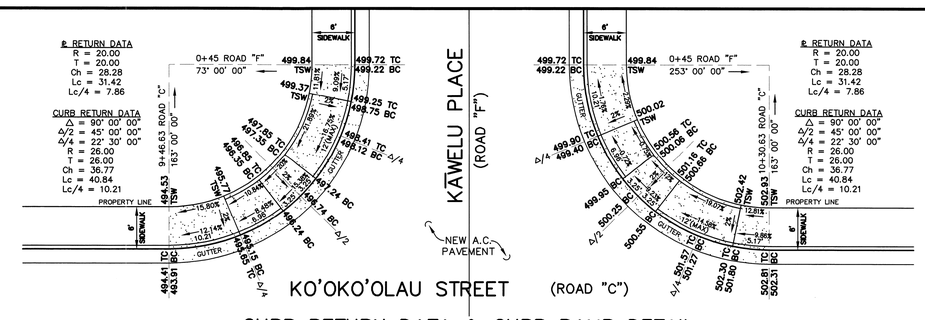

CURB RETURN DATA & CURB RAMP DETAIL
ROAD "C" & "F"
SCALE: 1"=10'

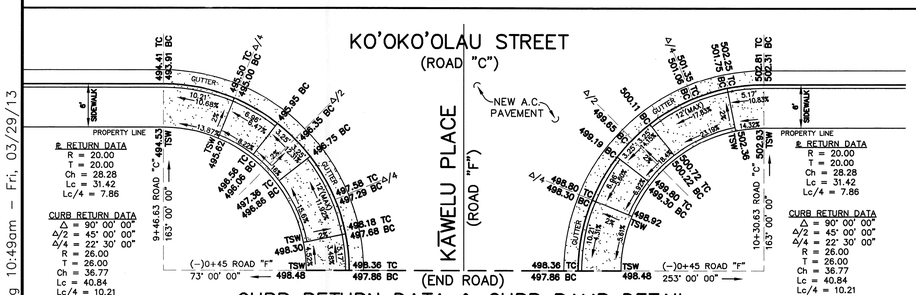

CURB RETURN DATA & CURB RAMP DETAIL
ROAD "C" & "F"
SCALE: 1"=10'

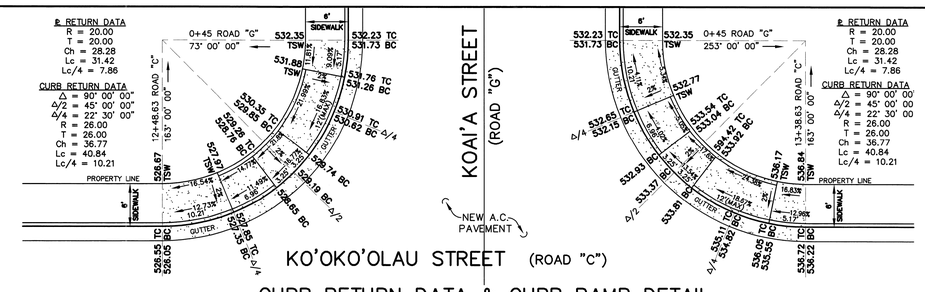

CURB RETURN DATA & CURB RAMP DETAIL
ROAD "C" & "G"
SCALE: 1"=10'

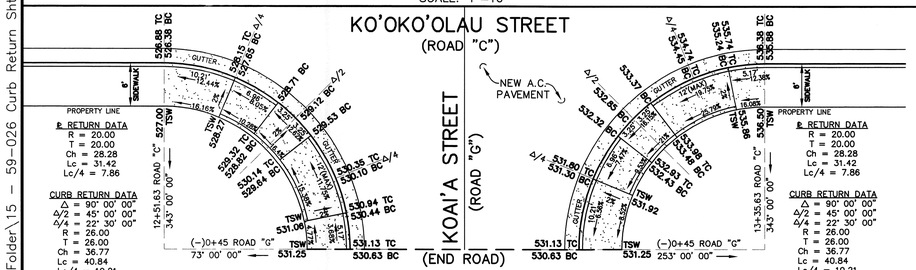

CURB RETURN DATA & CURB RAMP DETAIL
ROAD "C" & "G"
SCALE: 1"=10'

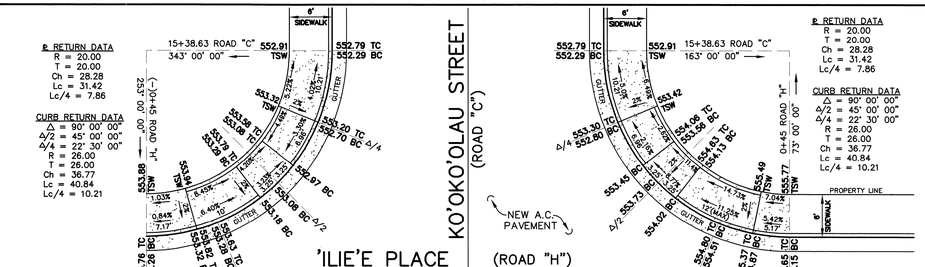

CURB RETURN DATA & CURB RAMP DETAIL
ROAD "C" & "H"
SCALE: 1"=10'

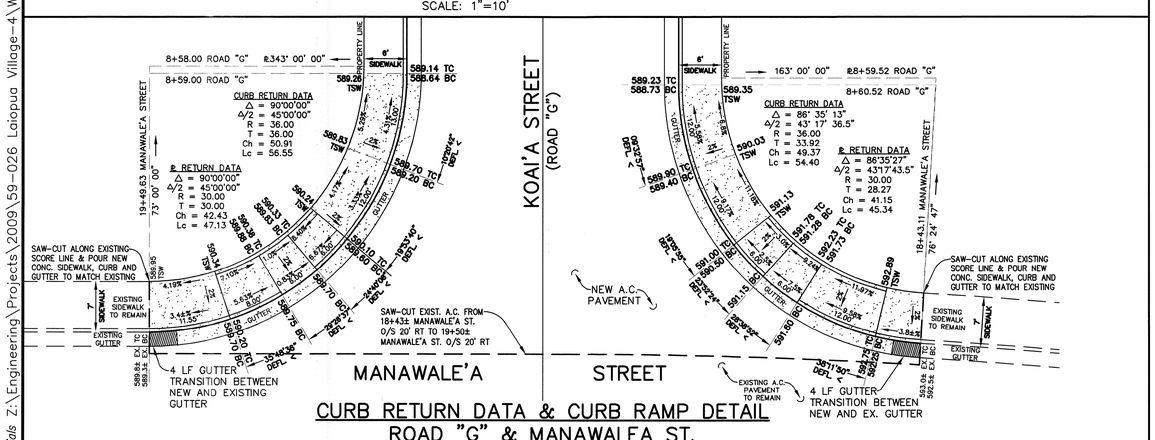

CURB RETURN DATA & CURB RAMP DETAIL
ROAD "G" & MANAWALEA ST.
SCALE: 1"=10'

10 5 0 10 20
Graphic Scale in Feet

REVISION	DATE	DESCRIPTION	MADE BY	APPROVED

ERIC N. S. HEE
LICENSED PROFESSIONAL ENGINEER
No. 5292-C
HAWAII, U.S.A.

THIS WORK WAS PREPARED BY ME OR UNDER MY SUPERVISION AND CONSTRUCTION OF THIS PROJECT WILL BE UNDER MY OBSERVATION. ("OBSERVATION OF CONSTRUCTION" SHALL BE AS DEFINED IN CHAPTER 115, RULES OF THE BOARD OF PROFESSIONAL ENGINEERS, ARCHITECTS AND SURVEYORS, STATE OF HAWAII, SUBCHAPTER 1, SECTION 16-115-2, DEFINITIONS, EFFECTIVE 08/29/94).

Engineers Surveyors Hawaii, Inc.
(Lic. Exp 4-30-2014)

DEPARTMENT OF HAWAIIAN HOME LANDS
LA'I'ŌPUA VILLAGE 4
PHASE 1 – 'AKAU
TAX MAP KEY: (3) 7-4-21:10 & POR. 12
KAILUA-KONA, NORTH KONA, HAWAII

CURB RETURN DATA
& CURB RAMP DETAIL

Approved:

COUNTY ENGINEER, DPW, COUNTY OF HAWAII — DATE

ENGINEERS SURVEYORS HAWAII, INC.
1320 NORTH SCHOOL ST.
HONOLULU, HAWAII 96817

FILE	POCKET	FOLDER	NO.

Initials Z:\Engineering\Projects\2009\59-026 Laiopua Village-4\Working Folder\15 - 59-026 Curb Return Sht 18.dwg 10:49am - Fri, 03/29/13

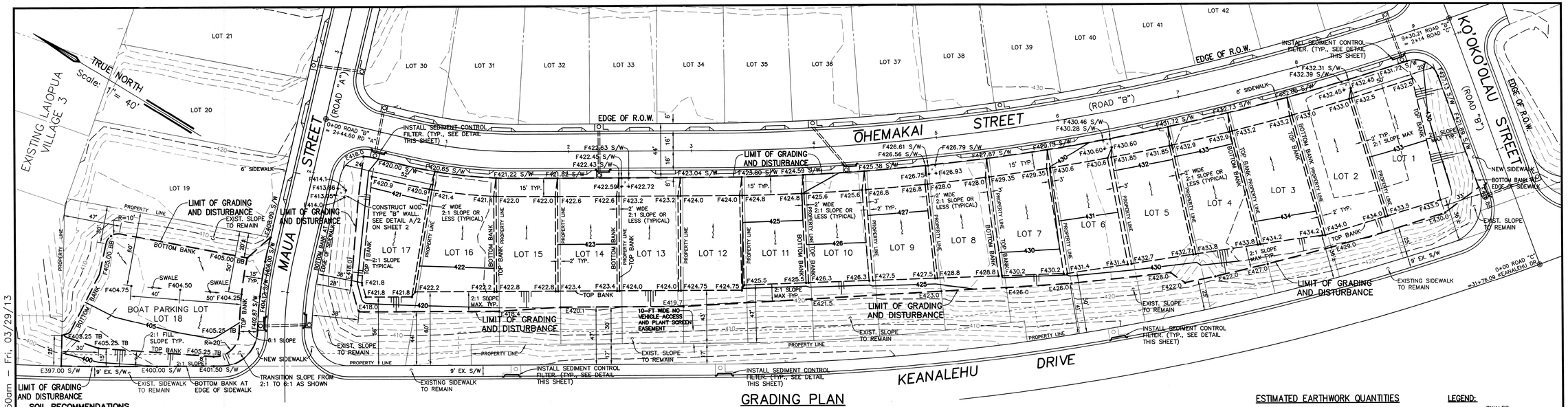

GRADING PLAN

SCALE: 1" = 40'

SOIL RECOMMENDATIONS

SITE PREPARATION:

1. PRIOR TO THE START OF ACTUAL GRADING OPERATIONS, THE SITE SHOULD BE CLEARED AND GRUBBED OF ALL VEGETATION (NOT MARKED TO REMAIN), EXISTING RUBBLE, DEBRIS, AND OTHER DELETERIOUS MATERIAL IN ACCORDANCE WITH SECTION 201 OF THE STANDARD SPECIFICATIONS FOR ROAD AND BRIDGE CONSTRUCTION (STANDARD SPECIFICATIONS) OF THE COUNTY OF HAWAII.
   a. ALL SURFACE VEGETATION AND OTHER CLEARED MATERIALS SHOULD BE REMOVED AND WASTED OFF-SITE, DUE TO THE ROCKY NATURE OF THE SURFACE MATERIALS, SOME DIFFICULTIES IN THE CLEARING OPERATIONS SHOULD BE ANTICIPATED, AND HAND-REMOVAL OF THE BRUSH, SMALL TREES AND THEIR ROOTS SHOULD BE ANTICIPATED.
   b. THE ACTUAL DEPTH OF GRUBBING CAN BEST BE DETERMINED IN THE FIELD, BUT WE BELIEVE THAT 4 TO 6 INCHES WILL LIKELY SUFFICE. THE GRUBBED MATERIALS ARE NOT SUITABLE FOR USE AS FILL AND SHOULD BE WASTED OFF-SITE.
2. AREAS TO RECEIVE FILL WHERE THE THEN-EXISTING GROUND SURFACE IS STEEPER THAN 5H:1V SHOULD BE BENCHED PRIOR TO FILL PLACEMENT. BENCHES SHOULD EXTEND THROUGH ANY LOOSE SLOPE MATERIALS INTO DENSE CLINKER OR THE INTACT BASALT. SLIVER FILLS SHOULD BE AVOIDED.

UTILITIES:

1. UTILITIES SHOULD BE INSTALLED IN ACCORDANCE WITH SECTION 206 OF THE STANDARD SPECIFICATIONS AND THE APPLICABLE SECTION FOR EACH PARTICULAR UTILITY. UTILITY BACKFILLS SHOULD BE PLACED AND COMPACTED UTILIZING THE APPROPRIATE MECHANICAL COMPACTORS AROUND AND ABOVE THE PIPES. JETTING AND PONDING AS METHODS TO COMPACT THE BACKFILLS SHOULD NOT BE ALLOWED.
2. UTILITIES MAY BE FOUNDED IN THE COMPACTED FILL, AA CLINKER, OR INTACT BASALT. WHERE SOFT OR LOOSE SPOTS ARE ENCOUNTERED AT THE BOTTOM OF UTILITY EXCAVATIONS, THEY SHOULD BE REMOVED DOWN TO PROPERLY COMPACTED FILL, DENSE CLINKER, OR INTACT BASALT AND THE RESULTING DEPRESSIONS REPLACED WITH FILL COMPACTED IN ACCORDANCE WITH THE GRADING RECOMMENDATIONS.
3. IT IS ANTICIPATED THAT MOST OF THE DEEPER UTILITIES WILL ENCOUNTER INTACT BASALT. THE USE OF HEAVY ROCK-TRENCHING EQUIPMENT AND HOE-RAMS SHOULD BE ANTICIPATED FOR THE EXCAVATIONS INTO THE BASALT.
4. AT LEAST 6 INCHES OF PIPE BEDDING OR BED COURSE SHOULD BE PROVIDED BELOW THE UTILITY PIPES. WHERE INTACT BASALT IS ENCOUNTERED AT THE PIPE INVERT LEVELS, IT SHOULD BE OVER-EXCAVATED IN ACCORDANCE WITH THE APPLICABLE SECTION PERTAINING TO EACH UTILITY, BUT AT LEAST 6 INCHES BELOW THE BOTTOM OF THE PIPES, TO ALLOW THE PLACEMENT OF GRANULAR PIPE BEDDING OR BED COURSE TO PROVIDE UNIFORM SUPPORT TO THE PIPES.
5. THE TRENCH EXCAVATIONS IN THE FILLS SHOULD EITHER BE SLOPED BACK OR SHORED IN ACCORDANCE WITH THE APPLICABLE GOVERNMENT SAFETY REGULATIONS TO PREVENT THE GRANULAR FILLS FROM CAVING IN, AND TO ENSURE SAFETY OF THE WORKERS WITHIN THE TRENCHES DURING THE CONSTRUCTION. THE DESIGN OF THE SHORING SYSTEMS SHOULD BE THE RESPONSIBILITY OF THE CONTRACTOR.
6. THE TRENCH EXCAVATIONS IN THE CRUSHED ROCK FILLS WILL LIKELY BE RAGGED WITH RAVELING AND SLOUGHING OF THE SIDEWALLS DUE TO THE TYPE OF MATERIALS WITHIN THE FILLS. SIGNIFICANT OVER-BREAKS SHOULD BE ANTICIPATED. THE CONTRACTORS SHOULD BE ADVISED TO ANTICIPATE THESE OCCURRENCES AND MAKE THE APPROPRIATE PROVISIONS IN THEIR EXCAVATION AND BACKFILLING WORK.
7. EXCAVATIONS INTO THE DEEPER COARSE ROCK FILLS CAN DAMAGE AND DESTABILIZE THE THEN-EXISTING FILLS AND SHOULD NOT BE ALLOWED.
8. THE BACKFILL FOR THE UTILITY TRENCHES SHOULD MEET THE REQUIREMENT OF STRUCTURE BACKFILL A, OR TRENCH BACKFILL A OF SECTIONS 703.20 AND 703.21, RESPECTIVELY, OF THE STANDARD SPECIFICATIONS. MATERIAL CONFORMING TO TRENCH BACKFILL A, WITH A MAXIMUM SIZE OF 1 INCH, SHOULD BE USED AROUND AND ABOVE THE PIPES TO AT LEAST 12 INCHES ABOVE THE PIPES.

FOUNDATIONS:

1. WE BELIEVE THAT THE PROPOSED DWELLINGS CAN BE SUPPORTED ON SHALLOW INDIVIDUAL SPREAD FOOTING, CONTINUOUS FOUNDATIONS OR A COMBINATION OF THESE TWO TYPES. ALTHOUGH OTHER FOUNDATION SYSTEMS HAVE BEEN EVALUATED, WE BELIEVE THAT THE RECOMMENDED SYSTEM WILL PROVE SATISFACTORY AND WILL LIKELY BE THE MOST ECONOMICAL.
2. INDIVIDUAL SPREAD FOOTINGS SHOULD HAVE A MINIMUM BASE WIDTH OF AT LEAST 18 INCHES. CONTINUOUS FOUNDATIONS SHOULD HAVE A MINIMUM BASE WIDTH OF AT LEAST 12 INCHES.
3. FOUNDATIONS SHOULD BE EMBEDDED AT LEAST 12 INCHES BELOW THE LOWEST ADJACENT COMPACTED SUBGRADE ON LEVEL GROUND. FOUNDATIONS ON SLOPES OR WITHIN 5 FEET OF THE TOP OF THE SLOPE SHOULD BE FOUNDED SUCH THAT THERE IS AT LEAST 6 FEET OF HORIZONTAL SETBACK FROM THE LOWER OUTSIDE EDGE OF THE FOUNDATION TO THE SLOPE FACE.
4. FOUNDATIONS SHOULD BEAR ON THE CRUSHED ROCK GRANULAR FILL COMPACTED IN ACCORDANCE WITH THE GRADING RECOMMENDATIONS WHERE THEY MAY BE DESIGNED FOR A MAXIMUM ALLOWABLE CAPACITY OF 3,000 POUNDS PER SQUARE FOOT (P.S.F.). THIS VALUE MAY BE INCREASED BY ONE-THIRD FOR SHORT-TERM WIND OR SEISMIC LOADS.
5. THE BOTTOM OF THE FOUNDATION EXCAVATIONS SHOULD BE CLEANED OF LOOSE MATERIALS AND COMPACTED TO AT LEAST 90 PERCENT RELATIVE COMPACTION PRIOR TO THE PLACEMENT OF THE STEEL AND CONCRETE. SOFT AREAS FOUND IN THE FILLS SHOULD BE REMOVED DOWN TO PROPERLY COMPACTED FILL OR HARD/DENSE NATURAL GROUND, AND THE RESULTING DEPRESSION BACKFILLED WITH PROPERLY COMPACTED MATERIALS.
6. STEEL REINFORCEMENT OF THE FOUNDATIONS SHOULD BE PROVIDED IN ACCORDANCE WITH THE RECOMMENDATIONS OF THE PROJECT STRUCTURAL ENGINEER. TOTAL AND DIFFERENTIAL SETTLEMENTS EXCEEDING 1/2 INCH ARE NOT ANTICIPATED UNDER THE CURRENTLY PLANNED GRADING AND THE ASSUMED COLUMN AND WALL LOADS OF 30 KIPS AND 2 KIPS PER FOOT, RESPECTIVELY. SHOULD ANY OF THESE ITEMS BE REVISED, FGE SHOULD BE NOTIFIED SUCH THAT THESE RECOMMENDATIONS CAN BE RE-EVALUATED AND REVISED, IF NECESSARY.

MISCELLANEOUS:

1. ADEQUATE DRAINAGE PROVISIONS SHOULD BE INCLUDED IN THE DESIGN OF THE PROJECT TO DIRECT THE SURFACE WATER AWAY FROM THE SLOPES, AND TO PRECLUDE THE PONDING OF WATER ADJACENT TO OR BENEATH THE PAVEMENTS, STRUCTURES AND THEIR EMBANKMENTS.
2. THE GRADED SLOPES SHOULD BE PROTECTED FROM EROSION, AS NECESSARY, AS SOON AS PRACTICAL AFTER THE COMPLETION OF THE SITE GRADING.
3. THE SITE CAN BE CLASSIFIED AS SITE CLASS C, "VERY DENSE SOIL AND SOFT ROCK" UNDER THE 2006 INTERNATIONAL BUILDING CODE (IBC).

SITE GRADING:

1. ONCE THE SITE HAS BEEN PROPERLY PREPARED, GRADING OPERATIONS MAY BEGIN TO GENERATE THE DESIGN FINISH GRADES. THE LEVEL BUILDING PADS FOR THE DWELLINGS SHOULD BE DESIGNED SUCH THAT THEIR TOP OF SLOPE EXTENDS AT LEAST 5 FEET BEYOND EDGE OF THE DWELLINGS, THEIR FOUNDATIONS, LANAIS AND SIMILAR STRUCTURAL ATTACHMENTS. WHERE THIS CRITERIA CANNOT BE MET, DEEPER THAN NORMAL FOUNDATIONS OR DEEPENED THICKENED EDGE SLABS SHOULD BE ANTICIPATED.
2. EXCEPT FOR ITS WESTERNMOST ROW OF LOTS, ADJACENT TO KEANALEHU DRIVE, THE SUBSURFACE INVESTIGATION INDICATES THAT THE AKAU SUBDIVISION IS GENERALLY UNDERLAIN BY AT LEAST 2 FEET OF 2"- OR 3"-MINUS GRANULAR CAPPING FILL. LOT NOS. 1 THROUGH 18 OF THE AKAU SUBDIVISION WILL REQUIRE EITHER THE PLACEMENT OF UP TO 2 FEET OF ADDITIONAL, 2"-MINUS GRANULAR CAPPING FILL. SINCE THESE LOTS APPEAR TO BE BELOW THEIR PLANNED FINISH SUBGRADE LEVEL, THE PLACEMENT OF 2 FEET OF CAPPING FILL MATERIAL SHOULD NOT RESULT IN ANY REMEDIAL EXCAVATIONS TO ALLOW PLACEMENT OF THE CAPPING FILL MATERIAL.
3. THE INVESTIGATION INDICATES THAT THE MAJORITY OF THE LOTS OF THE HEMA SUBDIVISION ARE UNDERLAIN BY LESS THAN 2 FEET OF CAPPING FILL MATERIAL, AND ON MANY LOTS NO CAPPING MATERIAL AT ALL. WHERE LESS THAN 2 FEET OF FILL IS PLANNED WITHIN THE HEMA SUBDIVISION LOTS, THE CURRENT EXPOSED SUBGRADE SHOULD BE OVEREXCAVATED SUFFICIENTLY TO ALLOW THE PLACEMENT OF AT LEAST 2 FEET OF 2"-MINUS CAPPING FILL ON THE LOTS AND ROADWAYS.
4. AFTER THE SITE HAS BEEN CLEARED AND GRUBBED, WHERE THE EXPOSED SUBGRADE CONSISTS OF THE CAPPING FILL MATERIAL, IT SHOULD BE PROOF-ROLLED WITH AT LEAST 5 PASSES OF A HEAVY, VIBRATORY SMOOTH DRUM COMPACTOR WEIGHING AT LEAST 10 TONS, TO DENSIFY THE NEAR-SURFACE FILL. ANY LOOSE SPOTS ENCOUNTERED SHOULD BE REMOVED DOWN TO PROPERLY COMPACTED FILL OR INTACT BASALT AND THE RESULTING DEPRESSION BACKFILLED IN ACCORDANCE WITH THESE RECOMMENDATIONS.
5. WHERE THE THEN EXPOSED SUBGRADE CONSISTS OF EITHER INTACT BASALT OR COARSE ROCK FILL, IT SHOULD BE TRACK-ROLLED WITH AT LEAST 7 PASSES OF A LARGE DOZER SUCH AS A D-8 DOZER, OR LARGER, TO DENSIFY ANY NEAR-SURFACE LOOSE CLINKER POCKETS, AND TO DETECT ANY NEAR-SURFACE VOIDS, LAVA TUBES, SOFT SPOTS, OR OTHER DEFECTS IN THE ROCK. THIS CONDITION IS LIKELY LIMITED TO THE SOUTHERN HALF OF THE HEMA SUBDIVISION.
6. SITE EXCAVATIONS TO PROVIDE A SUFFICIENT THICKNESS OF THE 2"-MINUS CAPPING FILL, WILL LIKELY ENCOUNTER EITHER COARSE ROCK FILL OR INTACT BASALT WHICH WILL REQUIRE THE USE OF HEAVY ROCK-EXCAVATING EQUIPMENT. IT IS ANTICIPATED THAT THE PREDOMINANT EXCAVATED MATERIAL WILL BE BOULDER-SIZED FRAGMENTS OF UP TO 2 TO 3 FEET IN DIAMETER, WHICH MUST BE SEGREGATED, PROCESSED AND CRUSHED FOR USE AS CAPPING FILL OR UTILITY BACKFILL.
7. FILLS AND BACKFILLS, WHETHER IMPORTED OR MANUFACTURED ON-SITE, USED WITHIN DEPTHS OF 2 FEET OF THE FINISH SUBGRADE LEVEL OF THE LOTS OR ROADWAYS SHOULD BE RELATIVELY WELL-GRADED, AND SHOULD HAVE A MAXIMUM SIZE OF NO MORE THAN 2 INCHES (2"-MINUS CRUSHED ROCK MATERIAL). IT SHOULD ALSO EXHIBIT A CBR OF AT LEAST 25 WITH NO MORE THAN 1 PERCENT SWELL, WHEN TESTED IN ACCORDANCE WITH ASTM D1883 UNDER A 51 P.S.F. SURCHARGE. LARGER WELL-GRADED 6"-MINUS CRUSHED ROCK FILL AND BACKFILL MAY BE USED BELOW DEPTHS OF 2 FEET BELOW THE FINISH SUBGRADE LEVELS OF FUTURE STRUCTURES OR ROADWAYS.
8. THE 2"-MINUS FINE-GRAINED FILL AND BACKFILL SHOULD BE PLACED IN LEVEL LIFTS OF NO MORE THAN 8 INCHES IN LOOSE THICKNESS, MOISTURE-CONDITIONED TO WITHIN 3 PERCENT OF THEIR OPTIMUM MOISTURE CONTENT AND UNIFORMLY COMPACTED TO AT LEAST 90 PERCENT RELATIVE COMPACTION AS DETERMINED BY LABORATORY COMPACTION TEST ASTM D1557. FILL PLACED WITHIN 2 FEET OF THE FINISHED SUBGRADES WITHIN THE STREET RIGHT-OF-WAYS SHOULD BE COMPACTED TO AT LEAST 95 PERCENT RELATIVE COMPACTION.
9. THE 6"-MINUS SHOULD BE PLACED IN LEVEL LIFTS OF NO MORE THAN 8 INCHES IN LOOSE THICKNESS AND COMPACTED INTO A DENSE, UNYELDING LAYER. FIELD DENSITY TESTING OF FILLS CONSISTING OF THE MINUS 6"- INCH CRUSHED ROCK MATERIAL IS NOT PRACTICAL DUE TO THE LARGE ROCK SIZES AND MUST BE VISUALLY MONITORED. COMPACTION OF THE MINUS 6-INCH CRUSHED ROCK SHOULD BE ACCOMPLISHED BY CONTRACTORS EXPERIENCED IN ROCK FILL CONSTRUCTION AND SHOULD BE OBSERVED FULL-TIME BY FGE TO DETERMINE WHETHER THE FILL HAS BEEN COMPACTED IN ACCORDANCE WITH THE RECOMMENDATIONS HEREIN.
10. FILL SLOPES SHOULD BE LATERALLY OVER-CONSTRUCTED DURING THE MASS GRADING AND SUBSEQUENTLY TRIMMED BACK TO THE PLANNED FINISHED GRADES, SUCH THAT THE FINISH SLOPE FACE CONSISTS OF A TIGHT, WELL-COMPACTED SURFACE. WHERE COARSE ROCK FILLS HAVE BEEN USED FOR THE SITE GRADING, ANY LOOSE BOULDERS ON THE SLOPE FACE SHOULD BE REMOVED AND THE SLOPES SHOULD BE TRACKED TO FORM A TIGHT FACE. THE USE OF ADDITIONAL MINUS 6-INCH CRUSHED ROCK SHOULD BE ANTICIPATED TO FINE GRADE THE COARSE ROCK FILL SLOPES.
11. NEW FILL SLOPES WITHIN THE SUBDIVISIONS MAY BE CONSTRUCTED AS STEEP AS 1-1/2H:1V FOR HEIGHTS OF UP TO 4 FEET WITHOUT BENCHES. NEW SLOPES EXCEEDING THIS HEIGHT ARE NOT ANTICIPATED AT THIS TIME AND SHOULD BE INDIVIDUALLY EVALUATED, SHOULD THEY OCCUR. CUT SLOPES IN THE EXISTING FILLS OF THE SUBDIVISIONS SHOULD BE SLOPED NO STEEPER THAN 2H:1V.
12. OUR OBSERVATIONS OF THE EXISTING SLOPES SURROUNDING THE AKAU SUBDIVISION PARK SITE INDICATE THAT THEY ARE UNDERLAIN BY UP TO ABOUT 6 FEET OF FILL OVER INTACT BASALT INTERBEDDED WITH THIN SEAMS OF AA CLINKER. WE BELIEVE THAT PERMANENT CUT SLOPES WITHIN THE EXISTING FILLS MAY BE SLOPED AS STEEP AS 1-1/2H:1V FOR SLOPE HEIGHTS OF UP TO 15 FEET. CUTS WITHIN THE INTACT BASALT AND CLINKER MAY BE SLOPED AS STEEP AS 1-1/2H:1V FOR HEIGHTS OF UP TO 20 FEET.
13. THE ABOVE-RECOMMENDED SLOPE INCLINATIONS SHOULD BE ADEQUATELY STABLE, BUT THE SURFACE WILL BE SUBJECT TO RAVELING. SHOULD LOOSE POCKETS IN THE EXISTING FILLS, OR DEFECTS IN THE ROCK BE OBSERVED DURING CONSTRUCTION, FGE SHOULD BE NOTIFIED SUCH THAT ADDITIONAL RECOMMENDATIONS CAN BE PROVIDED. THE REMEDIAL MEASURES WHERE THIS OCCURS WILL DEPEND ON THE ACTUAL CONDITION OF THE FORMATION, BUT MAY INCLUDE GUNITING OF OCCASIONAL DEEP CLINKER LAYERS TO MINIMIZE RAVELING AND SUBSEQUENT UNDERMINING OF THE SLOPE.

PAVEMENTS:

1. PROVIDED THE GRADING RECOMMENDATIONS HAVE BEEN FOLLOWED, THE ROAD SUBGRADES WILL CONSIST OF FINE-GRAINED, RELATIVELY WELL-GRADED GRANULAR MATERIALS WITH A CBR OF AT LEAST 25 AND LESS THAN 1 PERCENT SWELL. FOR THIS CONDITION AND THE ANTICIPATED LIGHT RESIDENTIAL TRAFFIC, WE BELIEVE THAT A MINIMUM PAVEMENT SECTION CONSISTING OF 2 INCHES OF ASPHALT CONCRETE PAVING, OVER 6 INCHES OF AGGREGATE BASE COURSE, PLACED OVER COMPACTED SUBGRADES SHOULD BE SUFFICIENT.
2. THE COMPOSITION AND PLACEMENT OF THE AGGREGATE BASE COURSE SHOULD CONFORM TO SECTION 703.06 OF THE STANDARD SPECIFICATIONS. THE BASE COURSE SHOULD BE COMPACTED TO AT LEAST 95 PERCENT RELATIVE COMPACTION.
3. THE ROAD SUBGRADE SHOULD BE SHAPED TO DRAIN TO PRECLUDE THE PONDING OF WATER ADJACENT TO OR BENEATH THE PAVEMENTS, AND SHOULD SIMILARLY BE COMPACTED TO AT LEAST 95 PERCENT RELATIVE COMPACTION FOR A MINIMUM OF 6 INCHES PRIOR TO THE PLACEMENT OF THE AGGREGATE BASE COURSE.
4. THE ABOVE PAVEMENT SECTION IS RECOMMENDED FOR PRELIMINARY DESIGN PURPOSES AND SHOULD BE VERIFIED BY CBR TESTS ON THE ACTUAL SUBGRADE MATERIALS DURING CONSTRUCTION.

QUALITY CONTROL:

1. THE SITE PREPARATION AND SITE GRADING, INCLUDING THE PROOF-ROLLING AND TRACK ROLLING OPERATIONS, SHOULD BE OBSERVED BY FGE TO VERIFY THAT THE ANTICIPATED SUBSURFACE CONDITIONS HAVE BEEN ENCOUNTERED.
2. SAMPLES OF THE PROPOSED FILL MATERIALS SHOULD BE SUBMITTED TO FGE NO LESS THAN 7 WORKING DAYS PRIOR TO ITS INTENDED JOB-SITE DELIVERY TO ALLOW ADEQUATE TIME FOR TESTING, EVALUATION, AND APPROVAL.
3. INTERMITTENT FIELD DENSITY TESTS SHOULD BE TAKEN TO DETERMINE WHETHER THE SPECIFIED LEVELS OF COMPACTION ARE CONSISTENTLY OBTAINED IN THE FINER-GRAINED FILLS AND BACKFILLS. FIELD DENSITY TESTING OF THE MINUS 6-INCH CRUSHED ROCK FILL AND COARSE ROCK FILL IS NOT FEASIBLE, AND THE CONSTRUCTION OF THESE LAYERS SHOULD BE VISUALLY MONITORED ON A FULL-TIME BASIS BY FGE.
4. FOUNDATION EXCAVATIONS SHOULD BE OBSERVED BY FGE PRIOR TO THE PLACEMENT OF REINFORCING STEEL TO DETERMINE WHETHER THE ANTICIPATED BEARING MATERIALS HAVE BEEN ENCOUNTERED. THE RECOMMENDATIONS PROVIDED HEREIN ARE CONTINGENT ON ADEQUATE MONITORING OF THE GEOTECHNICAL PHASES OF THE CONSTRUCTION BY FGE.

CONCRETE SLABS-ON-GRADE:

1. CONCRETE SLABS-ON-GRADE MAY BE USED PROVIDED THE GRADING RECOMMENDATIONS HAVE BEEN FOLLOWED. THIS WILL ASSURE THAT THE SUBGRADES FOR THE SLABS CONSIST OF AT LEAST 2 FEET OF 2"-MINUS CRUSHED ROCK FILL MATERIAL COMPACTED TO AT LEAST 90 PERCENT RELATIVE COMPACTION.
2. CONCRETE SLABS-ON-GRADE SHOULD BE UNDERLAIN BY AT LEAST 4 INCHES OF ASTM D448 NO. 6 AGGREGATE TO PROVIDE A CAPILLARY BREAK BETWEEN THE BOTTOM OF THE SLAB AND THE SUBGRADE MATERIALS. IF A VAPOR BARRIER IS DESIRABLE, IT SHOULD BE INSTALLED IN ACCORDANCE WITH THE RECOMMENDATIONS OF THE PROJECT STRUCTURAL ENGINEER.
3. EXTERIOR CONCRETE SLABS ON GRADES WHICH ARE SUBJECTED TO VEHICULAR TRAFFIC, SHOULD BE UNDERLAIN BY AT LEAST 6 INCHES OF AGGREGATE SUBBASE OR 4 INCHES OF AGGREGATE BASE COURSE COMPACTED TO AT LEAST 95 PERCENT RELATIVE COMPACTION. THE AGGREGATE SUBBASE AND AGGREGATE BASE COURSE SHOULD CONFORM TO SECTIONS 703.17 AND 703.06, RESPECTIVELY, OF THE STANDARD SPECIFICATIONS.
4. STEEL REINFORCING OF THE CONCRETE SLABS-ON-GRADES SHOULD BE PROVIDED AS RECOMMENDED BY THE PROJECT STRUCTURAL ENGINEER. DIFFERENTIAL SETTLEMENT EXCEEDING 1/4 INCH BETWEEN THE CONCRETE SLABS-ON-GRADES AND THE FOUNDATIONS ARE NOT ANTICIPATED UNDER THE ASSUMED COLUMN AND WALL LOADS.

ESTIMATED EARTHWORK QUANTITIES

EXCAVATION = 4400 C.Y.
EMBANKMENT = 0 C.Y.

LEGEND:

- SWALES
- DIRECTION OF FLOW
- F431.40 FINISH GRADE
- 420 FINISH CONTOUR
- E418.88 EXIST. GRADE
- 405 EXIST. CONTOUR

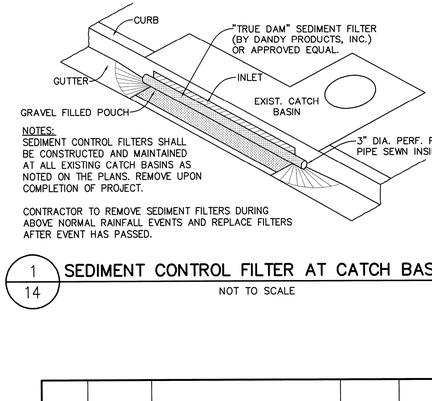

NOTES:
SEDIMENT CONTROL FILTERS SHALL BE CONSTRUCTED AND MAINTAINED AT ALL EXISTING CATCH BASINS AS NOTED ON THE PLANS. REMOVE UPON COMPLETION OF PROJECT.

CONTRACTOR TO REMOVE SEDIMENT FILTERS DURING ABOVE NORMAL RAINFALL EVENTS AND REPLACE FILTERS AFTER EVENT HAS PASSED.

1/14 SEDIMENT CONTROL FILTER AT CATCH BASIN
NOT TO SCALE

40 20 0 40 80
Graphic Scale in Feet

ERIC N. S. HEE
LICENSED PROFESSIONAL ENGINEER
No. 5292-C
HAWAII, U.S.A.

THIS WORK WAS PREPARED BY ME OR UNDER MY SUPERVISION AND CONSTRUCTION OF THIS PROJECT WILL BE UNDER MY OBSERVATION. ("OBSERVATION OF CONSTRUCTION" SHALL BE AS DEFINED IN CHAPTER 115, RULES OF THE BOARD OF PROFESSIONAL ENGINEERS, ARCHITECTS AND SURVEYORS, STATE OF HAWAII, SUBCHAPTER 1, SECTION 16-115-2, DEFINITIONS, EFFECTIVE 08/29/94).

Engineers Surveyors Hawaii, Inc.
(Lic. Exp 4-30-2014)

REVISION	DATE	DESCRIPTION	MADE BY	APPROVED

DEPARTMENT OF HAWAIIAN HOME LANDS
LA'I'OPUA VILLAGE 4
PHASE 1 – 'AKAU
TAX MAP KEY: (3) 7-4-21:10 & POR. 12
KAILUA-KONA, NORTH KONA, HAWAII

GRADING PLAN FOR LOTS 1 TO 18 INCLUSIVE & SOIL RECOMMENDATIONS

Approved:

COUNTY ENGINEER, DPW, COUNTY OF HAWAII — DATE

ENGINEERS SURVEYORS HAWAII, INC.
1320 NORTH SCHOOL ST.
HONOLULU, HAWAII 96817

FILE	POCKET	FOLDER	NO.

SHEET 16 OF 46 SHEETS

Initials Z:\Engineering\Projects\2009\59-026 Laiopua Village-4\Working Folder\16 - 59-026 Grading Lots 1-18 Sht 14.dwg 10:50am - Fri, 03/29/13

LOT 70 ESTIMATED EARTHWORK QUANTITIES

EXCAVATION = 210 C.Y.
EMBANKMENT = 120 C.Y.
AREA TO BE GRADED/DISTURBED = 0.30 AC.

LEGEND:

- SWALES
- DIRECTION OF FLOW (EXISTING)
- DIRECTION OF FLOW (Finished)
- F418.2 FINISH GRADE
- 384.3 EXIST. GRADE
- --405-- EXIST. CONTOUR
- EXIST. CHAIN LINK FENCING

TRUE NORTH
SCALE: 1"=10'

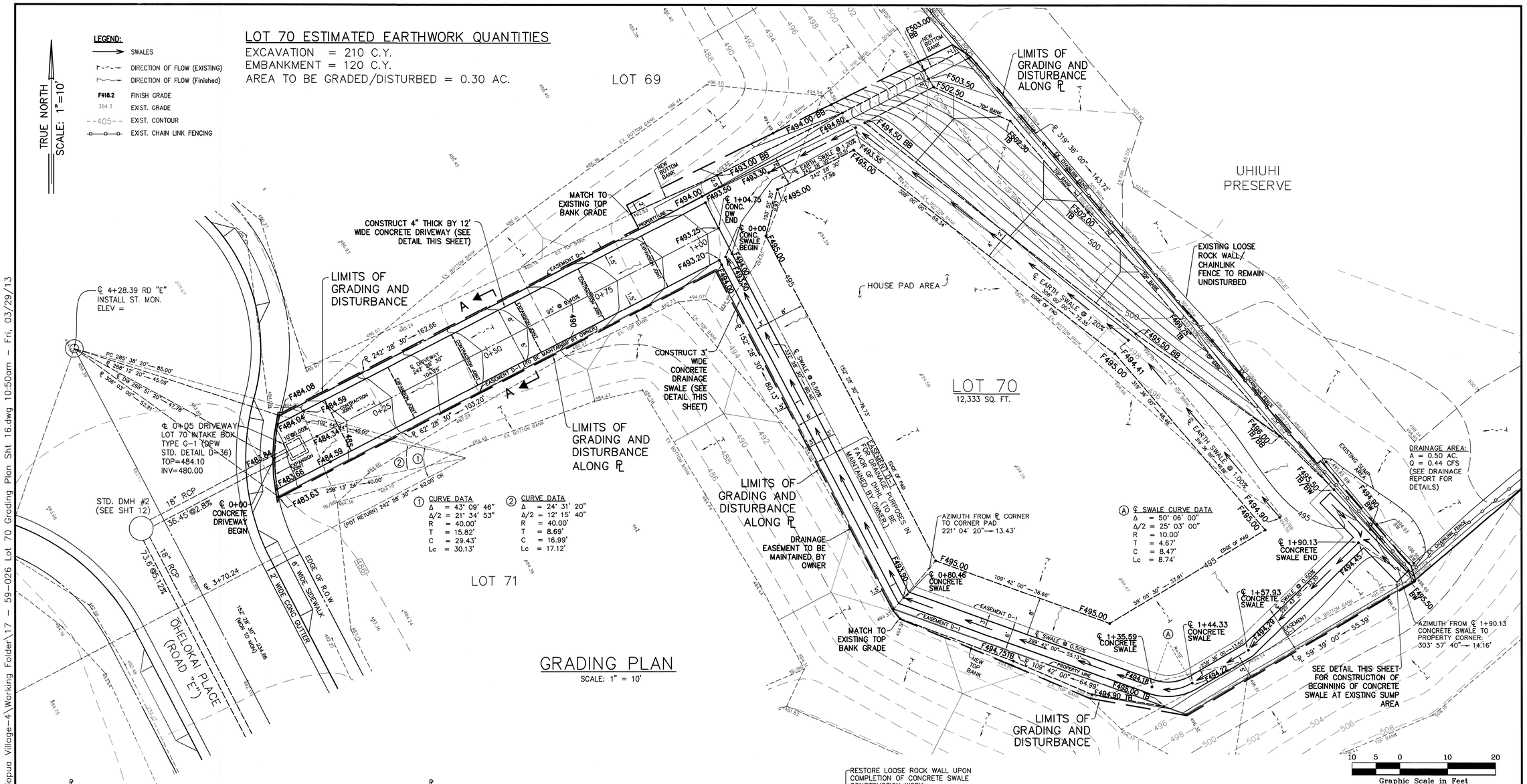

① CURVE DATA
Δ = 43° 09' 46"
Δ/2 = 21° 34' 53"
R = 40.00'
T = 15.82'
C = 29.43'
Lc = 30.13'

② CURVE DATA
Δ = 24° 31' 20"
Δ/2 = 12° 15' 40"
R = 40.00'
T = 8.69'
C = 16.99'
Lc = 17.12'

Ⓐ ℄ SWALE CURVE DATA
Δ = 50° 06' 00"
Δ/2 = 25° 03' 00"
R = 10.00'
T = 4.67'
C = 8.47'
Lc = 8.74'

GRADING PLAN

SCALE: 1" = 10'

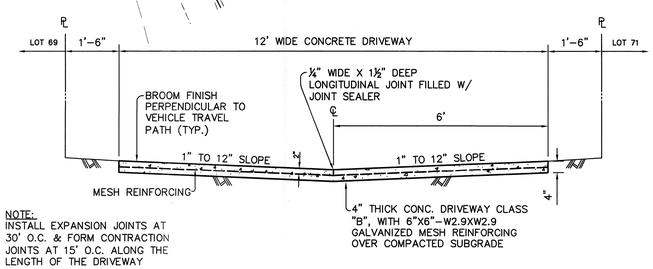

NOTE:
INSTALL EXPANSION JOINTS AT 30' O.C. & FORM CONTRACTION JOINTS AT 15' O.C. ALONG THE LENGTH OF THE DRIVEWAY

SECTION A–A

SCALE: ½" = 1'

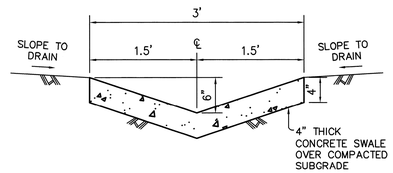

TYPICAL CONCRETE DRAINAGE SWALE

SCALE: 1" = 1'-0"

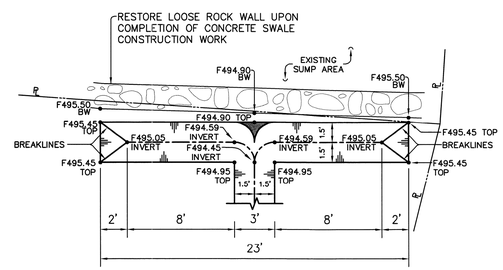

CONCRETE SWALE AT EXISTING SUMP AREA

SCALE: 3/16" = 1'-0"

ERIC N. S. HEE
LICENSED PROFESSIONAL ENGINEER
No. 5292-C
HAWAII, U.S.A.

THIS WORK WAS PREPARED BY ME OR UNDER MY SUPERVISION AND CONSTRUCTION OF THIS PROJECT WILL BE UNDER MY OBSERVATION. ("OBSERVATION OF CONSTRUCTION" SHALL BE AS DEFINED IN CHAPTER 115, RULES OF THE BOARD OF PROFESSIONAL ENGINEERS, ARCHITECTS AND SURVEYORS, STATE OF HAWAII, SUBCHAPTER 1, SECTION 16-115-2, DEFINITIONS, EFFECTIVE 08/29/94).

Engineers Surveyors Hawaii, Inc.
(Lic. Exp 4-30-2014)

REVISION	DATE	DESCRIPTION	MADE BY	APPROVED

DEPARTMENT OF HAWAIIAN HOME LANDS
LA'I'ŌPUA VILLAGE 4
PHASE 1 – 'ĀKAU
TAX MAP KEY: (3) 7-4-21:10 & POR. 12
KAILUA-KONA, NORTH KONA, HAWAII

LOT GRADING PLAN FOR LOT 70 (INCLUDING CONCRETE DRIVEWAY & CONCRETE DRAINAGE SWALE)

Approved:

COUNTY ENGINEER, DPW, COUNTY OF HAWAII — DATE

ENGINEERS SURVEYORS HAWAII, INC.
1320 NORTH SCHOOL ST.
HONOLULU, HAWAII 96817

FILE	POCKET	FOLDER	NO.

Initials Z:\Engineering\Projects\2009\59-026 Laiopua Village-4\Working Folder\17 – 59-026 Lot 70 Grading Plan Sht 16.dwg 10:50am – Fri, 03/29/13

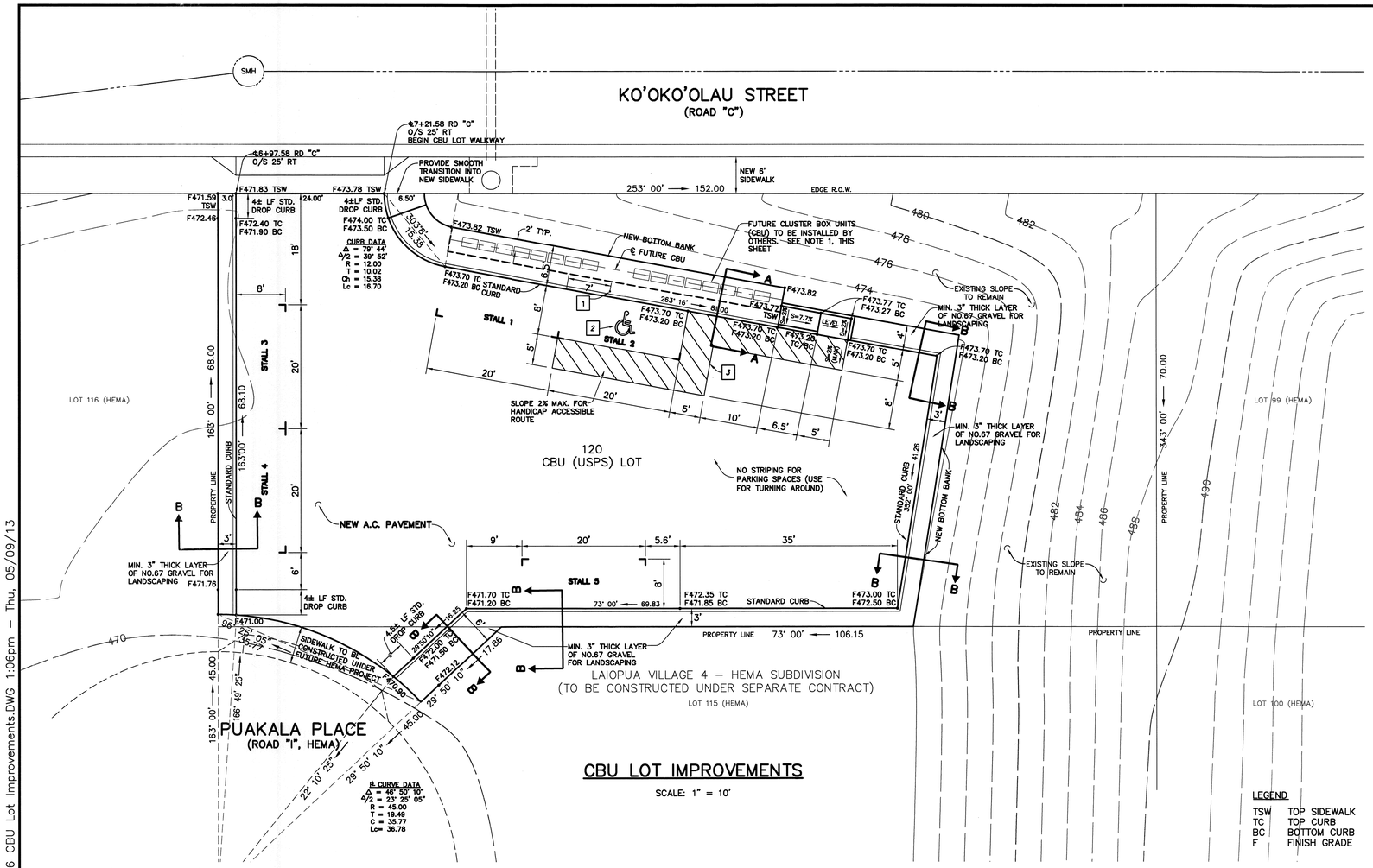

CBU LOT IMPROVEMENTS

SCALE: 1" = 10'

LEGEND

TSW	TOP SIDEWALK
TC	TOP CURB
BC	BOTTOM CURB
F	FINISH GRADE

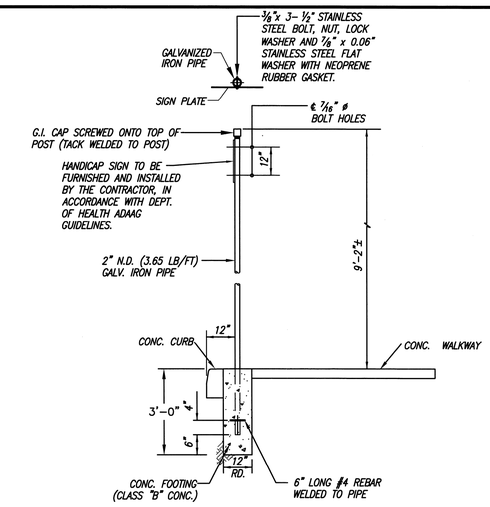

TYPICAL SIGN POST AND MOUNTING DETAIL

NOT TO SCALE

KEYNOTE

1. INSTALL NEW "ACCESSIBLE PARKING SIGN" AND POST. ACCESSIBLE SIGN PER STATE DEPARTMENT OF HEALTH REGLATIONS (18"X12")
2. PAINT ACCESSIBLE PARKING STALL LOGO
3. PAINT 5'-0" WIDE ACCESS AISLE. 4-INCH WHITE STRIPES AT 45° ANGLE TO PARKING SPACE

NOTE

1. CBU TO BE INSTALLED BY OTHERS IN THE FUTURE. SIZE OF CONCRETE SLAB IS BASED ON FUTURE BUILD OUT OF LAIOPUA VILLAGE 4 AKAU (117 RESIDENTIAL UNITS) AND HEMA (125 RESIDENTIAL UNITS) FOR TOTAL OF 242 RESIDENTIAL UNITS, AND USING 16-BOX CBU'S. THEREFORE, TOTAL FOR AKAU AND HEMA WILL REQUIRE 16 CBU'S WITH 16 BOXES PER CBU (8 CBU FOR AKAU AND 8 CBU FOR HEMA).

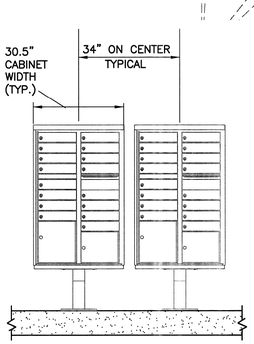

ELEVATION

SCALE: 1/2" = 1'-0"

CBU NOTES

1. CLUSTER BOX UNITS (CBU) AND PEDESTALS ARE TO BE FURNISHED AND INSTALLED BY OTHERS. INFORMATION ON CBU IS PROVIDED TO ASSIST AGENCIES IN REVIEW OF THIS PROJECT FOR CONFORMANCE TO REGULATIONS.
2. CBU AND PEDESTALS SHALL BE BY AUTH-FLORENCE MANUFACTURING OR USPS APPROVED EQUAL.

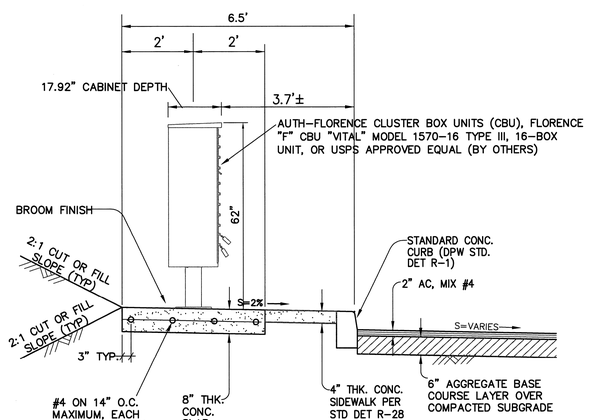

SECTION A–A

SCALE: 1/2" = 1'-0"

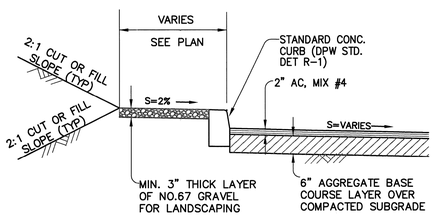

SECTION B–B

SCALE: 1/2" = 1'-0"

10 5 0 10 20
Graphic Scale in Feet

REVISION	DATE	DESCRIPTION	MADE BY	APPROVED

ERIC N. S. HEE
LICENSED PROFESSIONAL ENGINEER
No. 5292-C
HAWAII, U.S.A.

THIS WORK WAS PREPARED BY ME OR UNDER MY SUPERVISION AND CONSTRUCTION OF THIS PROJECT WILL BE UNDER MY OBSERVATION. ("OBSERVATION OF CONSTRUCTION" SHALL BE AS DEFINED IN CHAPTER 115, RULES OF THE BOARD OF PROFESSIONAL ENGINEERS, ARCHITECTS AND SURVEYORS, STATE OF HAWAII, SUBCHAPTER 1, SECTION 16-115-2, DEFINITIONS, EFFECTIVE 08/29/94).

Eric N. S. Hee
Engineers Surveyors Hawaii, Inc.
(Lic. Exp 4-30-2014)

DEPARTMENT OF HAWAIIAN HOME LANDS
LA'I'OPUA VILLAGE 4
PHASE 1 – 'AKAU
TAX MAP KEY: (3) 7-4-21:10 & POR. 12
KAILUA-KONA, NORTH KONA, HAWAII

IMPROVEMENT PLAN
FOR CBU LOT

Approved:

COUNTY ENGINEER, DPW, COUNTY OF HAWAII — DATE

ENGINEERS SURVEYORS HAWAII, INC.
1320 NORTH SCHOOL ST.
HONOLULU, HAWAII 96817

SHEET 18 OF 46 SHEETS

FILE	POCKET	FOLDER	NO.

Initials Y:\2009\59-026 Laiopua Village-4\Working Folder\18 - 59-026 CBU Lot Improvements.DWG 1:06pm – Thu, 05/09/13

Y:\2009\59-026 Laiopua Village-4\Working Folder\18 - 59-026 CBU Lot Improvements.DWG, 10 Scale, 5/9/2013 1:06:55 PM, 1:1

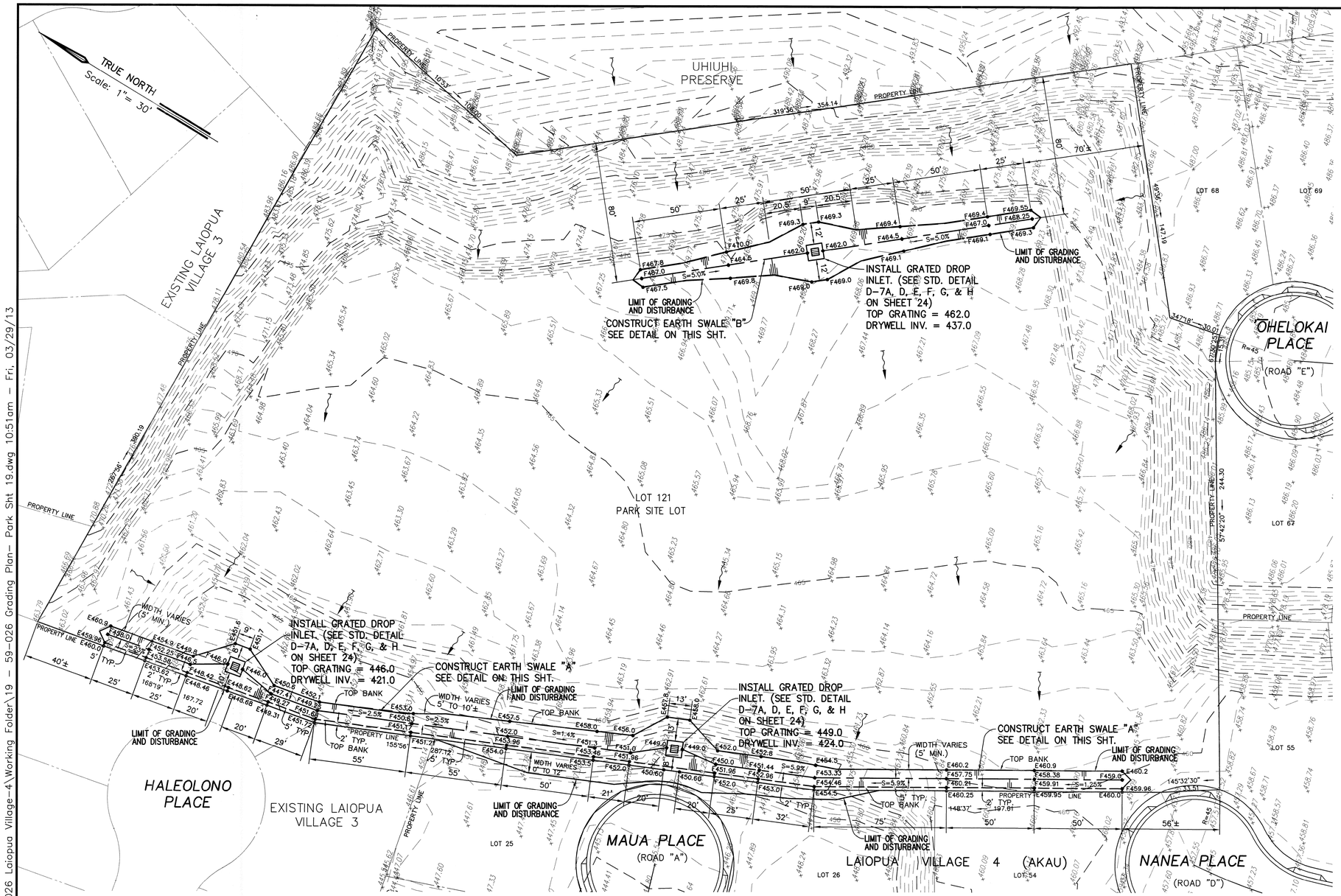

GRADING PLAN

SCALE: 1" = 30'

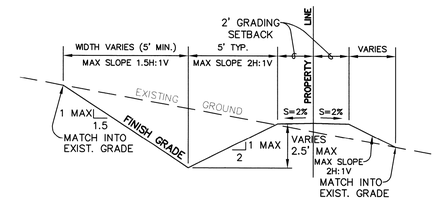

TYPICAL DETAIL – EARTH SWALE "A"

SCALE: 1/4" = 1'-0"

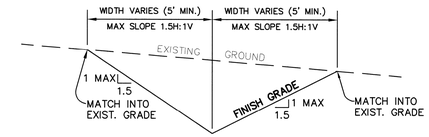

TYPICAL DETAIL – EARTH SWALE "B"

SCALE: 1/4" = 1'-0"

ESTIMATED EARTHWORK QUANTITIES
EXCAVATION = 780 C.Y.
EMBANKMENT = 110 C.Y.

LEGEND:
- SWALES
- DIRECTION OF FLOW
- F431.40 FINISH GRADE
- E418.88 EXIST. GRADE
- 405 EXIST. CONTOUR

10 5 0 10 20
Graphic Scale in Feet

ERIC N. S. HEE
LICENSED PROFESSIONAL ENGINEER
No. 5292-C
HAWAII, U.S.A.

THIS WORK WAS PREPARED BY ME OR UNDER MY SUPERVISION AND CONSTRUCTION OF THIS PROJECT WILL BE UNDER MY OBSERVATION. ("OBSERVATION OF CONSTRUCTION" SHALL BE AS DEFINED IN CHAPTER 115, RULES OF THE BOARD OF PROFESSIONAL ENGINEERS, ARCHITECTS AND SURVEYORS, STATE OF HAWAII, SUBCHAPTER 1, SECTION 16-115-2, DEFINITIONS, EFFECTIVE 08/29/94).

Eric N. S. Hee

Engineers Surveyors Hawaii, Inc.
(Lic. Exp 4-30-2014)

REVISION	DATE	DESCRIPTION	MADE BY	APPROVED

DEPARTMENT OF HAWAIIAN HOME LANDS
LA'I'ŌPUA VILLAGE 4
PHASE 1 – 'ĀKAU
TAX MAP KEY: (3) 7-4-21:10 & POR. 12
KAILUA-KONA, NORTH KONA, HAWAII

PARK SITE DRAINAGE PLAN

Approved:

COUNTY ENGINEER, DPW, COUNTY OF HAWAII DATE

ENGINEERS SURVEYORS HAWAII, INC.
1320 NORTH SCHOOL ST.
HONOLULU, HAWAII 96817

FILE	POCKET	FOLDER	NO.

Initials Z:\Engineering\Projects\2009\59-026 Laiopua Village-4\Working Folder\19 - 59-026 Grading Plan- Park Sht 19.dwg 10:51am - Fri, 03/29/13

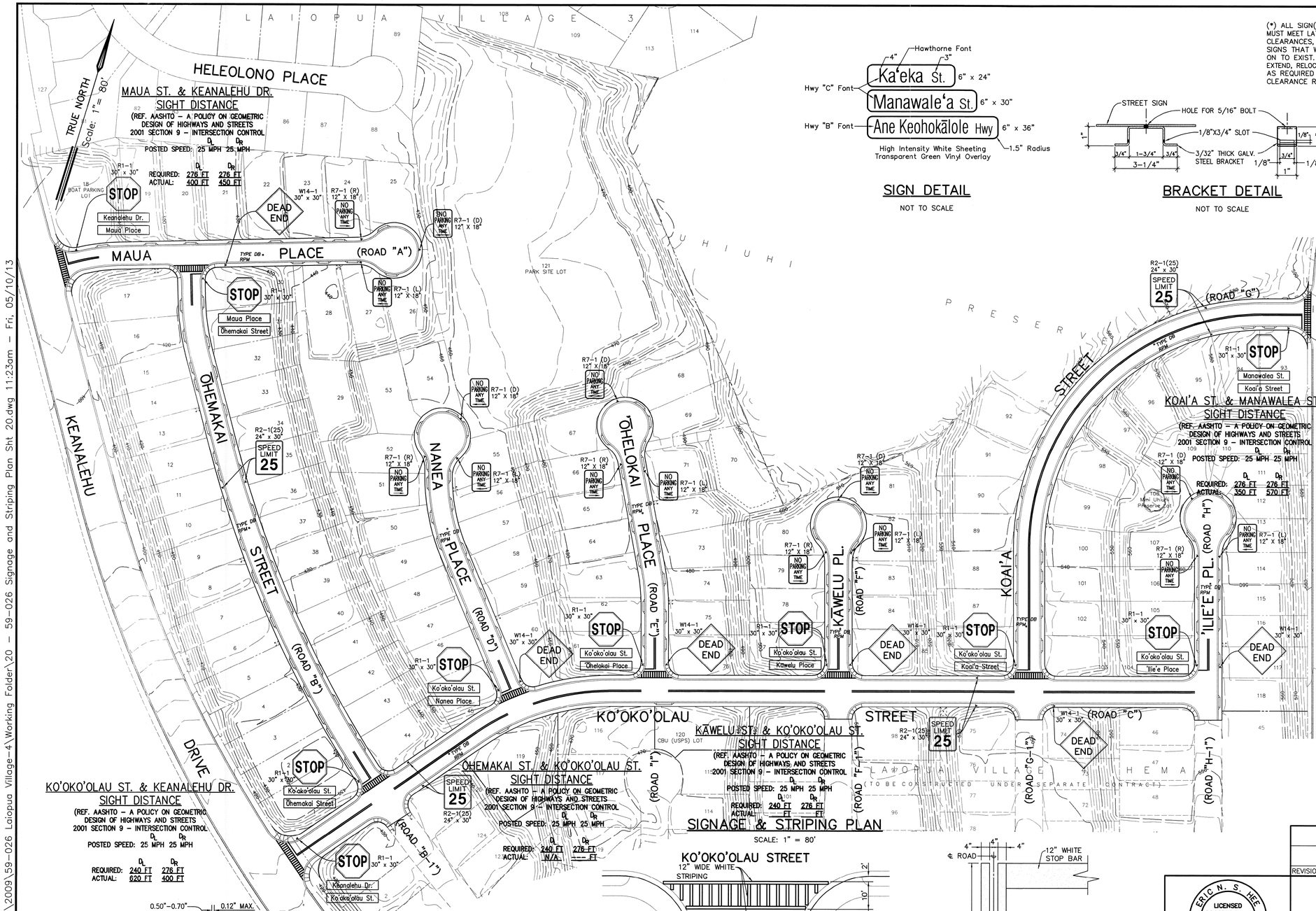

Graphic Scale in Feet

(*) ALL SIGN(S) INSTALLATIONS MUST MEET LATERAL AND HEIGHT CLEARANCES, INCLUDING NEW SIGNS THAT WILL BE POSTED ON TO EXIST. SIGN POSTS. EXTEND, RELOCATE OR REPLACE AS REQUIRED TO MEET CLEARANCE REQUIREMENTS.

SIGN DETAIL

NOT TO SCALE

BRACKET DETAIL

NOT TO SCALE

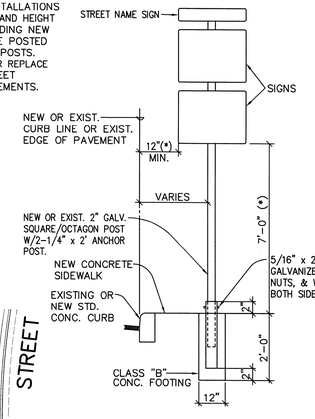

INSTALLATION OF NEW OR RELOCATED SIGN POST

NOT TO SCALE

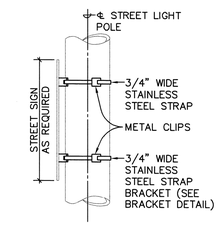

STRAP MOUNTING DETAIL

NOT TO SCALE

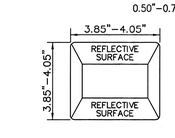

TYPE "DB" TWO-WAY BLUE REFLECTIVE STANDARD RAISED PAVEMENT MARKER

NOT TO SCALE

1. INSTALL "STREET NAME" SIGN CENTER OF CURB RETURN OR ON MAIN STREET SIDE OF WHEEL CHAIR RAMP.
2. LOCATION OF STOP SIGN.
   A. INSTALL "STOP" SIGN AT CURB RETURN TANGENT POINT.
   B. INSTALL "STOP" SIGN ON METAL STREET LIGHT STANDARD. IF THE LIGHT STANDARD IS LOCATED WITHIN 10' OF CURB RETURN.
3. THE STREET NAME SIGNS ARE TO BE UPPER CASE FIRST LETTER/ LOWER CASE FORMAT WITH PROPER HAWAIIAN SPELLING PER PLANNING DEPARTMENT.

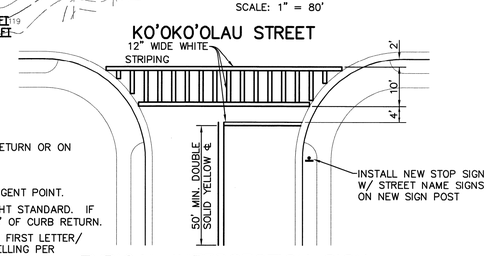

TYPICAL INTERSECTION SIGN AND PAVEMENT MARKINGS

NOT TO SCALE

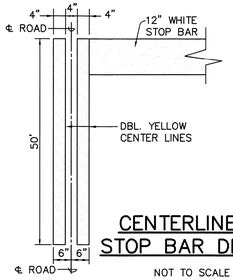

CENTERLINE & STOP BAR DETAIL

NOT TO SCALE

REVISION	DATE	DESCRIPTION	MADE BY	APPROVED

ERIC N. S. HEE
LICENSED PROFESSIONAL ENGINEER
No. 5292-C
HAWAII, U.S.A.

THIS WORK WAS PREPARED BY ME OR UNDER MY SUPERVISION AND CONSTRUCTION OF THIS PROJECT WILL BE UNDER MY OBSERVATION. ("OBSERVATION OF CONSTRUCTION" SHALL BE AS DEFINED IN CHAPTER 115, RULES OF THE BOARD OF PROFESSIONAL ENGINEERS, ARCHITECTS AND SURVEYORS, STATE OF HAWAII, SUBCHAPTER 1, SECTION 16-115-2, DEFINITIONS, EFFECTIVE 08/29/94).

Eric N. S. Hee
Engineers Surveyors Hawaii, Inc.
(Lic. Exp 4-30-2014)

DEPARTMENT OF HAWAIIAN HOME LANDS
LA'I'ŌPUA VILLAGE 4
PHASE 1 – 'ĀKAU
TAX MAP KEY: (3) 7-4-21:10 & POR. 12
KAILUA-KONA, NORTH KONA, HAWAII

SIGNAGE & STRIPING PLAN

Approved:

COUNTY ENGINEER, DPW, COUNTY OF HAWAII DATE

ENGINEERS SURVEYORS HAWAII, INC.
1320 NORTH SCHOOL ST.
HONOLULU, HAWAII 96817

FILE	POCKET	FOLDER	NO.

Initials Z:\Engineering\Projects\2009\59-026 Laiopua Village-4\Working Folder\20 – 59-026 Signage and Striping Plan Sht 20.dwg 11:23am – Fri, 05/10/13

NOTES:

1. CW20-1Ad SIGN REQUIRED FOR POSTED SPEED LIMIT OF 45 M.P.H. OR GREATER.
2. SEE TABLE 1 FOR ADDITIONAL DIMENSIONS.
3. ONE LANE ROAD (CW20-4) AND FLAGGER AHEAD (CW20-7) SIGNS SHALL BE REMOVED OR COVERED WHEN NO WORK IS BEING PERFORMED AND LANE IS NOT CLOSED.
4. THE ADVISORY SPEED (XX) SHALL BE DETERMINED BY THE ENGINEER.

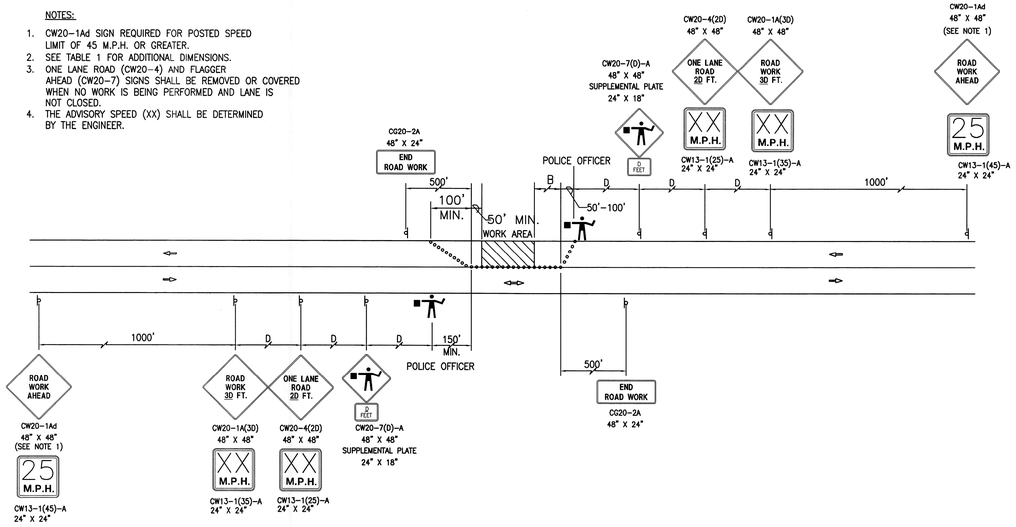

TWO-LANE HIGHWAY – ONE LANE CLOSED

NOT TO SCALE

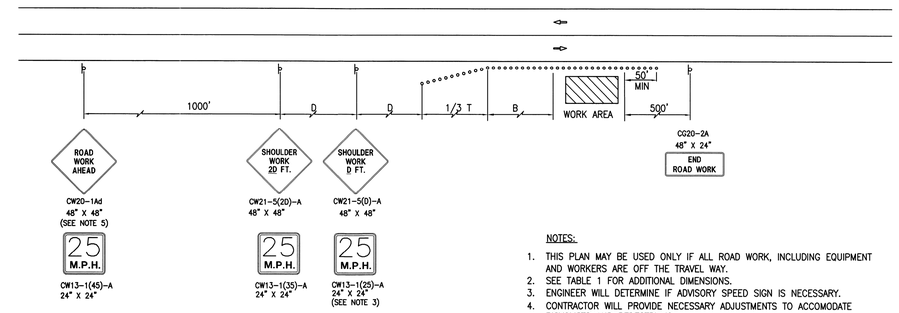

NOTES:

1. THIS PLAN MAY BE USED ONLY IF ALL ROAD WORK, INCLUDING EQUIPMENT AND WORKERS ARE OFF THE TRAVEL WAY.
2. SEE TABLE 1 FOR ADDITIONAL DIMENSIONS.
3. ENGINEER WILL DETERMINE IF ADVISORY SPEED SIGN IS NECESSARY.
4. CONTRACTOR WILL PROVIDE NECESSARY ADJUSTMENTS TO ACCOMODATE BICYCLISTS AND PEDESTRIANS.
5. CW20-1Ad SIGN REQUIRED FOR POSTED SPEED LIMIT OF 45 M.P.H. OR GREATER.
6. SIGNING IS NOT REQUIRED IF THE WORK AREA INCLUDING EQUIPMENT AND WORKERS, IS OUTSIDE THE CLEAR ZONE DISTANCE, AS SPECIFIED IN THE LATEST AASHTO ROADSIDE DESIGN GUIDE.

WORKING ON SHOULDER OR ROADSIDE

NOT TO SCALE

LEGEND

- CONES OR DELINEATOR
- DIRECTION OF TRAFFIC
- SIGN
- WORK AREA
- POLICE OFFICER / FLAGGER

TABLE 1 FOR TRAFFIC CONTROL PLAN

POSTED SPEED LIMIT (M.P.H.)	SIGN SPACING (FEET) (D)	TAPER LENGTH (T) (FEET)		LONGITUDINAL BUFFER SPACE (B) (FEET)	SPACING OF CONES OR DELINEATORS (FEET)		
		W=12' OR LESS①	W=GREATER THAN 12'①		TAPER	TANGENT	WORK AREA
20	250	200	W x 17	35	20	20	10
25	250	200	W x 17	55	25	25	10
30	250	250	W x 20	85	30	30	10
35	250	250	W x 20	120	35	35	10
40	500	350	W x 30	170	40	40	10
45	500	550	W x 45	220	45	45	10
50	1000	600	W x 50	280	50	50	10
55	1000	700	W x 55	335	55	55	10

NOTE:

① W = WIDTH OF SHOULDER OR OFFSET

POSTED SPEED LIMIT IS 25 M.P.H. ON KEANALEHU DRIVE AND MANAWALEA STREET

GENERAL NOTES FOR TRAFFIC CONTROL PLAN

1. THE PERMITTEE SHALL MAKE MINOR ADJUSTMENTS AT INTERSECTIONS, DRIVEWAYS, BRIDGES, STRUCTURES, ETC., TO FIT FIELD CONDITIONS.
2. CONES OR DELINEATORS SHALL BE EXTENDED TO A POINT WHERE THEY ARE VISIBLE TO APPROACHING TRAFFIC.
3. TRAFFIC CONTROL DEVICES SHALL BE INSTALLED SUCH THAT THE SIGN OR DEVICE FARTHEST FROM THE WORK AREA SHALL BE PLACED FIRST. THE OTHERS SHALL THEN BE PLACED PROGRESSIVELY TOWARD THE WORK AREA.
4. REGULATORY AND WARNINGS SIGNS WITHIN THE CONSTRUCTION ZONE THAT ARE IN CONFLICT WITH THE TRAFFIC CONTROL PLANS SHALL BE REMOVED OR COVERED. ALL SIGNS SHALL BE RESTORED UPON COMPLETION OF THE WORK.
5. FLAGGERS AND/OR POLICE OFFICERS SHALL BE IN SIGHT OF EACH OTHER OR IN DIRECT COMMUNICATION AT ALL TIMES.
6. WHEN REQUIRED BY THE ISSUING OFFICE, THE PERMITTEE SHALL INSTALL A FLASHING ARROW SIGNAL AS SHOWN ON THE TRAFFIC CONTROL PLANS.
7. SIGN SPACINGS, (D) TAPER LENGTHS (T) AND SPACING OR CONES OR DELINEATORS SHALL BE AS SHOWN IN TABLE 1, UNLESS OTHERWISE NOTED ON THE TRAFFIC CONTROL PLANS.
8. ALL TRAFFIC LANES SHALL BE A MINIMUM OF 10 FEET WIDE.
9. ALL CONSTRUCTION WARNING SIGNS SHALL BE PROMPTLY REMOVED OR COVERED WHENEVER THE MESSAGE IS NOT APPLICABLE OR NOT IN USE.
10. THE BACKS OF ALL SIGNS FOR TRAFFIC CONTROL SHALL BE APPROPRIATELY COVERED TO PRECLUDE THE DISPLAY OF INAPPLICABLE SIGN MESSAGES (I.E., WHEN SIGNS HAVE MESSAGES ON BOTH SIDES).
11. AT THE END OF EACH DAY'S WORK OR AS SOON AS THE WORK IS COMPLETED, THE PERMITTEE SHALL REMOVE ALL TRAFFIC CONTROL DEVICES NO LONGER NEEDED TO PERMIT FREE AND SAFE PASSAGE OF PUBLIC TRAFFIC. REMOVAL SHALL BE IN REVERSE ORDER OF INSTALLATION.
12. PERMANENT PAVEMENT MARKINGS AND TRAFFIC SIGNS SHALL BE REPLACED UPON THE COMPLETION OF EACH PHASE OF WORK.

ERIC N. S. HEE
LICENSED PROFESSIONAL ENGINEER
No. 5292-C
HAWAII, U.S.A.

THIS WORK WAS PREPARED BY ME OR UNDER MY SUPERVISION AND CONSTRUCTION OF THIS PROJECT WILL BE UNDER MY OBSERVATION. ("OBSERVATION OF CONSTRUCTION" SHALL BE AS DEFINED IN CHAPTER 115, RULES OF THE BOARD OF PROFESSIONAL ENGINEERS, ARCHITECTS AND SURVEYORS, STATE OF HAWAII, SUBCHAPTER 1, SECTION 16-115-2, DEFINITIONS, EFFECTIVE 08/29/94).

Engineers Surveyors Hawaii, Inc.
(Lic. Exp 4-30-2014)

REVISION	DATE	DESCRIPTION	MADE BY	APPROVED

DEPARTMENT OF HAWAIIAN HOME LANDS

LA'I'ŌPUA VILLAGE 4
PHASE 1 – 'ĀKAU

TAX MAP KEY: (3) 7-4-21:10 & POR. 12
KAILUA-KONA, NORTH KONA, HAWAII

TRAFFIC CONTROL PLAN

Approved:

COUNTY ENGINEER, DPW, COUNTY OF HAWAII — DATE

ENGINEERS SURVEYORS HAWAII, INC.
1320 NORTH SCHOOL ST.
HONOLULU, HAWAII 96817

SHEET 21 OF 46 SHEETS

FILE	POCKET	FOLDER	NO.

Initials Z:\Engineering\Projects\2009\59-026 Laiopua Village-4\Working Folder\21 – 59-026 Traffic Control Plan (1).dwg 11:20am – Fri, 03/29/13

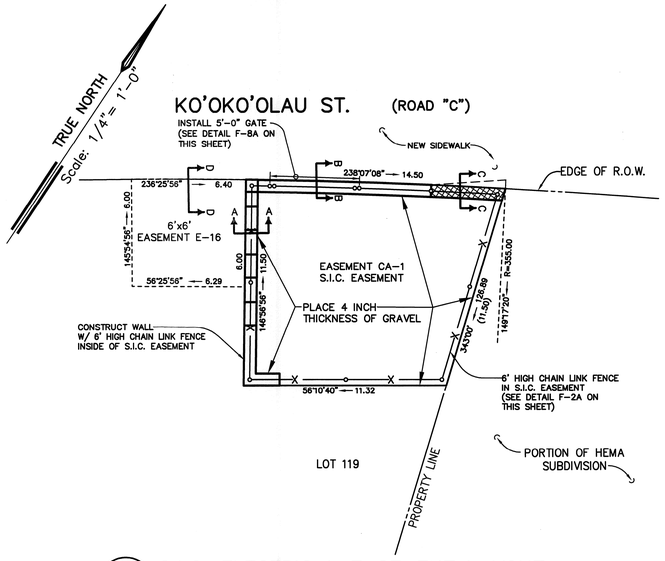

A 22 S.I.C. ELECTRICAL EASEMENT LAYOUT

SCALE: 1/4" = 1'-0"

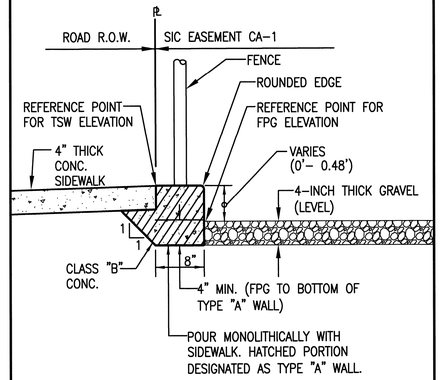

FOR LEGEND, SEE DETAIL B/22 THIS SHEET.

E 22 SECTION C-C (TYPE "A" WALL)

NOT TO SCALE

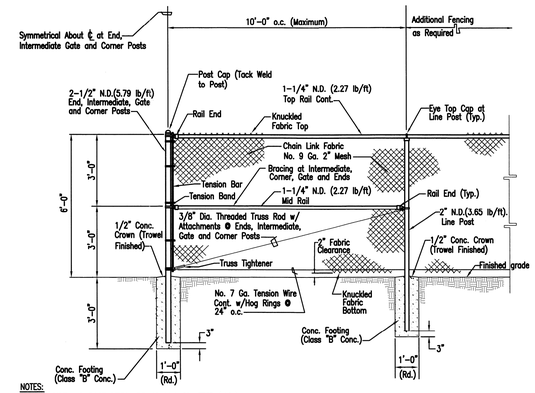

NOTES:

1. ALL PIPE AND POST SIZES ARE NOMINAL DIAMETER (N.D.).
2. CHAIN LINK FABRIC, PIPES, FITTING, FASTENERS, TRUSS ROD, POSTS, HOG RINGS AND TENSION WIRE SHALL BE HOT-DIP GALVANIZED.
3. CHAIN LINK FABRIC SHALL BE CONTINUOUS AND FASTENED TO END, INTERMEDIATE, GATE AND CORNER POSTS BY TENSION BARS WITH TENSION BANDS EVENLY SPACED AT 15" O.C. (MAX.).
4. WIRE FASTENINGS SHALL BE NO. 12 GAUGE GALVANIZED TIE WIRE.
5. CHAIN LINK FABRIC SHALL BE FASTENED TO LINE POSTS WITH WIRE FASTENINGS EVENLY SPACED AT 12" O.C. (MAX.).
6. CHAIN LINK FABRIC SHALL BE FASTENED TO HORIZONTAL RAILS WITH WIRE FASTENINGS EVENLY SPACED AT 12" O.C. (MAX.).
7. ALL WIRE FASTENING ENDS SHALL BE WRAPPED AROUND CHAIN LINK A MINIMUM OF ONE COMPLETE TURN. (HOOKING OF WIRE ENDS SHALL NOT BE PERMITTED).
8. CHAIN LINK FABRIC SHALL BE FASTENED TO TRUSS ROD WITH NO. 9 GAUGE HOG RINGS AT 12" O.C.
9. NO SPLICING SHALL BE ALLOWED ON ALL STRAIGHT-RUN PIPES.
10. TOP AND BOTTOM SELVAGES OF CHAIN LINK FABRIC SHALL BE KNUCKLED.
11. ALL FIELD WELDS AND DAMAGED GALVANIZED SURFACES SHALL BE PAINTED WITH TWO COATS OF Z.R.C. COLD GALVANIZING COMPOUND.
12. ALL FENCE POSTS SHALL BE INSTALLED EVENLY SPACED.
13. AFTER INSTALLATION, ALL BOLT ENDS SHALL BE CUT FLUSH WITH THE NUTS AND GROUND SMOOTH.

F-2A 22 6'-0" HIGH CHAIN LINK FENCE DETAIL

SCALE: NOT TO SCALE

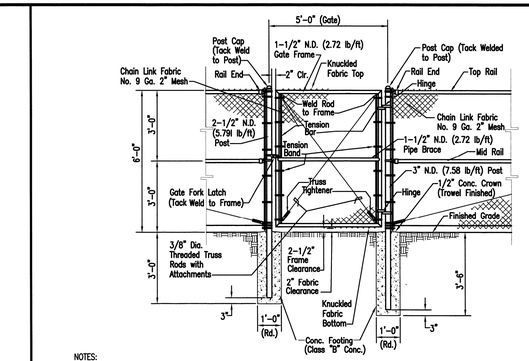

NOTES:

1. ALL PIPES AND POST SIZES ARE NOMINAL DIAMETER (N.D.).
2. GATE FRAME SHALL BE OF WELDED PIPE CONSTRUCTION. ALL WELDING SHALL CONFORM TO THE SPECIFICATIONS OF THE AMERICAN WELDING SOCIETY "STRUCTURAL WELDING CODE".
3. FOR ALL WELDED CONNECTIONS: CORNERS SHALL BE MITERED AND ALL PIPE BRACES PROPERLY COPED.
4. ALL WELDED CONNECTIONS SHALL BE PAINTED WITH TWO COATS OF Z.R.C. COLD GALVANIZING COMPOUND.
5. GATE HINGES SHALL BE TACK WELDED TO GATE POSTS AND FRAMES.
6. CHAIN LINK FABRIC, PIPES, FITTINGS, FASTENERS, TRUSS ROD, POSTS AND HOG RINGS SHALL BE HOT-DIP GALVANIZED.
7. WIRE FASTENINGS SHALL BE NO. 12 GAUGE GALVANIZED TIE WIRE.
8. CHAIN LINK FABRIC SHALL BE CONTINUOUS AND FASTENED TO SIDE FRAME PIPES BY TENSION BARS WITH TENSION BANDS EVENLY SPACED AT 15" O.C. (MAX.).
9. CHAIN LINK FABRIC SHALL BE FASTENED TO TOP AND BOTTOM FRAME PIPES WITH WIRE FASTENINGS EVENLY SPACED AT 12" O.C. (MAX.).
10. CHAIN LINK FABRIC SHALL BE FASTENED TO TRUSS RODS WITH NO. 9 GAUGE HOG RINGS EVENLY SPACED AT 12" O.C. (MAX.).
11. TOP AND BOTTOM SELVAGES OF CHAIN LINK FABRIC SHALL BE KNUCKLED.
12. ALL WIRE FASTENINGS SHALL BE WRAPPED AROUND CHAIN LINK A MINIMUM OF ONE COMPLETE TURN. (HOOKING OF WIRE ENDS SHALL NOT BE PERMITTED).
13. AFTER INSTALLATION, ALL BOLT ENDS SHALL BE CUT FLUSH WITH THE NUTS AND GROUND SMOOTH.

F-8A 22 5'-0" GATE DETAIL (6'-0" HIGH)

SCALE: NOT TO SCALE

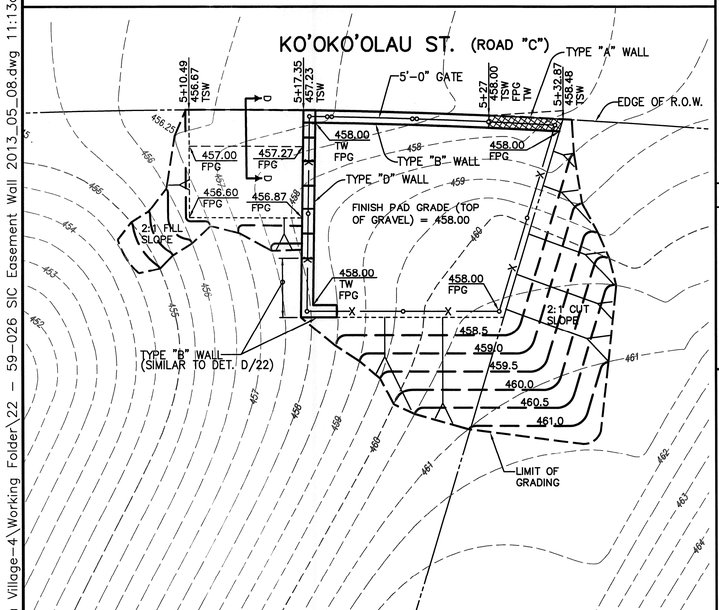

LEGEND

TSW = Top Sidewalk

TW = Top Wall

FPG = Finish Pad Grade (Top of Gravel where shown)

EROSION CONTROL NOTE:

1. FOR EROSION CONTROL, GRASS GRADED AREAS OR PLACE 4 INCH THICKNESS OF GRAVEL.

B 22 S.I.C. GRADING PLAN

SCALE: 1/4" = 1'-0"

CONTOUR INTERVAL = 0.5'

Graphic Scale in Feet

SCALE: 1/4" = 1'-0"

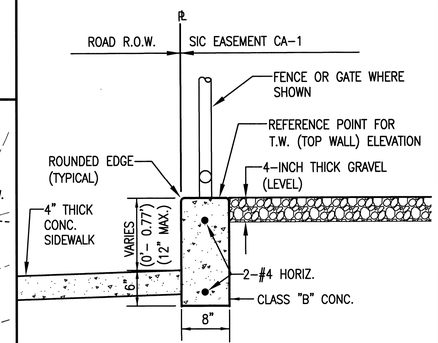

D 22 SECTION B-B (TYPE "B" WALL)

NOT TO SCALE

S.I.C. NOTES:

1. GATE SHALL BE A MINIMUM OF FIVE (5) FEET WIDE AND LOCATED ON THE NORTHWEST CORNER OF THE SITE.
2. GATE SHALL SWING OUT TOWARDS NORTHEAST (TOWARDS THE ROAD).
3. CONSTRUCT CHAIN LINK FENCE ON TOP OF WALL, WHERE WALL OCCURS.
4. TOP OF CHAIN LINK FENCE TO BE SIX (6) FEET FROM THE FINISHED PAD GRADE, TOP OF GRAVEL.
5. PLACE FOUR (4) INCH THICK #67 GRAVEL WITHIN THE SIC EASEMENT (APPROXIMATELY 2 CY).

ESTIMATED EARTHWORK QUANTITY FOR LOT 119:

AREA OF GRADING	= 330 SF
EXCAVATION	= 13.5 CY
EMBANKMENT	= 0.2 CY

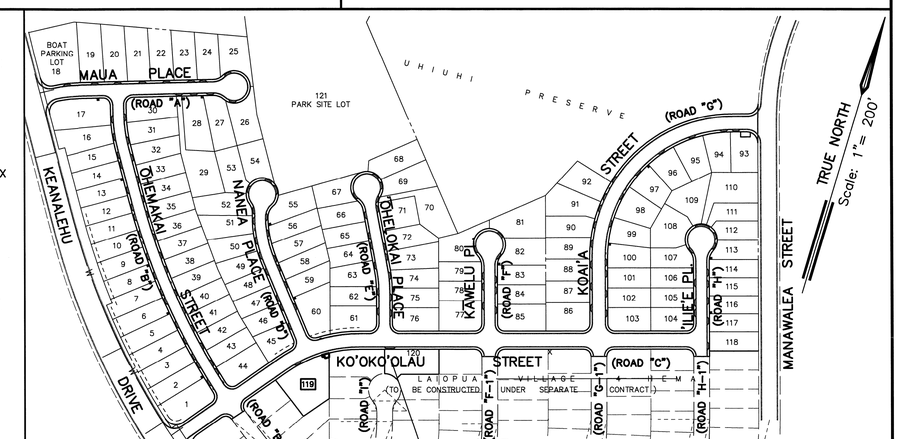

G 22 KEY MAP

SCALE: 1" = 200'

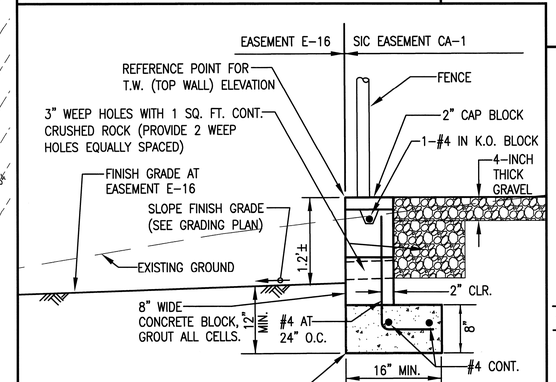

C 22 SECTION A-A (TYPE "D" WALL)

NOT TO SCALE

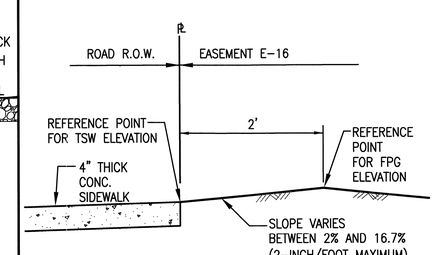

H 22 SECTION D-D

NOT TO SCALE

REVISION	DATE	DESCRIPTION	MADE BY	APPROVED

ERIC N. S. HEE — LICENSED PROFESSIONAL ENGINEER No. 5292-C — HAWAII, U.S.A.

THIS WORK WAS PREPARED BY ME OR UNDER MY SUPERVISION AND CONSTRUCTION OF THIS PROJECT WILL BE UNDER MY OBSERVATION. ("OBSERVATION OF CONSTRUCTION" SHALL BE AS DEFINED IN CHAPTER 115, RULES OF THE BOARD OF PROFESSIONAL ENGINEERS, ARCHITECTS AND SURVEYORS, STATE OF HAWAII, SUBCHAPTER 1, SECTION 16-115-2, DEFINITIONS, EFFECTIVE 08/29/94).

Engineers Surveyors Hawaii, Inc. (Lic. Exp 4-30-2014)

DEPARTMENT OF HAWAIIAN HOME LANDS

LA'I'OPUA VILLAGE 4

PHASE 1 - 'AKAU

TAX MAP KEY: (3) 7-4-21:10 & POR. 12

KAILUA-KONA, NORTH KONA, HAWAII

S.I.C. EASEMENT WALL (LOT 119)

ENGINEERS SURVEYORS HAWAII, INC.

1320 NORTH SCHOOL ST.

HONOLULU, HAWAII 96817

FILE	POCKET	FOLDER	NO.

SHEET 22 OF 46 SHEETS

Initials Y:\2009\59-026 Laiopua Village-4\Working Folder\22 - 59-026 SIC Easement Wall 2013_05_08.dwg 11:13am - Wed, 05/08/13

59-026 Laiopua Village-4\Working Folder\22 - 59-026 SIC Easement Wall 2013_05_08.dwg, Layout1, 5/8/2013 11:13:48 AM,

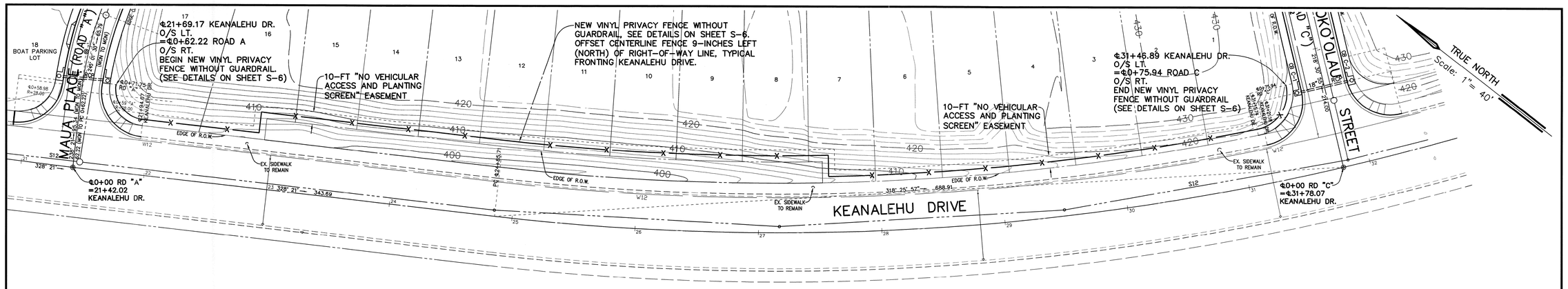

PLAN – KEANALEHU DRIVE PRIVACY FENCE

SCALE: 1" = 40'

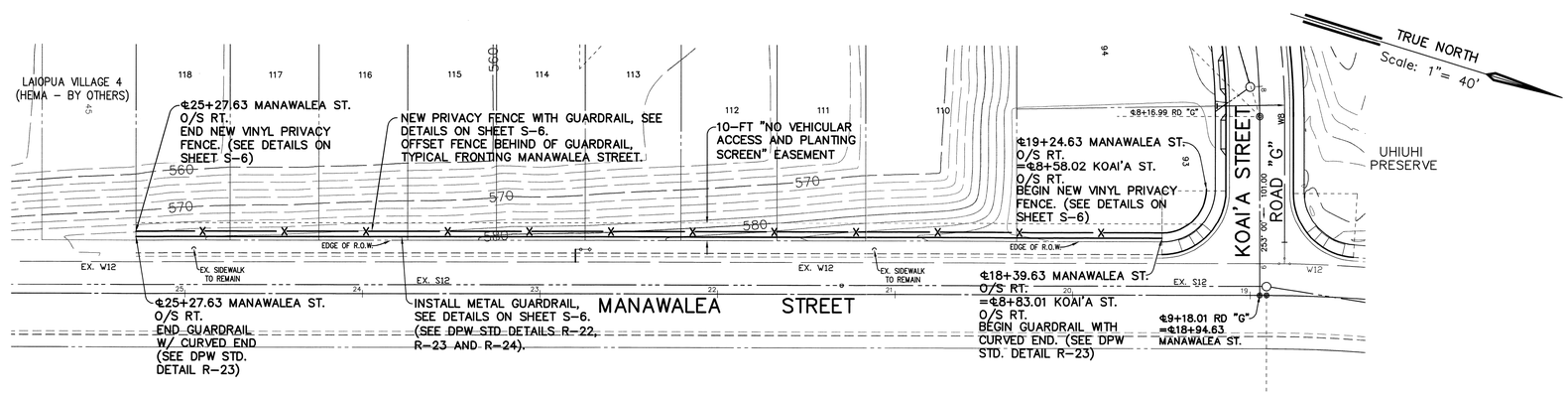

PLAN – MANAWALEA STREET PRIVACY FENCE

SCALE: 1" = 40'

40 20 0 40 80

Graphic Scale in Feet

PROPOSED PUBLIC ROAD

REVISION	DATE	DESCRIPTION	MADE BY	APPROVED

ERIC N. S. HEE
LICENSED PROFESSIONAL ENGINEER
No. 5292-C
HAWAII, U.S.A.

THIS WORK WAS PREPARED BY ME OR UNDER MY SUPERVISION AND CONSTRUCTION OF THIS PROJECT WILL BE UNDER MY OBSERVATION. ("OBSERVATION OF CONSTRUCTION" SHALL BE AS DEFINED IN CHAPTER 115, RULES OF THE BOARD OF PROFESSIONAL ENGINEERS, ARCHITECTS AND SURVEYORS, STATE OF HAWAII, SUBCHAPTER 1, SECTION 16-115-2, DEFINITIONS, EFFECTIVE 08/29/94).

Engineers Surveyors Hawaii, Inc.
(Lic. Exp 4-30-2014)

DEPARTMENT OF HAWAIIAN HOME LANDS

LA'I'OPUA VILLAGE 4

PHASE 1 – 'ĀKAU

TAX MAP KEY: (3) 7-4-21:10 & POR. 12

KAILUA-KONA, NORTH KONA, HAWAII

PRIVACY FENCE PLAN

Approved:

COUNTY ENGINEER, DPW, COUNTY OF HAWAII DATE

ENGINEERS SURVEYORS HAWAII, INC.
1320 NORTH SCHOOL ST.
HONOLULU, HAWAII 96817

FILE	POCKET	FOLDER	NO.

SHEET 23 OF 46 SHEETS

Initials Z:\Engineering\Projects\2009\59-026 Laiopua Village-4\Working Folder\23 – 59-026 Privacy Fence Plan Sht 23.dwg 11:25am – Fri, 03/29/13

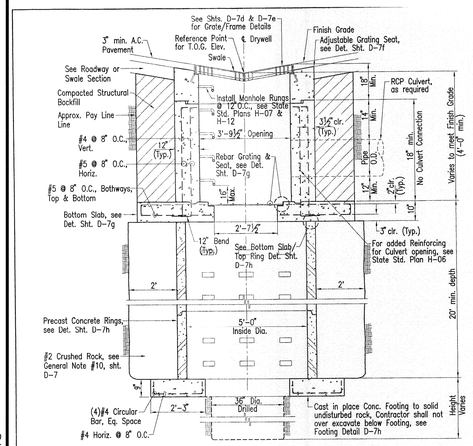

GRATED DROP INLET AND DRYWELL SECTION

NOTES:

1. Contractor shall preserve existing geological formation at proposed Drywell location to ensure proper Drywell operation.
2. Only water soluble drilling lubricants will be allowed. No clay or other drilling lubricants, which have the potential to reduce permeability will be permitted.
3. After drilling of the Drywell is completed, the sidewalls shall be washed along the entire depth and the bottom of the Drywell cleaned out to allow positive permeability.
4. Refer to State Std. Plan H-03, Plan View of Wall Section, for Horizontal Bar Bend Details.
5. Concrete Ring diameters greater than 5'-0" shall be designed and approved by a Structural Engineer.

COUNTY OF HAWAII	DRYWELL SECTION SCALE: NOT TO SCALE	STANDARD DETAILS	D-7a

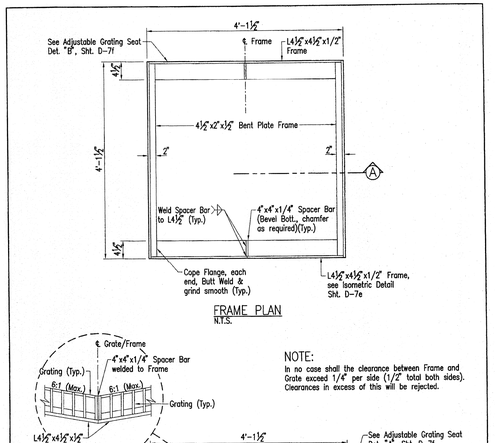

FRAME PLAN
N.T.S.

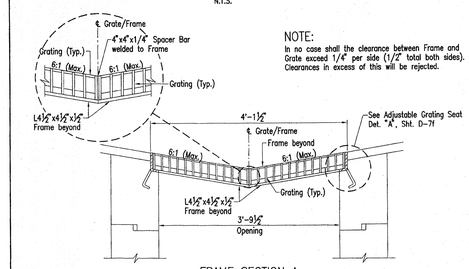

NOTE:
In no case shall the clearance between Frame and Grate exceed 1/4" per side (1/2" total both sides). Clearances in excess of this will be rejected.

FRAME SECTION A
N.T.S.

COUNTY OF HAWAII	GRATE FRAME PLAN AND SECTION SCALE: NOT TO SCALE	STANDARD DETAILS	D-7d

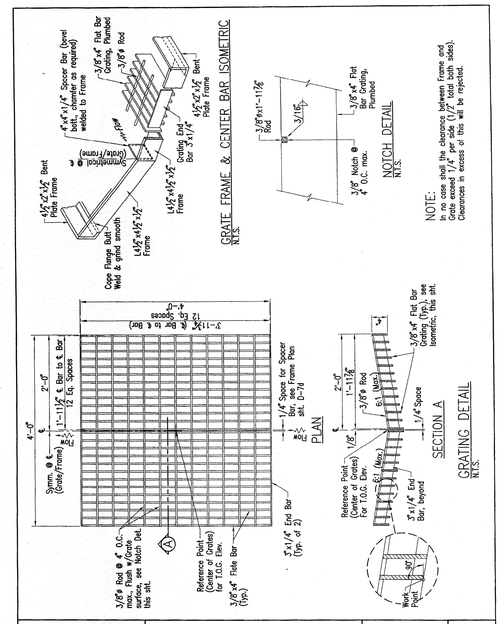

COUNTY OF HAWAII	GRATING DETAILS SCALE: NOT TO SCALE	STANDARD DETAILS	D-7e

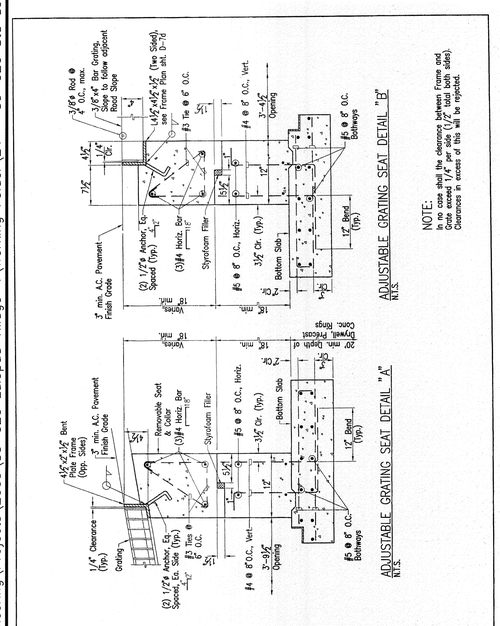

COUNTY OF HAWAII	ADJUSTABLE GRATING SEAT DETAILS SCALE: NOT TO SCALE	STANDARD DETAILS	D-7f

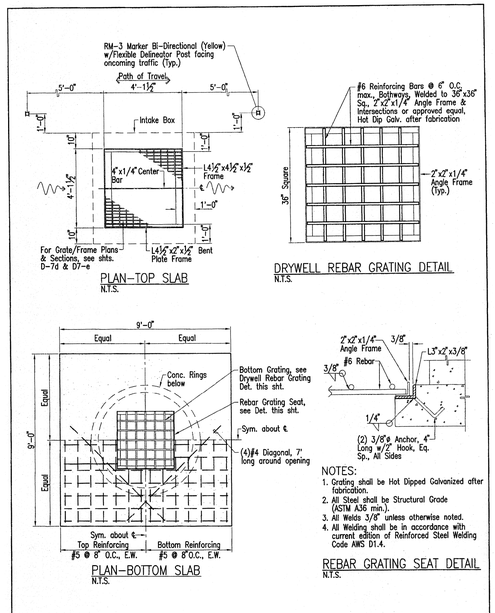

COUNTY OF HAWAII	DRYWELL INLET DETAILS SCALE: NOT TO SCALE	STANDARD DETAILS	D-7g

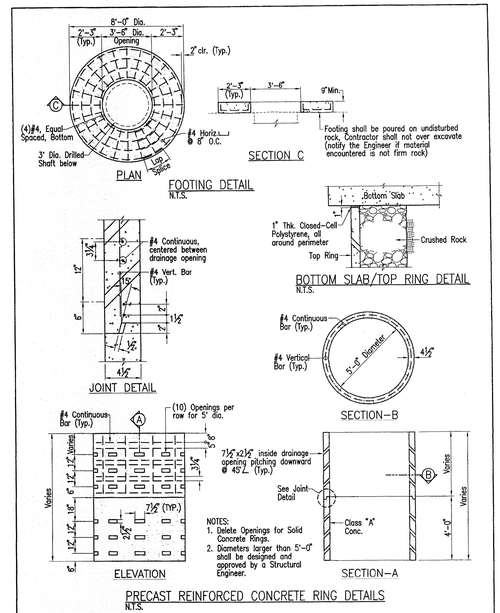

COUNTY OF HAWAII	PRECAST REINFORCED CONCRETE RING DETAILS SCALE: NOT TO SCALE	STANDARD DETAILS	D-7h

REVISION	DATE	DESCRIPTION	MADE BY	APPROVED

ERIC N. S. HEE
LICENSED PROFESSIONAL ENGINEER
No. 5292-C
HAWAII, U.S.A.

THIS WORK WAS PREPARED BY ME OR UNDER MY SUPERVISION AND CONSTRUCTION OF THIS PROJECT WILL BE UNDER MY OBSERVATION. ("OBSERVATION OF CONSTRUCTION" SHALL BE AS DEFINED IN CHAPTER 115, RULES OF THE BOARD OF PROFESSIONAL ENGINEERS, ARCHITECTS AND SURVEYORS, STATE OF HAWAII, SUBCHAPTER 1, SECTION 16-115-2, DEFINITIONS, EFFECTIVE 08/29/94).

Engineers Surveyors Hawaii, Inc.
(Lic. Exp. 4-30-2014)

DEPARTMENT OF HAWAIIAN HOME LANDS
LA'I'ŌPUA VILLAGE 4
PHASE 1 – 'ĀKAU
TAX MAP KEY: (3) 7-4-21:10 & POR. 12
KAILUA-KONA, NORTH KONA, HAWAII

STANDARD DETAILS – DRYWELL

Approved:

COUNTY ENGINEER, DPW, COUNTY OF HAWAII DATE

ENGINEERS SURVEYORS HAWAII, INC.
1320 NORTH SCHOOL ST.
HONOLULU, HAWAII 96817

FILE	POCKET	FOLDER	NO.

Initials Z:\Engineering\Projects\2009\59-026 Laiopua Village-4\Working Folder\24 – 59-026 Std det Drywell.dwg 11:54am – Fri, 03/29/13

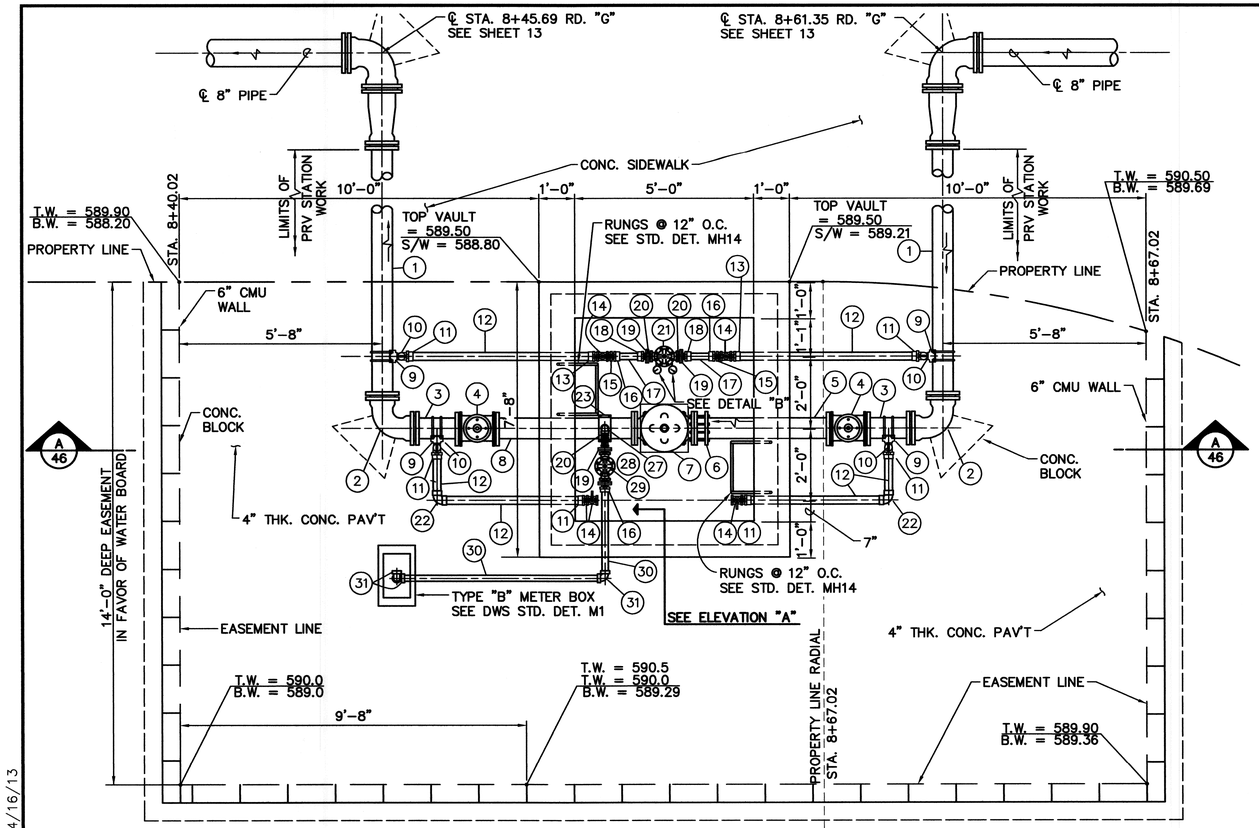

PLAN – PRESSURE REDUCING VALVE STATION

SCALE: 1/2" = 1'-0"

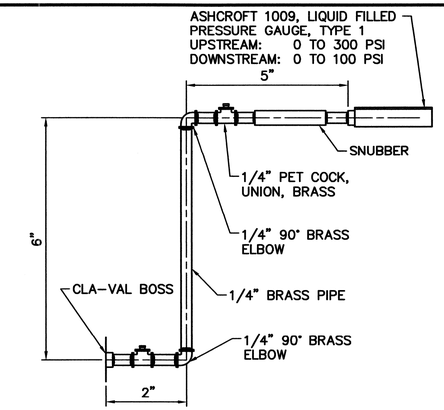

DETAIL "B"

NOT TO SCALE

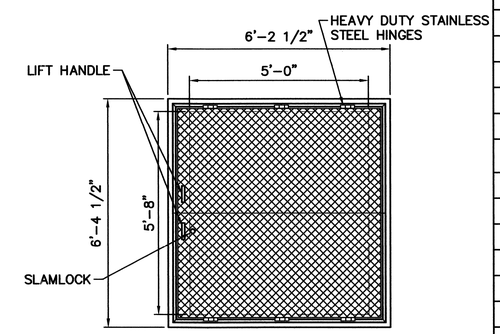

NOTE: HATCH SHALL BE "CHS2" MANUFACTURED BY EJ OR APPROVED EQUAL. INSTALLATION SHALL BE IN ACCORDANCE WITH MANUFACTURER'S REQUIREMENTS.

"CHS2" HEAVY DUTY H-20 RATED INSULATED ALUMINUM HATCH – 60"x68" COVER PLAN

SCALE: 1/2" = 1'-0"

MATERIAL SCHEDULE

ITEM	DESCRIPTION
1	6" D.I. PIPE, CUT-TO-FIT
2	6" 90° BEND, MJ WITH JOINT RESTRAINT
3	6" D.I. NIPPLE, CUT-TO-FIT
4	6" GATE VALVE, 150#, MJ WITH JOINT RESTRAINT, VALVE BOX & COVER
5	6" D.I. PIPE, P.E., CUT-TO-FIT
6	6" FLANGED COUPLING ADAPTER
7	6" PRESSURE REDUCING/SUSTAINING VALVE, F.E., CLA-VAL MODEL 92G-01 BYSP KCX X101
8	6" D.I. PIPE, F.E. x P.E., 4'-0" LONG
9	6" x 2" DOUBLE STRAP SERVICE SADDLE
10	2" x 2 1/2" CORP STOP
11	2 1/2" FEMALE ADAPTER, C-F
12	2 1/2" COPPER PIPE, CUT-TO-FIT
13	2 1/2" MALE ADAPTER, C-M
14	2 1/2" BALL VALVE, SE
15	2 1/2" x 2" BRASS BUSHING
16	2" MALE ADAPTER, C-M
17	2" COPPER PIPE, 8" LONG
18	2" FORD LOCK PACK No. CF35-77
19	2" BRASS METER FLANGES, FORD No. CF31-77
20	2" BRASS CLOSE NIPPLE
21	2" PRESSURE REDUCING VALVE, S.E., CLA-VAL MODEL 90G-01 ABS KCX X101
22	2 1/2" 90° COPPER ELBOW
23	6" x 1 1/2" DOUBLE STRAP SERVICE SADDLE
24	1 1/2" x 2" CORP STOP
25	2" BRASS UNION
26	2" x 2" x 1" BRASS TEE W/1" HOSE BIBB
27	2" BRASS STREET ELBOW
28	2" BALL VALVE, S.E.
29	2" PRESSURE RELIEF VALVE, S.E., CLA-VAL MODEL 50G-01 BP KCX X101
30	2" COPPER PIPE, CUT-TO-FIT
31	2" COPPER ELBOW, C-C

NOTES:

1. CLAYTON VALVES SHALL BE EQUIPPED WITH EPOXY COATING INTERNALLY AND EXTERNALLY.
2. PRESSURE REDUCER SETTINGS: 6" = 50 P.S.I. 2" = 55 P.S.I.
3. CRD RANGE: 15 TO 75 P.S.I. CRL RANGE: 20 TO 200 P.S.I.

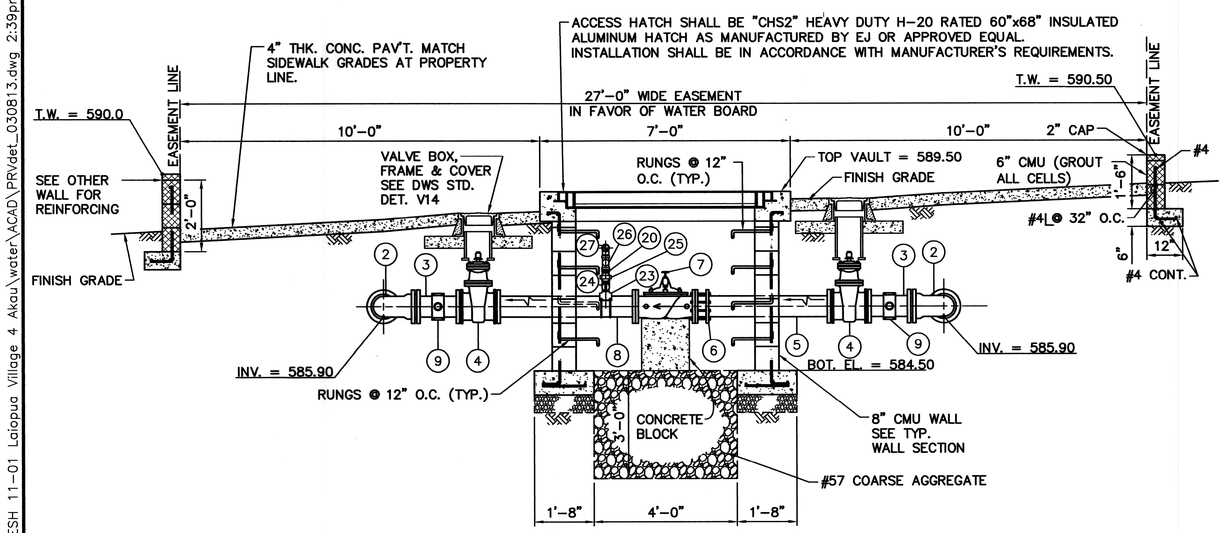

A/46 SECTION

SCALE: 1/2" = 1'-0"

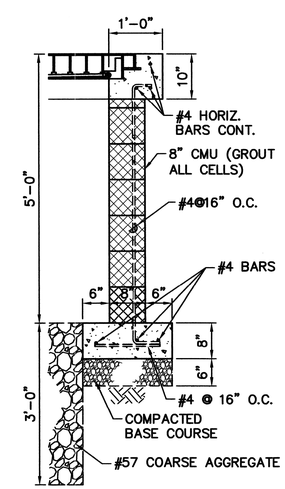

TYPICAL WALL SECTION

SCALE: 3/4" = 1'-0"

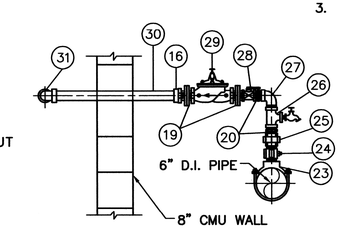

ELEVATION "A"

SCALE: 3/4" = 1'-0"

1' 0 1' 2' 3'

SCALE: 3/4" = 1'-0"

2' 0 2' 4'

SCALE: 1/2" = 1'-0"

REVISION	DATE	DESCRIPTION	MADE BY	APPROVED

KEN C. KAWAHARA LICENSED PROFESSIONAL ENGINEER No. 9148-C HAWAII, U.S.A.

EXPIRATION DATE OF THE LICENSE 4/30/2014
THIS WORK WAS PREPARED BY ME OR UNDER MY SUPERVISION. CONSTRUCTION OF THIS PROJECT WILL BE UNDER MY OBSERVATION.

DEPARTMENT OF HAWAIIAN HOME LANDS

LA'I'OPUA VILLAGE 4
PHASE 1 – 'ĀKAU

TAX MAP KEY: (3) 7-4-21:10 & POR. 12
KAILUA-KONA, NORTH KONA, HAWAII

PRESSURE REDUCING VALVE DETAILS

ENGINEERS SURVEYORS HAWAII, INC.
1320 NORTH SCHOOL ST.
HONOLULU, HAWAII 96817

FILE	POCKET	FOLDER	NO.

Initials G:\ESH 11-01 Laiopua Village 4 Akau\water\ACAD\PRVdet_030813.dwg 2:39pm – Tue, 04/16/13

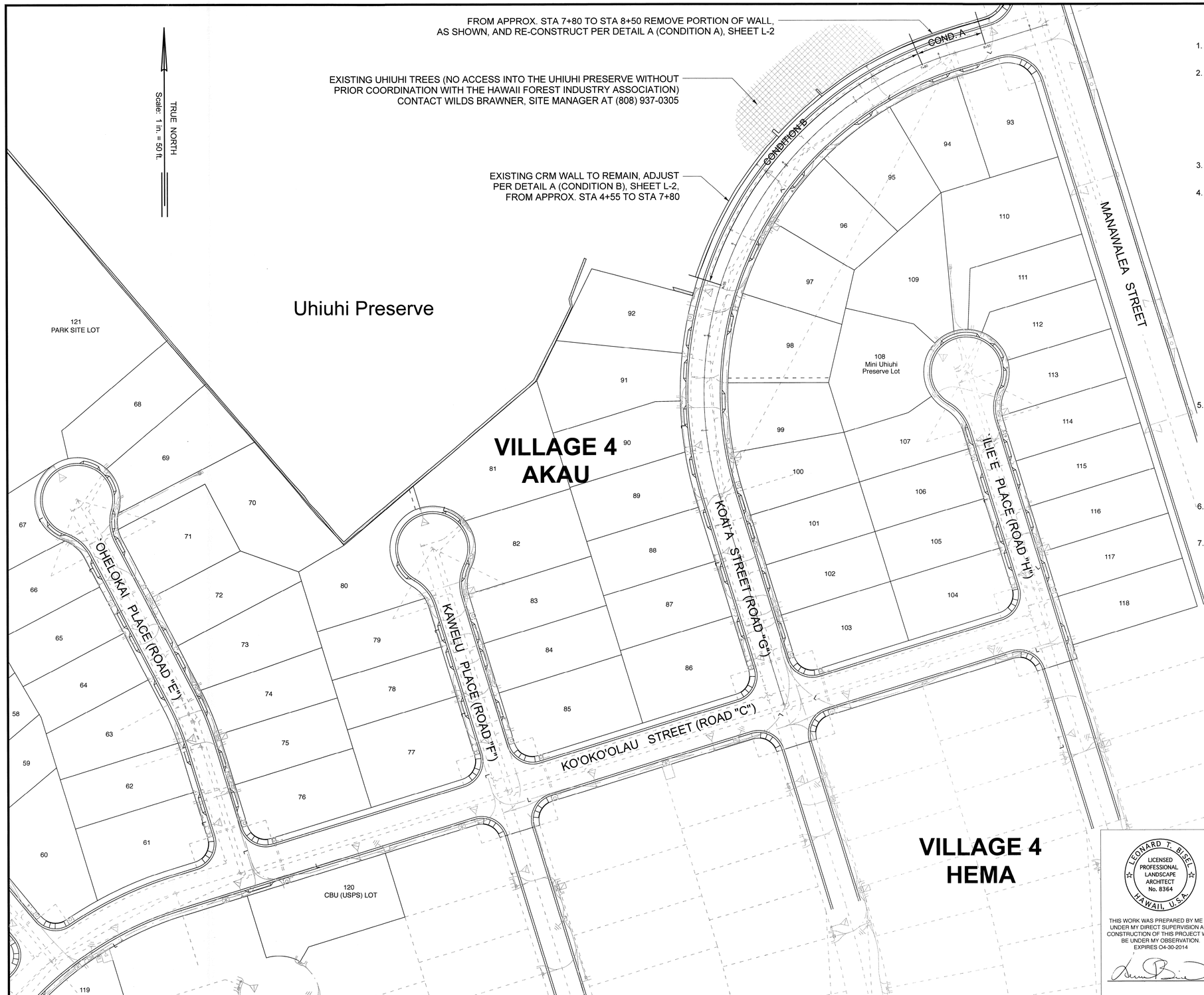

STONE WALL/FENCING NOTES

1. NEW STONE WALLS SHALL MATCH EXISTING WALLS IN APPEARANCE.
2. STONES SHALL BE LOCAL, A'A OF THE SAME COLOR AND TEXTURE AS THE EXISTING WALLS. STONES SHALL BE CLEAN, HARD, SOUND AND DURABLE. EACH STONE, EXCEPT STONES FOR FILLING OR PINNING INTERSTICES, SHALL HAVE A THICKNESS OF NOT LESS THAN SIX (6) INCHES AND A WIDTH OF NOT LESS THAN ONE AND A HALF TIMES THE THICKNESS OR LESS THAN TWELVE (12) INCHES. FACE STONES SHALL HAVE A VOLUME OF NOT LESS THAN 0.75 CUBIC FOOT. HEART STONES SHALL HAVE A VOLUME OF NOT LESS THAN 0.5 CUBIC FOOT.
3. MORTAR SHALL BE TYPE M, HAVING A MINIMUM COMPRESSIVE STRENGTH OF 2,500 PSI AT 28 DAYS.
4. CONSTRUCTION REQUIREMENTS:
   - A. STONES SHALL BE ROUGHLY SQUARED AND PITCHED TO LINES AT ANGLES AND ENDS OF WALLS.
   - B. STONES SHALL BE THOROUGHLY WET BEFORE LAYING.
   - C. STONES SHALL BE OVER-LAPPING JOINTS AT LEAST SIX (6) INCHES AND FORM A FIRM BOND.
   - D. LARGE FLAT STONES SHALL BE USED FOR THE BOTTOM COURSE. THE STONES SHALL BE FIRMLY EMBEDDED IN MORTAR.
   - E. HORIZONTAL JOINTS IN THE FACE SHALL NOT EXCEED ONE (1) INCH IN THICKNESS. VERTICAL JOINTS SHALL NOT EXCEED TWO (2) INCHES IN THICKNESS. MORTAR JOINTS SHALL BE CLEANED OF ALL MORTAR, WETTED, AND POINTED WITH PORTLAND CEMENT MORTAR. RAKE BACK ALL MORTAR JOINTS TO A DEPTH OF THREE QUARTER (3/4) INCH. MASONRY SHALL BE KEPT MOIST FOR A MINIMUM OF 24 HOURS.
5. FOUNDATION: WALL BASE SHALL BE FOUNDED ON FIRM UNDISTURBED SOIL OR STRUCTURAL FILL COMPACTED TO A MINIMUM NINETY FIVE PERCENT RELATIVE COMPACTION. IF SOFT AND/LOOSE MATERIAL ARE FOUND AT THE BOTTOM OF THE EXCAVATION THEY SHALL BE EXCAVATED TO FIRM UNDISTURBED SOIL. THE OVER-EXCAVATION SHALL BE FILLED WITH GRANULAR FILL AND COMPACTED TO A MINIMUM NINETY FIVE PERCENT RELATIVE COMPACTION OR THE WALL BASE MAY BE EXTENDED DOWN TO THE FIRM UNDISTURBED SOIL, CONSULT WITH DRAWINGS.
6. HEAVY DUTY HOG/FIELD WIRE FENCE FABRIC SHALL BE ASTM CLASS 3 GALVANIZED, 12-1/2 GAUGE MIN. (HIGH-TENSILE WIRE 14 GAUGE, MIN.), 6" MAXIMUM OPENINGS.
7. PROVIDE POST CLIPS TO SECURE HOG WIRE FABRIC AT EACH LOCATION WHERE HOG WIRE FABRIC CROSSES OVER AN END OR CORNER PULL POST OR A BRACE POST.

REVISION	DATE	DESCRIPTION	MADE BY	APPROVED

LEONARD T. BISEL
LICENSED PROFESSIONAL LANDSCAPE ARCHITECT
No. 8364
HAWAII, U.S.A.

THIS WORK WAS PREPARED BY ME OR UNDER MY DIRECT SUPERVISION AND CONSTRUCTION OF THIS PROJECT WILL BE UNDER MY OBSERVATION.
EXPIRES 04-30-2014

DEPARTMENT OF HAWAIIAN HOME LANDS

LA`I`ŌPUA VILLAGE 4
PHASE 1 - `ĀKAU

TAX MAP KEY: (3) 7-4-21:10 & POR. 12
KAILUA-KONA, NORTH KONA, HAWAII

PRESERVE BARRIER WALL DEMOLITION AND REPLACEMENT PLAN

Approved:

COUNTY ENGINEER, DPW, COUNTY OF HAWAII DATE

SHEET L-1 OF 46 SHEETS

FILE	POCKET	FOLDER	NO.

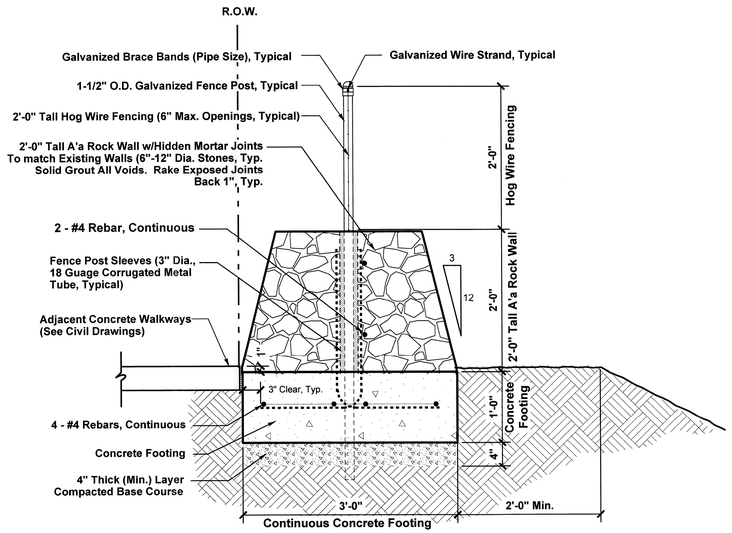

"CONDITION A"
(Section View @ Fill Slope)
Scale: 1"=1'-0"

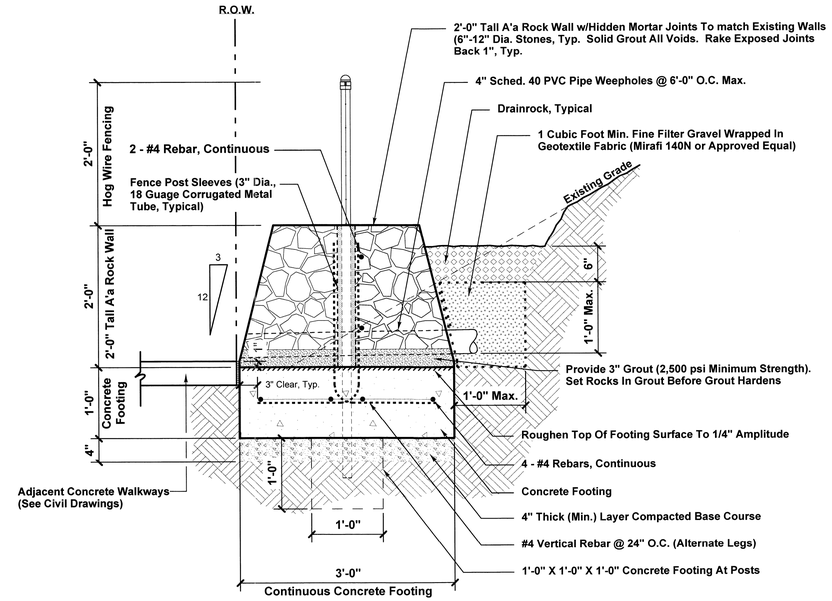

"CONDITION A"
(Section View @ Cut Slope)
Scale: 1"=1'-0"

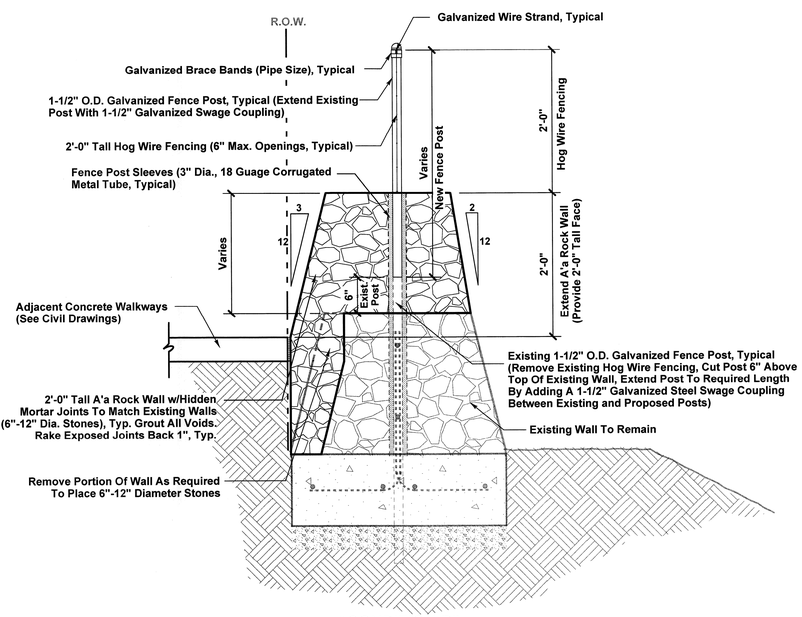

"CONDITION B"
(Section View @ Fill Slope)
Scale: 1"=1'-0"

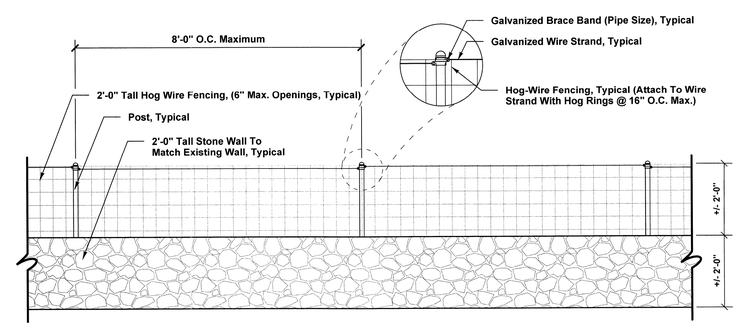

ELEVATION VIEW
Scale: 1/2"=1'-0"

(A) PRESERVE BARRIER WALL WITH 2'-0" TALL HOG WIRE FENCE

REVISION	DATE	DESCRIPTION	MADE BY	APPROVED

LEONARD T. BISEL
LICENSED PROFESSIONAL LANDSCAPE ARCHITECT No. 8364
HAWAII, U.S.A.

THIS WORK WAS PREPARED BY ME OR UNDER MY DIRECT SUPERVISION AND CONSTRUCTION OF THIS PROJECT WILL BE UNDER MY OBSERVATION. EXPIRES 04-30-2014

DEPARTMENT OF HAWAIIAN HOME LANDS
LA`I`ŌPUA VILLAGE 4
PHASE 1 - `ĀKAU
TAX MAP KEY: (3) 7-4-21:10 & POR. 12
KAILUA-KONA, NORTH KONA, HAWAII

PRESERVE BARRIER WALL DETAILS

Approved:

COUNTY ENGINEER, DPW, COUNTY OF HAWAII DATE

SHEET L-2 OF 46 SHEETS

FILE	POCKET	FOLDER	NO.

GENERAL:

A. WORKMANSHIP AND MATERIALS SHALL CONFORM TO THE BUILDING CODE OF THE COUNTY OF HAWAII (AMENDED IBC, 2006 EDITION). HOWEVER, WHERE REFERENCE IS MADE TO PERFORMANCE CONFORMING TO OTHER STANDARDS THE MORE STRINGENT SHALL APPLY.

B. THE CONTRACTOR SHALL COMPARE ALL THE CONTRACT DOCUMENTS WITH EACH OTHER AND REPORT IN WRITING TO THE ENGINEER ALL INCONSISTENCIES AND OMISSIONS.

C. THE CONTRACTOR SHALL TAKE FIELD MEASUREMENTS AND VERIFY FIELD CONDITIONS AND SHALL COMPARE SUCH FIELD MEASUREMENTS AND CONDITIONS WITH THE DRAWINGS BEFORE COMMENCING WORK. REPORT IN WRITING TO THE ENGINEER ALL INCONSISTENCIES AND OMISSIONS.

D. THE CONTRACTOR SHALL BE RESPONSIBLE FOR COORDINATING THE WORK OF ALL TRADES.

E. THE CONTRACTOR SHALL BE RESPONSIBLE FOR METHODS OF CONSTRUCTION, WORKMANSHIP AND JOB SAFETY. THE CONTRACTOR SHALL PROVIDE TEMPORARY SHORING AND BRACING AS REQUIRED FOR STABILITY OF STRUCTURAL MEMBERS AND SYSTEMS.

F. CONSTRUCTION LOADING SHALL NOT EXCEED DESIGN LIVE LOAD UNLESS SPECIAL SHORING IS PROVIDED. ALLOWABLE LOADS SHALL BE REDUCED IN AREAS WHERE THE STRUCTURE HAS NOT ATTAINED FULL DESIGN STRENGTH.

G. THE CONTRACTOR SHALL BE RESPONSIBLE FOR PROTECTION OF THE ADJACENT PROPERTIES, STRUCTURES, STREETS AND UTILITIES DURING THE CONSTRUCTION PERIOD.

H. DETAILS NOTED AS TYPICAL ON THE STRUCTURAL DRAWINGS SHALL APPLY IN ALL CONDITIONS UNLESS SPECIFICALLY SHOWN OR NOTED.

DESIGN CRITERIA:

A. BASIC WIND SPEED AND EXPOSURE ——— 105 MPH, EXPOSURE C
B. ALLOWABLE FOUNDATION BEARING CAPACITIES
   a. DEAD LOAD + LIVE LOAD ——— 3,000 PSF
   b. DEAD LOAD + LIVE LOAD + WIND OR SEISMIC ——— 4,000 PSF

FOUNDATION:

A. CONTRACTOR SHALL PROVIDE FOR DE-WATERING OF EXCAVATION FROM SURFACE WATER, GROUND WATER OR SEEPAGE, AND OBTAIN NPDES PERMIT, IF REQUIRED.

B. CONTRACTOR SHALL PROVIDE FOR DESIGN AND INSTALLATION OF ALL CRIBBING, SHEETING, AND SHORING NECESSARY TO PRESERVE EXCAVATIONS AND EARTH BANKS.

C. FOOTINGS SHALL BEAR ON UNDISTURBED IN-SITU FIRM SOILS. BOTTOM OF FOOTINGS SHALL BE COMPACTED TO PROVIDE A RELATIVELY FIRM AND SMOOTH BEARING SURFACE PRIOR TO PLACEMENT OF REINFORCING STEEL AND CONCRETE. IF SOFT AND/OR LOOSE MATERIALS ARE ENCOUNTERED AT THE BOTTOM OF FOOTING EXCAVATIONS, THEY SHALL BE OVER-EXCAVATED TO EXPOSE THE UNDERLYING FIRM MATERIALS. THE OVER-EXCAVATED AREAS SHALL BE BACKFILLED WITH SELECT GRANULAR MATERIAL COMPACTED TO A MINIMUM OF 95% RELATIVE COMPACTION OR THE FOOTING BOTTOM MAY BE EXTENDED DOWN TO THE UNDERLYING COMPETENT MATERIAL.

CONCRETE:

A. CONCRETE CONSTRUCTION SHALL CONFORM TO AMERICAN CONCRETE INSTITUTE ACI 318.

B. CONCRETE SHALL BE REGULAR WEIGHT HARD ROCK CONCRETE AND SHALL HAVE THE FOLLOWING MINIMUM 28 DAY COMPRESSIVE STRENGTHS:
   a. FOOTINGS ——— 3,000 PSI
   b. CATCH BASIN ——— 4,000 PSI
   c. P/C DRYWELL ——— SEE CIVIL DWGS
   d. ALL OTHER CONCRETE ——— 4,000 PSI

C. CONCRETE DELIVERY TICKETS SHALL RECORD ALL FREE WATER IN THE MIX: AT BATCHING BY PLANT, FOR CONSISTENCY BY DRIVER, AND ANY ADDITIONAL REQUEST BY CONTRACTOR IF PERMITTED BY THE MIX DESIGN.

D. ALL INSERTS, ANCHOR BOLTS, PLATES, AND OTHER ITEMS TO BE CAST IN THE CONCRETE SHALL BE HOT-DIPPED GALVANIZED ACCORDING TO ASTM A153 UNLESS OTHERWISE NOTED.

E. REINFORCING BARS, ANCHOR BOLTS, INSERTS, AND OTHER ITEMS TO BE CAST IN THE CONCRETE SHALL BE SECURED IN POSITION PRIOR TO PLACEMENT OF CONCRETE.

F. CONDUITS, PIPES, AND SLEEVES PASSING THROUGH A SLAB OR FOOTING AND NOT CONFORMING TO TYPICAL DETAILS SHALL BE LOCATED AND SUBMITTED TO THE ENGINEER FOR APPROVAL.

CONCRETE (CONT):

G. CONDUITS, PIPES, AND SLEEVES EMBEDDED WITHIN A SLAB OR WALL (OTHER THAN THOSE MERELY PASSING THROUGH) SHALL BE:
   a. NO LARGER IN OUTSIDE DIMENSIONS THAN ONE THIRD THE OVERALL SLAB OR WALL THICKNESS IN WHICH THEY ARE EMBEDDED.
   b. PLACED IN THE MIDDLE ONE THIRD OF SLAB OR WALL THICKNESS
   c. SPACED NO CLOSER THAN THREE DIAMETERS OR WIDTHS ON CENTER.

H. THE CONTRACTOR SHALL LOCATE CONSTRUCTION JOINTS SO AS NOT TO IMPAIR THE STRENGTH OF THE STRUCTURE AND TO MINIMIZE SHRINKAGE STRESSES. SUBMIT LOCATION OF CONSTRUCTION JOINTS TO THE ENGINEER FOR APPROVAL, UNLESS OTHERWISE NOTED.

I. NON-SHRINK GROUT SHALL BE A PREMIXED NON-METALLIC FORMULA, CAPABLE OF DEVELOPING A MINIMUM COMPRESSIVE STRENGTH OF 3,000 PSI IN 1 DAY AND 5,000 PSI IN 28 DAYS.

REINFORCING STEEL:

A. REINFORCING STEEL SHALL BE DEFORMED BARS CONFORMING TO ASTM A615, GRADE 60.

B. CLEAR CONCRETE COVER FOR REINFORCING BARS SHALL BE AS FOLLOWS, UNLESS OTHERWISE NOTED:
   a. FOOTINGS, GRADE BEAMS, ETC. CAST AGAINST EARTH ——— 3"
   b. FOOTINGS, GRADE BEAMS, ETC. FORMED AND EXPOSED TO EARTH OR WEATHER ——— 2"
   c. BEAMS AND COLUMNS PRIMARY REINFORCEMENT, STIRRUPS, TIES AND SPIRALS ——— 1 1/2"

C. REINFORCING STEEL SHALL BE SPLICED WHERE INDICATED ON PLANS. PROVIDE LAP SPLICE LENGTH PER TYPICAL DETAILS AND SCHEDULE, UNLESS OTHERWISE NOTED.

D. MECHANICAL SPLICE CONNECTORS SHALL DEVELOP IN TENSION 125 PERCENT OF THE SPECIFIED MINIMUM YIELD STRENGTH OF REINFORCING BARS.

E. BAR BENDS AND HOOKS SHALL BE "STANDARD HOOKS" IN ACCORDANCE WITH ACI 318.

STRUCTURAL STEEL:

A. FABRICATION AND ERECTION OF STRUCTURAL STEEL SHALL CONFORM TO THE AMERICAN INSTITUTE OF STEEL CONSTRUCTION MANUAL OF STEEL CONSTRUCTION, THIRTEENTH EDITION.

B. STRUCTURAL STEEL SHALL CONFORM TO ASTM A36 UNLESS OTHERWISE NOTED.

C. STEEL TUBES (HSS) SHALL CONFORM TO ASTM A500, GRADE B

D. PLATES AND BARS SHALL CONFORM TO ASTM A36.

E. WELDS AND WELDING PROCEDURES SHALL CONFORM TO THE STRUCTURAL WELDING CODE AWS D1.1 OF THE AMERICAN WELDING SOCIETY.

F. WELDING SHALL BE PERFORMED BY WELDERS PREQUALIFIED FOR WELDING PROCEDURES TO BE USED.

G. WELDING ELECTRODES SHALL BE E70XX.

H. ALL ANCHOR BOLTS, PLATES, AND OTHER ITEMS TO BE CAST IN CONCRETE SHALL BE HOT-DIP GALVANIZED ACCORDING TO ASTM A153 UNLESS OTHERWISE NOTED.

I. BOLTS SHALL CONFORM TO ASTM A307, GRADE A UNLESS OTHERWISE NOTED, AND SHALL BE HOT-DIP GALVANIZED ACCORDING TO ASTM A153.

K. ALL STEEL SHALL BE HOT-DIP GALVANIZED AFTER FABRICATION ACCORDING TO ASTM A123.

MINIMUM SPLICE AND DEVELOPMENT LENGTHS

BAR SIZE	CONCRETE STRENGTH = 3,000 PSI					CONCRETE STRENGTH = 4,000 PSI				
	LAP SPLICE		DEVELOPMENT			LAP SPLICE		DEVELOPMENT		
			STRAIGHT		WITH STANDARD HOOK			STRAIGHT		WITH STANDARD HOOK
	TOP BARS	OTHER BARS	TOP BARS	OTHER BARS		TOP BARS	OTHER BARS	TOP BARS	OTHER BARS	
#3	28"	22"	22"	18"	10"	26"	20"	20"	16"	8"
#4	38"	30"	30"	22"	12"	34"	26"	26"	20"	10"
#5	48"	36"	36"	28"	14"	42"	32"	32"	24"	12"
#6	56"	44"	44"	34"	18"	50"	38"	38"	30"	16"
#7	82"	64"	64"	48"	20"	72"	54"	54"	42"	18"
#8	94"	72"	72"	56"	22"	82"	62"	62"	48"	20"
#9	106"	82"	82"	62"	26"	92"	70"	70"	54"	22"
#10	118"	92"	92"	70"	28"	102"	80"	80"	62"	26"
#11	132"	102"	102"	78"	32"	114"	88"	88"	68"	28"

NOTES:

1. LENGTHS ARE FOR CONCRETE WITH REBAR SPACED AT 6 BAR DIAMETERS MINIMUM. INCREASE LENGTHS BY 25% FOR BARS SPACED LESS THAN 6 BAR DIAMETERS.

2. "TOP BARS" ARE HORIZONTAL BARS WITH 12" OR MORE OF CONCRETE CAST BELOW.

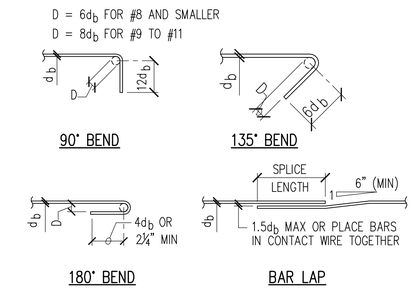

1 / S-1 TYPICAL REBAR SPLICE AND DEVELOPMENT LENGTH SCHEDULE
NOT TO SCALE

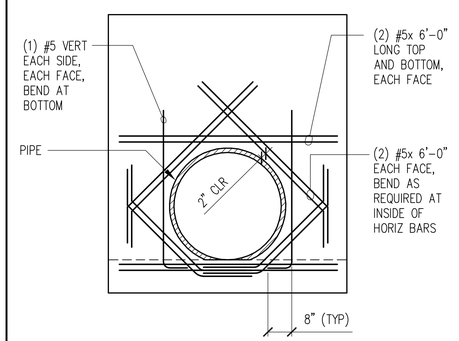

2 / S-1 ADDED REINFORCING AT PIPE OPENINGS
NOT TO SCALE

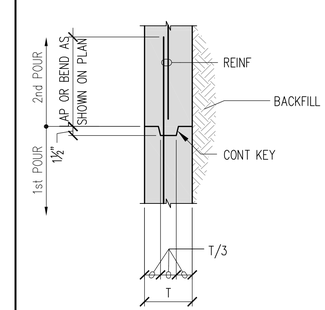

3 / S-1 TYPICAL CONSTRUCTION JOINT DETAIL
NOT TO SCALE

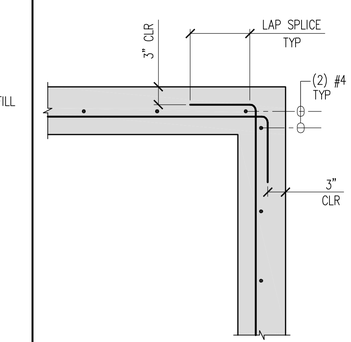

4 / S-1 TYPICAL CORNER BEND DETAIL
NOT TO SCALE

REVISION	DATE	DESCRIPTION	MADE BY	APPROVED

KEN KAZUO HAYASHIDA
LICENSED PROFESSIONAL ENGINEER
No. 6818-S
HAWAII, U.S.A.

EXPIRATION DATE OF THE LICENSE 4/30/2014
THIS WORK WAS PREPARED BY ME OR UNDER MY SUPERVISION

DEPARTMENT OF HAWAIIAN HOME LANDS
LA'I'ŌPUA VILLAGE 4
PHASE 1 – 'ĀKAU
TAX MAP KEY: (3) 7-4-21:10 & POR. 12
KAILUA-KONA, NORTH KONA, HAWAII

GENERAL NOTES AND TYPICAL DETAILS

Approved:

COUNTY ENGINEER, DPW, COUNTY OF HAWAII — DATE

FILE	POCKET	FOLDER	NO.

Initials P:\2651-2700\2700 DHHL – Laiopua Villages – 4 Subdivision\Drawings\Structural\AutoCAD_format\2013-04-05_2700_Laiopua\2700_S-1.dwg 9:06am – Mon, 04/08/13

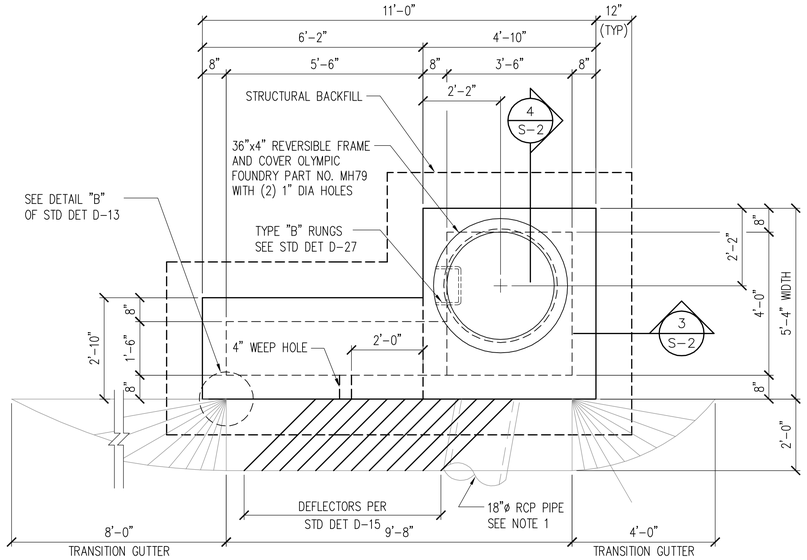

1 S-2 **PLAN - CATCH BASIN (MODIFIED TYPE A)**
SCALE: 1/2" = 1'-0"

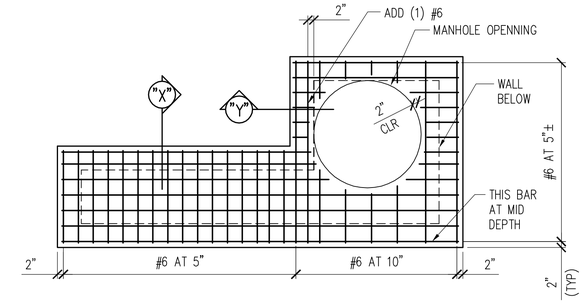

TOP REINFORCEMENT LAYOUT

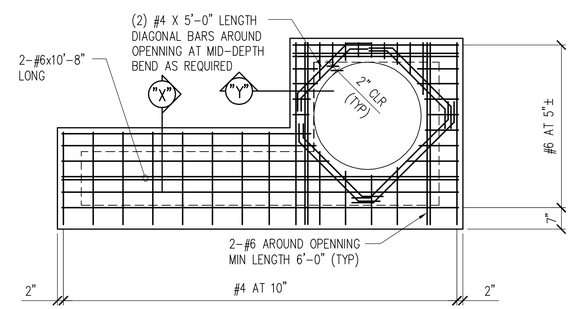

BOTTOM REINFORCEMENT LAYOUT

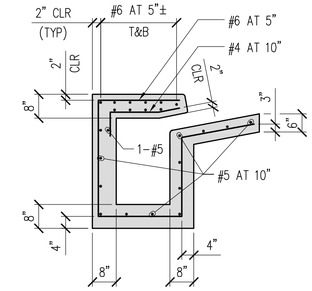

SECTION "X"

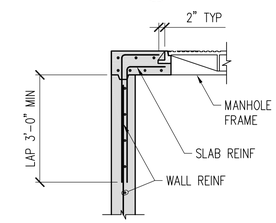

SECTION "Y"

2 S-2 **TOP SLAB REINFORCEMENT LAYOUT**
SCALE: 1/2" = 1'-0"

NOTES:

1. REFERENCE CIVIL DRAWINGS FOR THE ELEVATION OF CATCH BASINS, AND LOCATIONS, NUMBER AND SIZE OF PIPES. OPENING OF OUTLET PIPE SHALL BE ROUNDED WITH MINIMUM RADIUS OF 0.15 TIMES PIPE DIAMETER.
2. PROVIDE 2 CUBIC FEET OF CRUSHED ROCK, ASTM SIZE #9 ROCK SAND AT WEEP HOLE.

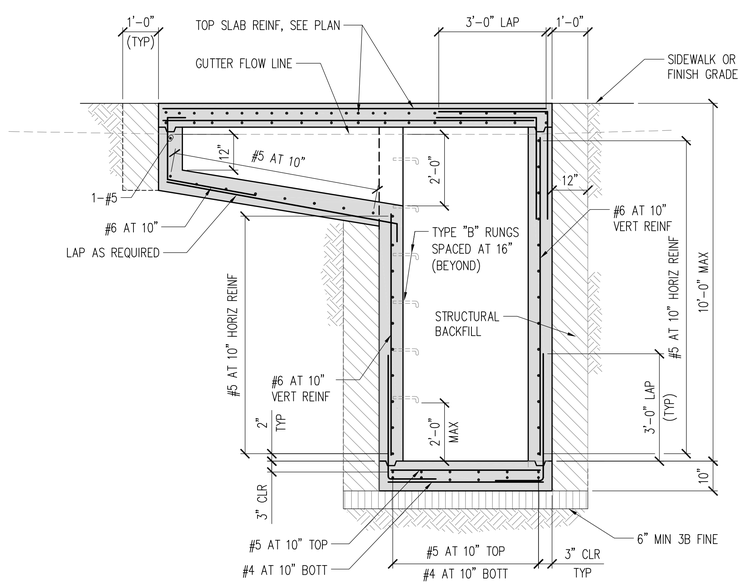

3 S-2 **SECTION**
SCALE: 1/2" = 1'-0"

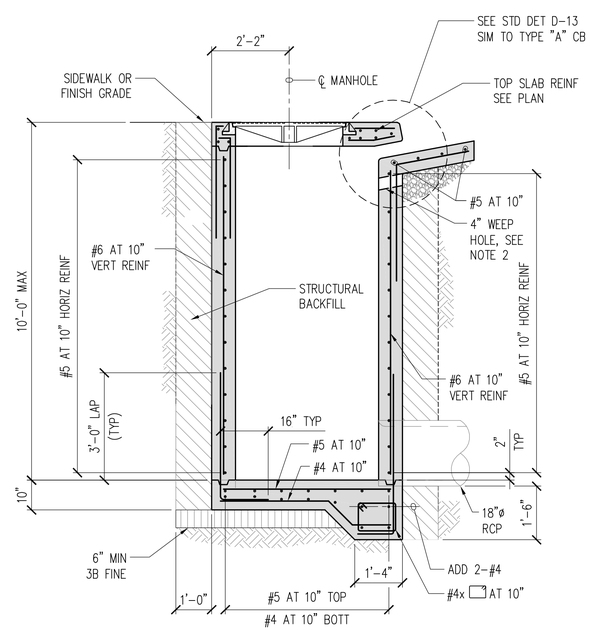

4 S-2 **SECTION**
SCALE: 1/2" = 1'-0"

0' 1' 2' 3' 4' 5' 6'
1/2" = 1'-0"

REVISION	DATE	DESCRIPTION	MADE BY	APPROVED

KEN KAZUO HAYASHIDA
LICENSED PROFESSIONAL ENGINEER
No. 6818-S
HAWAII, U.S.A.

EXPIRATION DATE OF THE LICENSE 4/30/2014
THIS WORK WAS PREPARED BY ME OR UNDER MY SUPERVISION

DEPARTMENT OF HAWAIIAN HOME LANDS
LA'I'ŌPUA VILLAGE 4
PHASE 1 – 'ĀKAU
TAX MAP KEY: (3) 7-4-21:10 & POR. 12
KAILUA-KONA, NORTH KONA, HAWAII

MODIFIED TYPE "A" CATCH BASIN

Approved:

COUNTY ENGINEER, DPW, COUNTY OF HAWAII DATE

SHEET S-2 OF 46 SHEETS

FILE	POCKET	FOLDER	NO.

Initials P:\2651-2700\2700 DHHL – Laiopua Villages – 4 Subdivision\Drawings\Structural\AutoCAD_format\2013-04-05_2700_Laiopua\2700_S-2.dwg 9:06am – Mon, 04/08/13

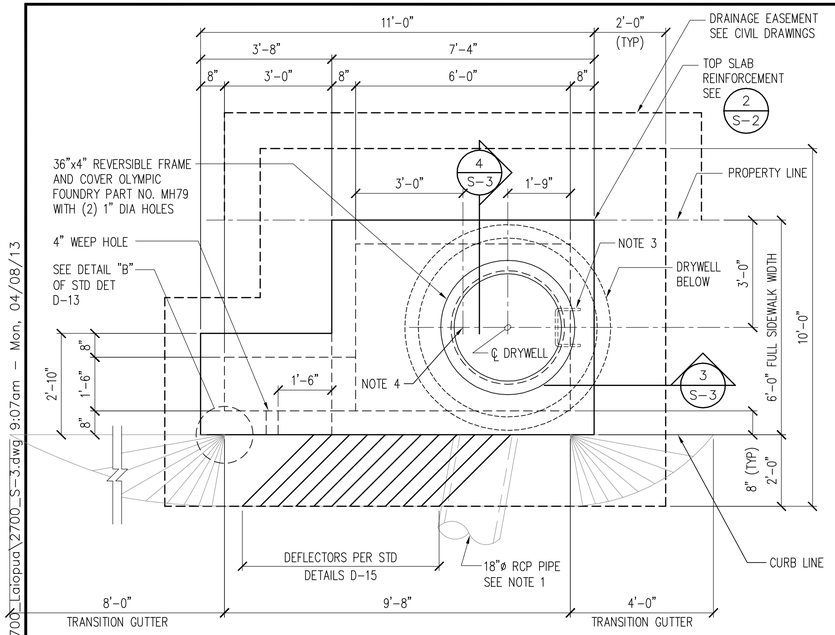

1 S-3 **PLAN - MODIFIED CATCH BASIN WITH DRYWELL**
SCALE: 1/2" = 1'-0"

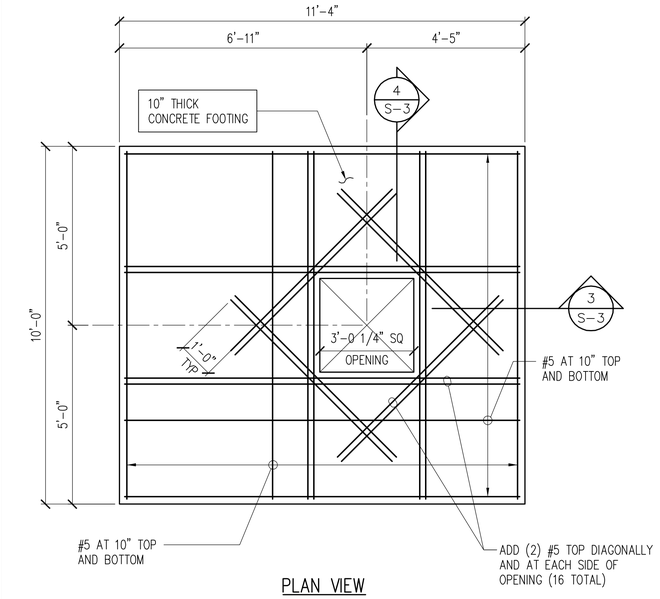

2 S-3 **PLAN - CATCH BASIN FOOTING**
SCALE: 1/2" = 1'-0"

NOTES:

1. REFERENCE CIVIL DRAWINGS FOR THE ELEVATION OF CATCH BASINS, AND LOCATIONS, NUMBER AND SIZE OF PIPES. OPENING OF OUTLET PIPE SHALL BE ROUNDED WITH MINIMUM RADIUS OF 0.15 TIMES PIPE DIAMETER.
2. PROVIDE 2 CUBIC FEET OF CRUSHED ROCK, ASTM SIZE #9 ROCK SAND AT WEEP HOLE.
3. PROVIDE TYPE "B" MANHOLE RUNGS AT 16" OC PER STANDARD DETAILS D-27.
4. REFERENCE STATIONING AT THE CENTER OF CATCH BASIN BOX.
5. CATCH BASIN FOOTING BASE SHALL BE COMPACTED TO A MINIMUM OF 95% RELATIVE DENSITY BEFORE CASTING FOOTING.

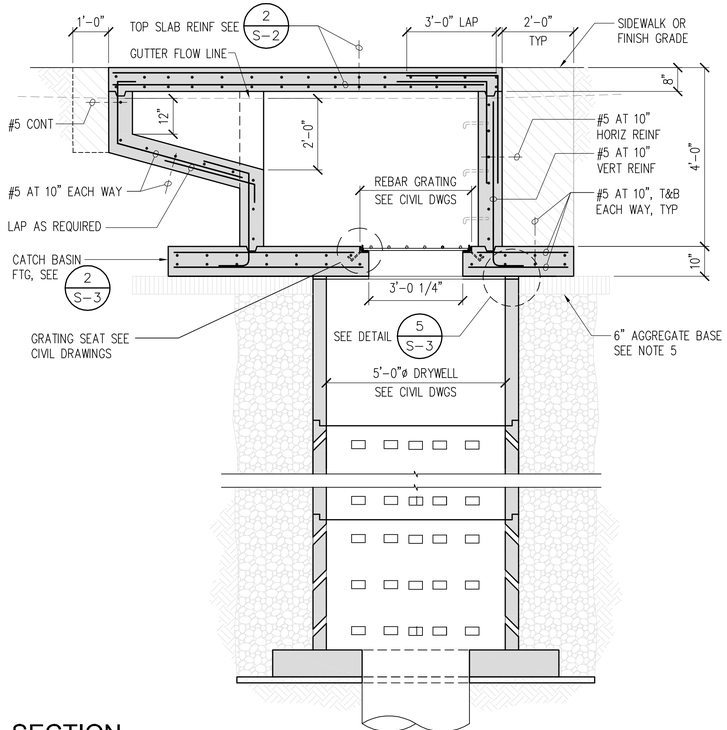

3 S-3 **SECTION**
SCALE: 1/2" = 1'-0"

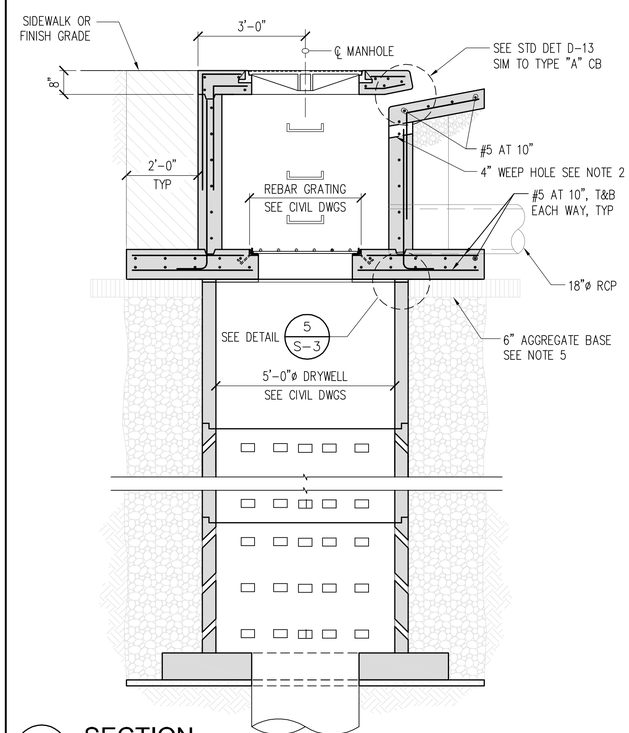

4 S-3 **SECTION**
SCALE: 1/2" = 1'-0"

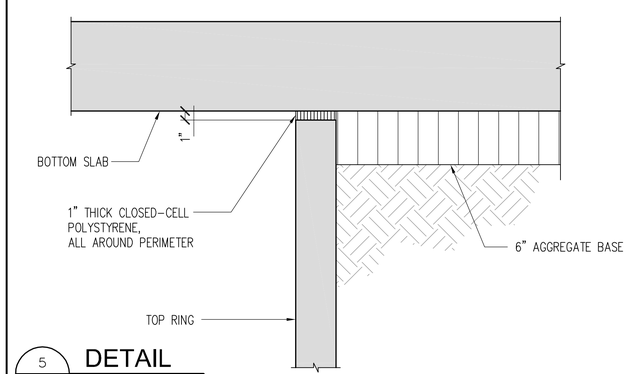

5 S-3 **DETAIL**
NOT TO SCALE

0' 1' 2' 3' 4' 5' 6'
1/2" = 1'-0"

REVISION	DATE	DESCRIPTION	MADE BY	APPROVED

KEN KAZUO HAYASHIDA
LICENSED PROFESSIONAL ENGINEER
No. 6818-S
HAWAII, U.S.A.

EXPIRATION DATE OF THE LICENSE 4/30/2014
THIS WORK WAS PREPARED BY ME OR UNDER MY SUPERVISION

DEPARTMENT OF HAWAIIAN HOME LANDS
LA'I'ŌPUA VILLAGE 4
PHASE 1 – 'ĀKAU
TAX MAP KEY: (3) 7-4-21:10 & POR. 12
KAILUA-KONA, NORTH KONA, HAWAII

MODIFIED CATCH BASIN WITH DRYWELL

Approved:

COUNTY ENGINEER, DPW, COUNTY OF HAWAII DATE

FILE	POCKET	FOLDER	NO.

Initials P:\2651-2700\2700 DHHL - Laiopua Villages - 4 Subdivision\Drawings\Structural\AutoCAD_format\2013-04-05_2700_Laiopua\2700_S-3.dwg 9:07am - Mon, 04/08/13

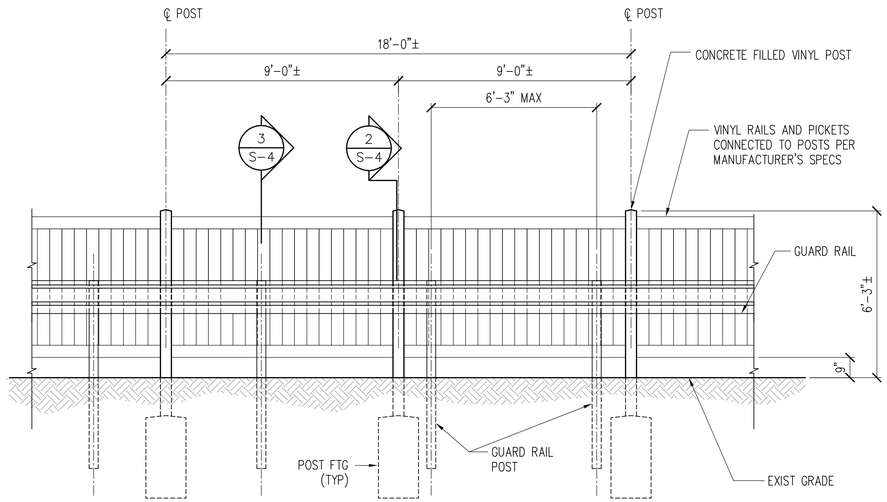

1 S-4 **ELEVATION - PRIVACY FENCE**
SCALE: 3/8" = 1'-0"

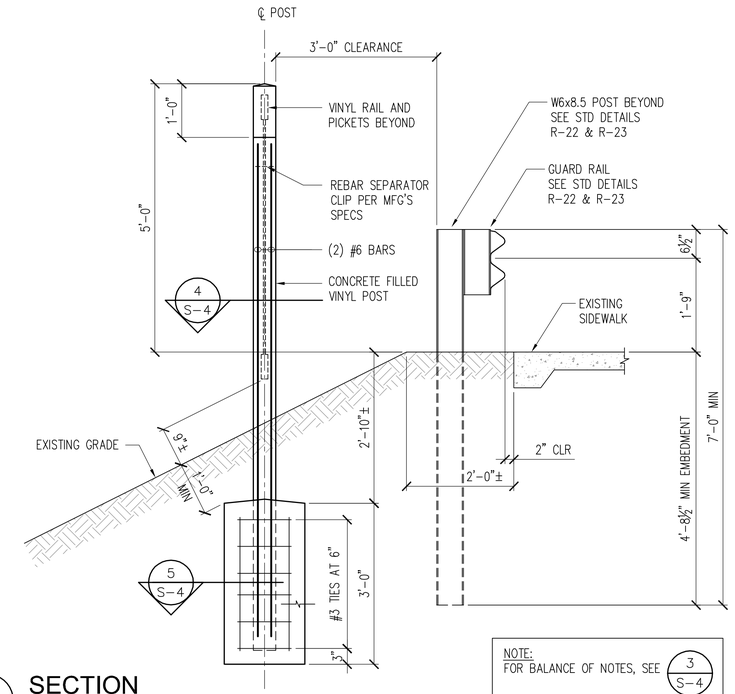

2 S-4 **SECTION**
SCALE: 3/4" = 1'-0"

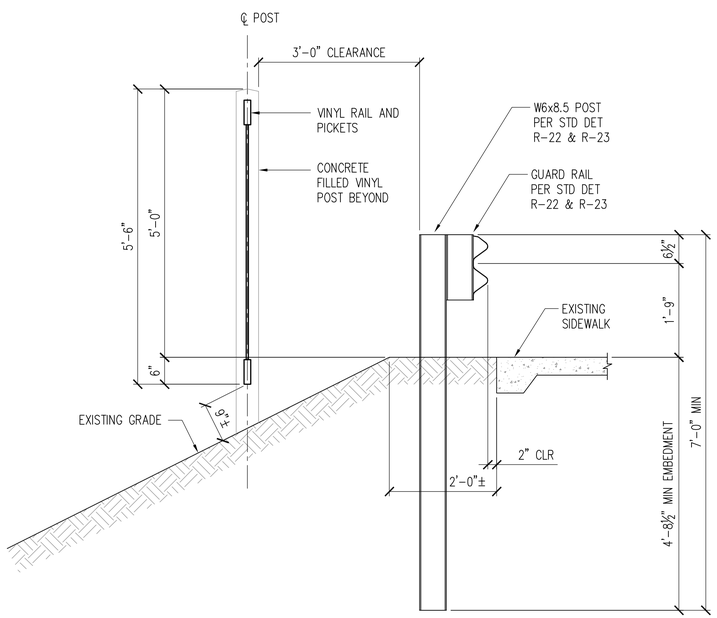

3 S-4 **SECTION**
SCALE: 3/4" = 1'-0"

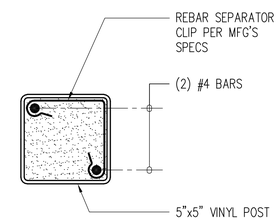

4 S-4 **SECTION**
NOT TO SCALE

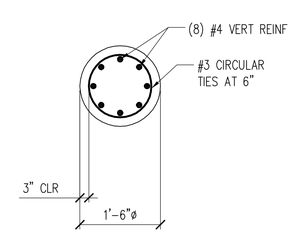

5 S-4 **SECTION**
SCALE: 3/4" = 1'-0"

0' 1' 2' 3' 4'
3/4" = 1'-0"

0' 1' 2' 4' 6' 8'
3/8" = 1'-0"

REVISION	DATE	DESCRIPTION	MADE BY	APPROVED

KEN KAZUO HAYASHIDA
LICENSED PROFESSIONAL ENGINEER
No. 6818-S
HAWAII, U.S.A.

EXPIRATION DATE OF THE LICENSE 4/30/2014
THIS WORK WAS PREPARED BY ME OR UNDER MY SUPERVISION

DEPARTMENT OF HAWAIIAN HOME LANDS
LA'I'ŌPUA VILLAGE 4
PHASE 1 – 'ĀKAU
TAX MAP KEY: (3) 7-4-21:10 & POR. 12
KAILUA-KONA, NORTH KONA, HAWAII

PRIVACY FENCE

Approved:

COUNTY ENGINEER, DPW, COUNTY OF HAWAII DATE

SHEET S-4 OF 46 SHEETS

FILE	POCKET	FOLDER	NO.

Initials P:\2651-2700\2700 DHHL - Laiopua Villages - 4 Subdivision\Drawings\Structural\AutoCAD_format\2013-04-05_2700_Laiopua\2700_S-4.dwg 9:06am - Mon, 04/08/13

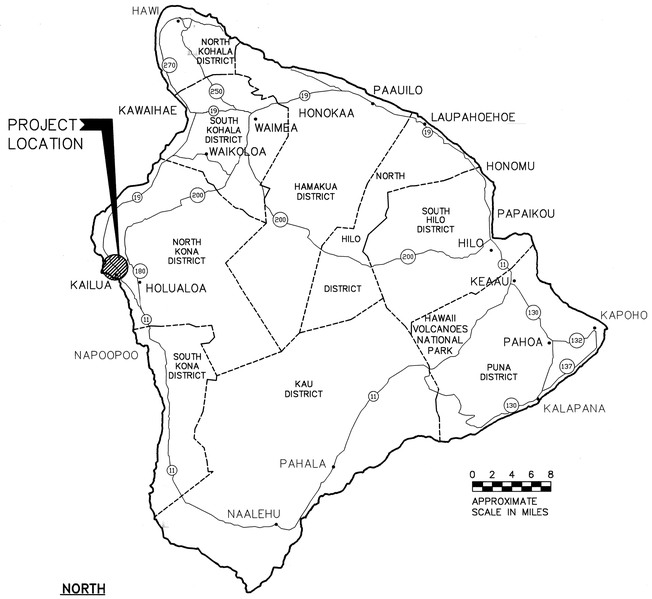

NORTH

ISLAND OF HAWAII

NOT TO SCALE

GENERAL NOTES:

1. PROVIDE 5' MINIMUM CLEAR BETWEEN STREET LIGHT POLES & SEWER LATERALS.
2. PROVIDE 3' MINIMUM CLEAR BETWEEN PULLBOXES & SEWER LATERALS.
3. PROVIDE 6' MINIMUM CLEAR BETWEEN TRANSFORMER PADS & SEWER LATERALS (DO NOT STRADDLE).
4. PROVIDE 3' MINIMUM CLEAR BETWEEN DUCTLINES & SEWER LINES.
5. CONTRACTOR SHALL VERIFY SEWER LATERAL LOCATIONS WITH CIVIL SHEETS.
6. PROVIDE 8' MINIMUM HORIZONTAL CLEAR & 18" VERTICAL CLEAR BETWEEN WATER LINES & ALL ELECTRICAL SYSTEMS.
7. CONTRACTOR SHALL BE RESPONSIBLE TO ARRANGE WITH THE GENERAL CONTRACTOR TO IDENTIFY THE LOCATIONS OF CIVIL SITE UTILITIES, DRIVEWAYS, ETC. PRIOR TO ELECTRICAL CONTRACTORS LAYOUT OF ELECTRIC, TELEPHONE, STREET LIGHT, TRAFFIC SIGNAL, AND CATV SYSTEMS.

ELECTRICAL SYMBOLS

SYMBOL	DESCRIPTION	SYMBOL	DESCRIPTION
	STREET LIGHT, 90W LED LUMINAIRE, GALVANIZED STEEL POLE & BRACKET ARM, SEE DETAIL A/E-10		HELCO 2' X 3' PULLBOX
			HELCO 3' X 5' HANDHOLE
			HELCO 4' X 6' HANDHOLE
			HELCO 5' X 7' HANDHOLE
	EXISTING STREET LIGHT & BRACKET ARM TO REMAIN		EXST HELCO 5' X 7' MANHOLE
			EXST HELCO 6' X 11' MANHOLE
1	NOTE SYMBOL, SEE PLAN FOR NOTES		
			CATV POWER SUPPLY. SEE DETAIL ON SHEET E-13
	GROUND ROD, 5/8" DIA. X 8'-0" (BMZ)		SIC COM 13" X 24" x 30" HANDHOLE, SEE DETAIL ON SHEET E-14
	BREAKLINE TO BEGIN & END DUCT SECTION TYPE		SIC COM 30" X 48" HANDHOLE, SEE DETAIL ON SHEET E-14
	ELECTRIC/SIGNAL DUCTLINE WITH DESIGNATORS;		SIC COM 3' X 5' HANDHOLE, SEE DETAIL ON SHEET E-14
	INDICATES TYPE "A" DUCT SECTION WITH "2-2E" DUCTS.		SIC COM 4' X 6' HANDHOLE, SEE DETAIL ON SHEET E-15
A 2-2E	SEE SHEET E-8 & E-9 FOR DUCT SECTIONS AND		5/8" x 8' GROUND ROD
	CONDUIT SCHEDULES		EXST HAWAIIAN TELCOM HANDHOLE
	STUB, CAP, & MARK CONDUIT(S) WITH CONCRETE		EXST HAWAIIAN TELCOM MANHOLE
	MARKER, SEE DETAIL F/E-11		EXST SANDWICH ISLES MANHOLE
	SAWCUT EXST. A.C. PAVEMENT, CONC. SIDEWALK, CURB & GUTTER		
	PRIOR TO TRENCH EXCAVATION. RESTORE SUBBASE, BASECOURSE,		STREET LIGHT PULLBOX, SEE DETAIL B/E-12
	PAVEMENT, CONC. SIDEWALK, CURB & GUTTER PER CITY		
	REQUIREMENTS, THICKNESS SHALL MATCH EXST ROAD DESIGN		HELCO TRANSFORMER PAD LOT, 6' X 7' EASEMENT & CONCRETE PAD,
E	PRIVATE ELECTRICAL DUCTS & WIRING		SEE DETAIL E/E-11
L	STREET LIGHT DUCTS & WIRING		
e	EXST. UNDERGROUND ELEC/SIGNAL DUCTLINE & WIRING		HELCO SWITCHING EASEMENT PAD LOT, SEE DETAIL ON SHEET E-12
l	EXST. UNDERGROUND STREET LIGHT CABLES & CONDUITS		EXST. HELCO SWITCHING EASEMENT PAD LOT
1	NON METERED STREET LIGHT I.D. TAG, 1 = LIGHT NO., SEE DETAIL C/E-10		

CONDUIT SCHEDULE

ITEM	DESCRIPTION	ITEM	DESCRIPTION
2E	HAWAII ELECTRIC LIGHT CO. 1-2"C	8-1S	SANDWICH ISLES COMM UD(2x4-1")
2-2E	HAWAII ELECTRIC LIGHT CO. 2-2"C	6-1S	SANDWICH ISLES COMM UD(3x2-1")
3-2E	HAWAII ELECTRIC LIGHT CO. 3-2"C	4-1S	SANDWICH ISLES COMM UD(2x2-1")
6-2E	HAWAII ELECTRIC LIGHT CO. 6-2"C	2-1S	SANDWICH ISLES COMM UD(1x2-1")
3E	HAWAII ELECTRIC LIGHT CO. 1-3"C	2-4S	SANDWICH ISLES COMM UD(1x2-4")
2-3E	HAWAII ELECTRIC LIGHT CO. 2-3"C	3-4S	SANDWICH ISLES COMM UD(3x1-4")
2-5E	HAWAII ELECTRIC LIGHT CO. 2-5"C	4-4S	SANDWICH ISLES COMM UD(2x2-4")
		6-4S	SANDWICH ISLES COMM UD(3x2-4")
3P	PRIVATE POWER 3"C		
		3V	CATV 1-3"C
1 1/4	STREET LIGHT 1-1 1/4"C		
1 1/2	STREET LIGHT 1-1 1/2"C		

APPROVED BY:

SANDWICH ISLES COMMUNICATIONS, INC DATE

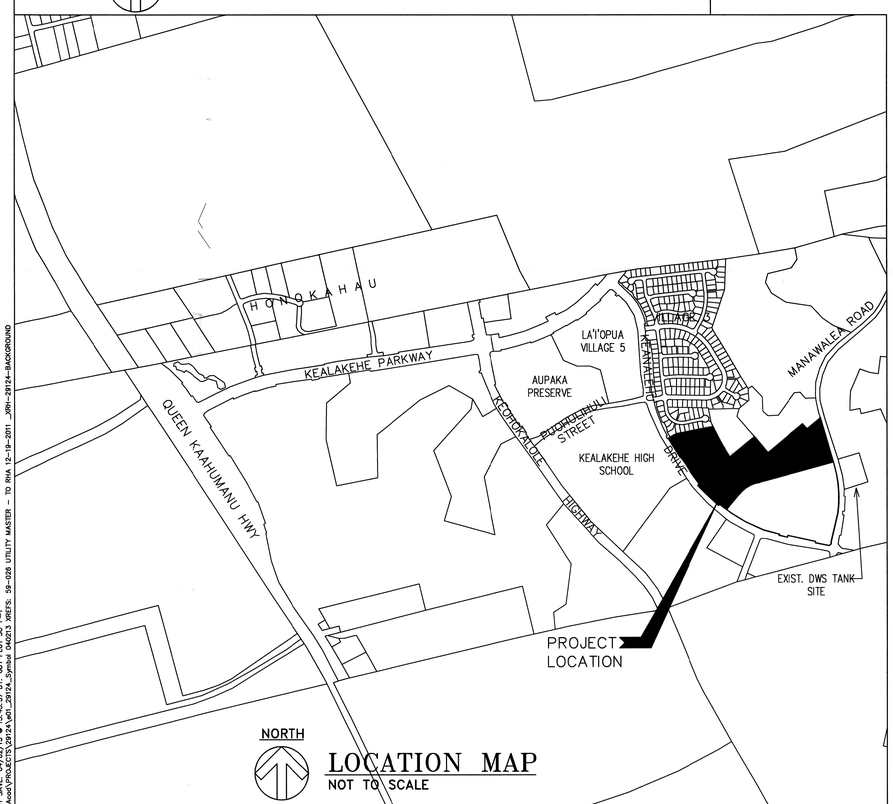

NORTH

LOCATION MAP

NOT TO SCALE

NOTES FOR CONSTRUCTION

a. THE LOCATION OF OVERHEAD AND UNDERGROUND FACILITIES SHOWN ON THE PLANS ARE FROM EXISTING RECORDS WITH VARYING DEGREES OF ACCURACY AND ARE NOT GUARANTEED AS SHOWN. THE CONTRACTOR SHALL EXERCISE EXTREME CAUTION WHENEVER CONSTRUCTION CROSSES OR IS IN PROXIMITY OF UNDERGROUND LINES AND SHALL MAINTAIN ADEQUATE CLEARANCE WHEN OPERATING EQUIPMENT UNDER ANY OVERHEAD LINES.

b. THE CONTRACTOR IS TO COMPLY WITH THE DIRECTIONS OF THE STATE OF HAWAII OCCUPATIONAL SAFETY AND HEALTH LAW (DOSH).

c. WHEN TRENCH EXCAVATION IS ADJACENT TO EXISTING STRUCTURES OR FACILITIES, THE CONTRACTOR IS RESPONSIBLE FOR PROPERLY SHEETING AND BRACING THE EXCAVATION AND STABILIZING THE EXISTING GROUND TO RENDER IT SAFE AND SECURE FROM POSSIBLE SLIDES, CAVE-INS AND SETTLEMENT, AND FOR PROPERLY SUPPORTING EXISTING STRUCTURES AND FACILITIES WITH BEAMS, STRUTS OR UNDERPINNING TO FULLY PROTECT IT FROM DAMAGE.

d. AS REQUIRED BY THE CITY AND COUNTY OF HONOLULU, THE CONTRACTOR SHALL PROVIDE OFF-DUTY POLICE OFFICERS TO CONTROL THE FLOW OF TRAFFIC.

e. WHERE PEDESTRIAN WALKWAYS EXIST, SUCH WALKWAYS SHALL BE MAINTAINED IN PASSABLE CONDITION OR OTHER FACILITIES FOR PEDESTRIANS SHALL BE PROVIDED. PASSAGE BETWEEN WALKWAYS AT INTERSECTIONS SHALL LIKEWISE BE PROVIDED.

f. DRIVEWAYS SHALL BE KEPT OPEN UNLESS THE OWNERS OF THE PROPERTY USING THESE RIGHT-OF-WAYS ARE OTHERWISE PROVIDED FOR SATISFACTORILY.

g. THE UNDERGROUND PIPES, CABLES OR DUCTLINES KNOWN BY THE ENGINEER TO EXIST FROM HIS SEARCH OF RECORDS ARE INDICATED ON THE PLANS. THE CONTRACTOR SHALL VERIFY THE LOCATION AND DEPTH OF THE FACILITIES AND EXERCISE PROPER CARE IN EXCAVATING THE AREA. WHEREVER CONNECTIONS OF NEW UTILITIES TO EXISTING UTILITIES ARE SHOWN ON THE PLANS, THE CONTRACTOR SHALL EXPOSE THE EXISTING LINES AT THE PROPOSED CONNECTIONS TO VERIFY THEIR LOCATIONS AND DEPTHS PRIOR TO EXCAVATION FOR THE NEW LINES.

h. FOR CONSTRUCTION OF HELCO FACILITIES, CONTRACTOR TO REFER TO HELCO DRAWING 12-E-378. CONTACT KELLY IKEDA AT HELCO (1-808-327-0515) FOR ANY QUESTIONS OR COMMENTS OF HELCO FACILITIES.

REVISION	DATE	DESCRIPTION	MADE BY	APPROVED

RONALD N. S. HO & ASSOCIATES, INC.
Electrical Engineers

STEVEN H. SAKAI
LICENSED PROFESSIONAL ENGINEER
No. 7637-E
HAWAII, U.S.A.

THIS WORK WAS PREPARED BY ME OR UNDER MY SUPERVISION

04/30/14
EXPIRATION DATE OF THE LICENSE

DEPARTMENT OF HAWAIIAN HOME LANDS
LA'I'OPUA VILLAGE 4
PHASE 1 – 'AKAU
TAX MAP KEY: (3) 7-4-21:10 & POR. 12
KAILUA-KONA, NORTH KONA, HAWAII

SYMBOL LIST

Approved:

COUNTY ENGINEER, DPW, COUNTY OF HAWAII DATE

SHEET E-1 OF 46 SHEETS

FILE	POCKET	FOLDER	NO.

LAST SAVE: 04/02/13 @ 15:43:57 BY: IGT PLOT SC 1=1'
Z:\Lead\PROJECTS\2124\WO_2124_Symbol 040213.DWG; 59-028 UTILITY MASTER – TO RHA 12-19-2011 JOH-2012-BACKGROUND

HAWAII ELECTRIC LIGHT COMPANY (HELCO) NOTES

1. LOCATION OF HELCO FACILITIES

THE LOCATION OF HELCO'S OVERHEAD AND UNDERGROUND FACILITIES SHOWN ON THE PLANS ARE FROM EXISTING RECORDS WITH VARYING DEGREES OF ACCURACY AND ARE NOT GUARANTEED AS SHOWN. THE CONTRACTOR SHALL VERIFY IN THE FIELD THE LOCATIONS OF THE FACILITIES AND SHALL EXERCISE PROPER CARE IN EXCAVATING AND WORKING IN THE AREA. WHEREVER CONNECTIONS OF NEW UTILITIES TO EXISTING UTILITIES AND UTILITY CROSSINGS ARE SHOWN, THE CONTRACTOR SHALL EXPOSE THE EXISTING LINES AT THE PROPOSED CONNECTIONS AND CROSSINGS TO VERIFY THE DEPTHS PRIOR TO EXCAVATION FOR THE NEW LINES. THE CONTRACTOR SHALL BE RESPONSIBLE FOR ANY DAMAGES TO HELCO'S FACILITIES WHETHER SHOWN OR NOT SHOWN ON THE PLANS.

2. COMPLIANCE WITH HAWAII OCCUPATIONAL SAFETY AND HEALTH LAWS

THE CONTRACTOR SHALL COMPLY WITH THE STATE OF HAWAII'S OCCUPATIONAL SAFETY AND HEALTH LAWS AND REGULATIONS, INCLUDING WITHOUT LIMITATION, THOSE RELATED TO WORKING ON OR NEAR EXPOSED OR ENERGIZED ELECTRICAL LINES AND EQUIPMENT.

3. EXCAVATION PERMIT

THE CONTRACTOR SHALL OBTAIN AN EXCAVATION PERMIT FROM THE COUNTY TWO WEEKS PRIOR TO STARTING CONSTRUCTION. PLEASE REFER TO OUR REQUEST NUMBER AT THAT TIME.

4. CAUTION!!! ELECTRICAL HAZARD!!!

EXISTING HELCO OVERHEAD AND UNDERGROUND LINES ARE ENERGIZED AND WILL REMAIN ENERGIZED DURING CONSTRUCTION UNLESS PRIOR SPECIAL ARRANGEMENTS HAVE BEEN MADE WITH HELCO. ONLY HELCO PERSONNEL ARE TO HANDLE THESE ENERGIZED LINES AND ERECT TEMPORARY GUARDS TO PROTECT THESE LINES FROM DAMAGE. THE CONTRACTOR SHALL WORK CAUTIOUSLY AT ALL TIMES TO AVOID ACCIDENTS AND DAMAGE TO EXISTING HELCO FACILITIES, WHICH CAN RESULT IN ELECTROCUTION.

5. OVERHEAD LINES

STATE LAW REQUIRES THAT A WORKER AND THE LONGEST OBJECT HE OR SHE MAY CONTACT CANNOT COME CLOSER THAN A MINIMUM RADIAL CLEARANCE OF 10 FEET WHEN WORKING CLOSE TO OR UNDER ANY OVERHEAD LINES RATED 50KV AND BELOW. FOR EACH ADDITIONAL 1KV ABOVE 50KV, AN ADDITIONAL 0.4 INCH SHALL BE ADDED TO THE 10- FOOT CLEARANCE REQUIREMENT. THE PRECEDING INFORMATION ON LINE CLEARANCE REQUIREMENTS IS PROVIDED AS A CONVENIENCE AND IT IS THE CONTRACTOR'S RESPONSIBILITY TO BE INFORMED OF AND COMPLY WITH ANY REVISIONS OR AMENDMENTS TO THE LAW.

SHOULD THE CONTRACTOR ANTICIPATE THAT HIS WORK WILL RESULT IN THE NEED TO ENCROACH WITHIN THE MINIMUM REQUIRED CLEARANCE AT ANY TIME, THE CONTRACTOR SHALL NOTIFY HELCO AT LEAST FOUR (4) WEEKS PRIOR TO THE PLANNED ENCROACHMENT SO THAT, IF FEASIBLE, THE NECESSARY PROTECTIONS (E.G. RELOCATE, DE- ENERGIZE, OR BLANKET HELCO LINES) CAN BE PUT IN PLACE. HELCO'S COST OF SAFEGUARDING ITS LINES WILL BE CHARGED TO THE CONTRACTOR.

CONTACT HELCO'S CUSTOMER INSTALLATIONS DEPARTMENT AT 969-6666 FOR ASSISTANCE IN IDENTIFYING AND SAFEGUARDING OVERHEAD POWER LINES.

REFER TO SECTION X OF HELCO'S ELECTRIC SERVICE INSTALLATION MANUAL FOR ADDITIONAL GUIDELINES WHEN WORKING AROUND HELCO'S FACILITIES. A COPY MAY BE OBTAINED FROM HELCO'S CUSTOMER INSTALLATIONS DEPARTMENT.

6. POLE BRACING

A MINIMUM CLEARANCE OF 10 FEET MUST BE MAINTAINED WHEN EXCAVATING AROUND UTILITY POLES AND/OR THEIR ANCHOR SYSTEM TO PREVENT WEAKENING OR POLE SUPPORT FAILURE. SHOULD WORK REQUIRE EXCAVATING WITHIN 10 FEET OF A POLE AND/OR ITS ANCHOR SYSTEM, THE CONTRACTOR SHALL PROTECT, SUPPORT, SECURE, AND TAKE ALL OTHER PRECAUTIONS TO PREVENT DAMAGE TO OR LEANING OF THESE POLES. THE CONTRACTOR IS RESPONSIBLE FOR ALL ASSOCIATED COSTS TO BRACE, REPAIR, OR STRAIGHTEN POLES. ALL MEANS OF STRUCTURAL SUPPORT FOR THE POLE PROPOSED BY THE CONTRACTOR SHALL FIRST BE REVIEWED BY HELCO BEFORE IMPLEMENTATION. FOR POLE BRACING INSTRUCTIONS, THE CONTRACTOR SHALL CALL THE HELCO CONSTRUCTION AND MAINTENANCE DEPT., SUPERINTENDENT A MINIMUM OF TWO (2) WEEKS IN ADVANCE.

7. UNDERGROUND LINES

THE CONTRACTOR SHALL EXERCISE EXTREME CAUTION WHENEVER CONSTRUCTION CROSSES OR IS IN CLOSE PROXIMITY OF UNDERGROUND LINES. HELCO'S EXISTING ELECTRICAL CABLES ARE ENERGIZED AND WILL REMAIN ENERGIZED DURING CONSTRUCTION. ONLY HELCO PERSONNEL ARE TO BREAK INTO EXISTING HELCO FACILITIES, HANDLE THESE CABLES, AND ERECT TEMPORARY GUARDS TO PROTECT THESE CABLES FROM DAMAGE. THE COST OF HELCO'S ASSISTANCE IN PROVIDING PROPER SUPPORT AND PROTECTION OF ITS UNDERGROUND LINES WILL BE CHARGED TO THE CONTRACTOR. SPECIAL PRECAUTIONS ARE REQUIRED WHEN EXCAVATING NEAR HELCO'S 62KV UNDERGROUND LINES (SEE HELCO INSTRUCTIONS TO CONSULTANTS/CONTRACTORS ON "EXCAVATION NEAR HELCO'S UNDERGROUND 62KV LINES" FOR DETAILED REQUIREMENTS).

FOR VERIFICATION OF UNDERGROUND LINES, THE CONTRACTOR SHALL CALL ONE-CALL A MINIMUM OF 72 HOURS IN ADVANCE.

FOR ASSISTANCE IN PROVIDING PROPER SUPPORT AND PROTECTION OF THESE LINES, THE CONTRACTOR SHALL CALL HELCO'S CONSTRUCTION & MAINTENANCE DEPT., SUPERINTENDENT, A MINIMUM OF TWO (2) WEEKS IN ADVANCE.

8. UNDERGROUND FUEL PIPELINES

THE CONTRACTOR SHALL EXERCISE EXTREME CAUTION WHENEVER CONSTRUCTION CROSSES OR IS IN CLOSE PROXIMITY OF HELCO'S UNDERGROUND FUEL OIL PIPELINES. SPECIAL PRECAUTIONS ARE REQUIRED WHEN EXCAVATING NEAR HELCO'S UNDERGROUND FUEL OIL PIPELINES (SEE HELCO INSTRUCTIONS TO CONSULTANTS/CONTRACTORS ON "EXCAVATION NEAR HELCO'S UNDERGROUND FUEL PIPELINES" FOR DETAILED REQUIREMENTS).

9. EXCAVATIONS

WHEN TRENCH EXCAVATION IS ADJACENT TO OR BENEATH HELCO'S EXISTING STRUCTURES OR FACILITIES, THE CONTRACTOR IS RESPONSIBLE FOR:

a) SHEETING AND BRACING THE EXCAVATION AND STABILIZING THE EXISTING GROUND TO RENDER IT SAFE AND SECURE AND TO PREVENT POSSIBLE SLIDES, CAVE-INS, AND SETTLEMENTS.
b) PROPERLY SUPPORTING EXISTING STRUCTURES OR FACILITIES WITH BEAMS, STRUTS, OR UNDER-PINNINGS TO FULLY PROTECT IT FROM DAMAGE.
c) BACKFILLING WITH PROPER BACKFILL MATERIAL INCLUDING SPECIAL THERMAL BACKFILL WHERE EXISTING (REFER TO ENGINEERING DEPARTMENT FOR THERMAL BACKFILL SPECIFICATIONS).

10. RELOCATION OF HELCO FACILITIES

ANY WORK REQUIRED TO RELOCATE OR MODIFY HELCO FACILITIES SHALL BE DONE BY HELCO, OR BY THE CONTRACTOR UNDER HELCO'S SUPERVISION. THE CONTRACTOR SHALL BE RESPONSIBLE FOR ALL COORDINATION, AND SHALL PROVIDE NECESSARY SUPPORT FOR HELCO'S WORK, WHICH MAY INCLUDE, BUT NOT BE LIMITED TO, EXCAVATION AND BACKFILL, PERMITS AND TRAFFIC CONTROL, BARRICADING, AND RESTORATION OF PAVEMENT, SIDEWALKS, AND OTHER FACILITIES.

ALL COSTS ASSOCIATED WITH ANY RELOCATION OR MODIFICATION (EITHER TEMPORARY OR PERMANENT) FOR THE CONVENIENCE OF THE CONTRACTOR, OR TO ENABLE THE CONTRACTOR TO PERFORM HIS WORK IN A SAFE AND EXPEDITIOUS MANNER IN FULFILLING HIS CONTRACT OBLIGATIONS SHALL BE BORNE BY THE CONTRACTOR.

11. CONFLICTS

ANY REDESIGN OR RELOCATION OF HELCO'S FACILITIES NOT SHOWN ON THE PLANS MAY BE CAUSE FOR LENGTHY DELAYS. THE CONTRACTOR ACKNOWLEDGES THAT HELCO IS NOT RESPONSIBLE FOR ANY DELAY OR DAMAGE THAT MAY ARISE AS A RESULT OF ANY CONFLICTS DISCOVERED OR IDENTIFIED WITH RESPECT TO THE LOCATION OR CONSTRUCTION OF HELCO'S ELECTRICAL FACILITIES IN THE FIELD, REGARDLESS OF WHETHER THE CONTRACTOR HAS MET THE REQUESTED MINIMUM ADVANCE NOTICES. IN ORDER TO MINIMIZE ANY DELAY OR IMPACT ARISING FROM SUCH CONFLICTS, HELCO SHOULD BE NOTIFIED IMMEDIATELY UPON DISCOVERY OR IDENTIFICATION OF SUCH CONFLICT.

12. DAMAGE TO HELCO FACILITIES

THE CONTRACTOR SHALL BE RESPONSIBLE FOR THE PROTECTION OF ALL HELCO SURFACE AND SUBSURFACE UTILITIES AND SHALL BE RESPONSIBLE FOR ANY DAMAGES TO HELCO'S FACILITIES AS A RESULT OF HIS OPERATIONS. THE CONTRACTOR SHALL IMMEDIATELY REPORT SUCH DAMAGES TO HELCO'S TROUBLE DISPATCHER. REPAIR WORK SHALL BE DONE BY HELCO OR BY THE CONTRACTOR UNDER HELCO'S SUPERVISION COSTS FOR DAMAGES TO HELCO'S FACILITIES SHALL BE BORNE BY THE CONTRACTOR.

IN CASE OF DAMAGE OR SUSPECTED DAMAGE TO HELCO'S FUEL PIPELINE, THE CONTRACTOR SHALL IMMEDIATELY NOTIFY HELCO'S TROUBLE DESK (969-6666) (A 24-HOUR NUMBER) SO HELCO PERSONNEL CAN SECURE THE DAMAGED SECTION AND REPORT ANY OIL SPILLS TO THE PROPER AUTHORITIES. ALL COSTS ASSOCIATED WITH THE DAMAGE, REPAIR, AND OIL SPILL CLEANUP SHALL BE BORNE BY THE CONTRACTOR.

13. HELCO STAND-BY PERSONNEL

THE CONTRACTOR MAY REQUEST HELCO TO PROVIDE AN INSPECTOR TO STAND-BY DURING CONSTRUCTION NEAR HELCO'S FACILITIES. THE COST OF SUCH INSPECTION WILL BE CHARGED TO THE CONTRACTOR.

THE CONTRACTOR SHALL CALL THE HELCO CONSTRUCTION AND MAINTENANCE DEPT., SUPERINTENDENT A MINIMUM OF 5 WORKING DAYS IN ADVANCE TO ARRANGE FOR HELCO STAND-BY PERSONNEL.

14. CLEARANCES

THE FOLLOWING CLEARANCES SHALL BE MAINTAINED BETWEEN HELCO'S DUCTLINE AND ALL ADJACENT STRUCTURES (CHARTED AND UNCHARTED) IN THE TRENCH:

STRUCTURE TYPE	MINIMUM CLEARANCE(INCHES)
WATER LINES, PARALLEL	36 (A)
WATER LINES, CROSSING	12 (B)
SEWER LINES, PARALLEL	36 (C)
SEWER LINES, CROSSING	24 (D)
DRAIN LINES, PARALLEL	12
DRAIN LINES, CROSSING	6 (E)
ELECTRICAL AND GAS LINES, PARALLEL	12
ELECTRICAL AND GAS LINES, CROSSING	12
TELEPHONE LINES, PARALLEL	6 (E)
TELEPHONE LINES, CROSSING	6 (E)
CHEVRON OIL LINES, PARALLEL	36
CHEVRON OIL LINES, CROSSING	48 BELOW OIL LINE (F)

A. THE MINIMUM HORIZONTAL CLEARANCES TO WATER LINES PARALLEL TO ELECTRICAL DUCTLINES MUST BE INCREASED TO 60 INCHES IF THE WATER LINE IS GREATER THAN 16 INCHES IN DIAMETER
B. THE MINIMUM VERTICAL CLEARANCES TO WATER LINES CROSSING ELECTRICAL DUCTLINES CAN BE REDUCED TO 6 INCHES IF THE ELECTRICAL DUCTLINE STRUCTURE IS CONCRETE ENCASED AND IS BELOW THE WATER LINE AND THE WATER LINE IS LESS THAN 16 INCHES IN DIAMETER.
C. A MINIMUM HORIZONTAL CLERANCE OF 36 INCHES IS REQUIRED BETWEEN NEW HANDHOLES AND EXISTING SEWER LATERALS.
D. THE MINIMUM VERTICAL CLEARANCES TO SEWER PIPES CROSSING ELECTRICAL DUCTLINES CAN BE REDUCED TO 12 INCHES IF THE SEWER PIPE IS JACKETED IN CONCRETE.
E. THE MINIMUM CLEARANCES SHALL BE INCREASED TO 12 INCHES IF THE ELECTRICAL DUCTLINE IS DIRECT BURIED.
F. THE MINIMUM VERTICAL CLEARANCES TO OIL LINES CROSSING ELECTRICAL DUCTLINES CAN BE REDUCED TO 24 INCHES BELOW OIL LINES IF THE CROSSINGS ARE ENCASED IN 6 INCHES OF CONCRETE.
G. THE CONTRACTOR SHALL NOTIFY THE CONSTRUCTION MANAGER & HELCO OF ANY HEAT SOURCES (POWER CABLE DUCT BANK, STEAMLINE, ETC.) ENCOUNTERED THAT ARE NOT PROPERLY IDENTIFIED ON THE DRAWING.

THE FOLLOWING CLEARANCE SHALL BE MAINTAINED BETWEEN HELCO'S FUEL OIL PIPELINES AND ALL ADJACENT STRUCTURES: 24-INCHES, PARALLEL OR CROSSING. THE MINIMUM CLEARANCE CAN BE REDUCED TO 12 INCHEL (PARALLEL AND BELOW ONLY) IF THE STRUCTURE IS JACKETED IN CONCRETE.

15. INDEMNITY

THE CONTRACTOR SHALL INDEMNIFY, DEFEND AND HOLD HARMLESS HELCO FROM AND AGAINST ALL LOSSES, DAMAGES, CLAIMS, AND ACTIONS, INCLUDING BUT NOT LIMITED TO REASONABLE ATTORNEY'S FEES AND COSTS BASED UPON OR ARISING OUT OF DAMAGE TO PROPERTY OR INJURIES TO PERSONS, OR OTHER TORTIOUS ACTS CAUSED OR CONTRIBUTED TO BY CONTRACTOR OR ANYONE ACTING UNDER ITS DIRECTION OR CONTROL OR ON ITS BEHALF; PROVIDED CONTRACTOR'S INDEMNITY SHALL NOT BE APPLICABLE TO ANY LIABILITY BASED UPON THE SOLE NEGLIGENCE OF HELCO.

16. SCHEDULE

CONTRACTOR SHALL FURNISH HIS CONSTRUCTION SCHEDULE 22 WORKING DAYS PRIOR TO STARTING WORK ON HELCO FACILITIES. CONTRACTOR SHALL GIVE HELCO, IN WRITING 30 WORKING DAYS NOTICE TO PROCEED WITH HELCO'S PORTION OF WORK.

17. AUTHORITY

ALL CONSTRUCTION, RESTORATION WORK, AND INSPECTION SHALL BE SUBJECT TO WHICHEVER GOVERNMENTAL AGENCY HAS AUTHORITY OVER THE WORK.

18. SPECIFICATIONS

CONSTRUCTION OF HELCO'S UNDERGROUND FACILITIES SHALL BE CONSTRUCTED IN ACCORDANCE WITH THE LATEST REVISIONS OF HELCO SPECIFICATIONS CS7001, CS7003, CS7202, CS9301, AND CS9401 AND APPLICABLE HELCO STANDARDS.

19. CONSTRUCTION

CONTRACTOR SHALL FURNISH ALL LABOR, MATERIALS, EQUIPMENT, AND SERVICES TO PROPERLY PERFORM AND FULLY COMPLETE ALL WORK SHOWN ON THE CONTRACT, DRAWINGS, AND SPECIFICATIONS. ALL MATERIALS SHALL BE NEW AND MANUFACTURED IN THE UNITED STATES OF AMERICA. ALL MANHOLE, HANDHOLE, AND DUCTLINE INSTALLATIONS SHALL BE INSPECTED AND APPROVED BY HELCO PRIOR TO EXCAVATION AND PRIOR TO PLACING CONCRETE. CONTRACTOR SHALL NOTIFY HELCO'S INSPECTION DIVISION AT 935-1171 AT LEAST 48 HOURS PRIOR TO PLACING CONCRETE.

CONTRACTOR TO COORDINATE WORK TO BREAK INTO HELCO'S EXISTING ELECTRICAL FACILITIES WITH HELCO'S UNDERGROUND DIVISION AT 935-1171 AT LEAST 10 WORKING DAYS IN ADVANCE.

20. STAKEOUT

THE CONTRACTOR SHALL ARRANGE FOR TONEOUTS OF ALL UNDERGROUND FACILITIES AND SHALL STAKEOUT ALL PROPOSED HELCO FACILITIES WITHIN THE PROJECT AREA SO AS TO NOT CONFLICT WITH ANY UTILITY (EXISTING OR PROPOSED) AND ANY PROPOSED CONSTRUCTION OR IMPROVEMENT WORK FOR VERIFICATION BY HELCO BEFORE PROCEEDING WITH HELCO WORK.

21. DUCTLINES

ALL DUCTLINE INSTALLATIONS SHALL BE PVC SCHEDULE 40 ENCASED IN CONCRETE, UNLESS OTHERWISE NOTED. ALL COMPLETED DUCTLINES SHALL BE MANDREL TESTED BY THE CONTRACTOR IN THE PRESENCE OF HELCO'S INSPECTOR USING HELCO'S STANDARD PRACTICE. THE CONTRACTOR SHALL INSTALL A 1/8" POLYOLEFIN PULL LINE IN ALL COMPLETED DUCTLINES AFTER MANDREL TESTING IS COMPLETE.

22. JOINT POLE REMOVAL

THE LAST JOINT POLE OCCUPANT OFF THE POLES SHALL REMOVE THE POLES.

23. AS-BUILT PLANS

THE CONTRACTOR SHALL PROVIDE HELCO WITH TWO SETS OF AS-BUILT REPRODUCIBLE TRACINGS SHOWING THE OFFSETS, STATIONING, AND VERTICAL ELEVATION OF THE DUCT LINE(S) CONSTRUCTED.

REVISION	DATE	DESCRIPTION	MADE BY	APPROVED

RONALD N. S. HO & ASSOCIATES, INC.
Electrical Engineers

STEVEN H. SAKAI
LICENSED PROFESSIONAL ENGINEER
No. 7637-E
HAWAII, U.S.A.

THIS WORK WAS PREPARED BY ME OR UNDER MY SOPERVISION

04/30/14
EXPIRATION DATE OF THE LICENSE

DEPARTMENT OF HAWAIIAN HOME LANDS
LA'I'OPUA VILLAGE 4
PHASE 1 – 'AKAU
TAX MAP KEY: (3) 7-4-21:10 & POR. 12
KAILUA-KONA, NORTH KONA, HAWAII

HELCO NOTES

Approved:

SHEET E-2 OF 40 SHEETS

FILE	POCKET	FOLDER	NO.

LAST SAVE: 02/05/13 @ 10:04:14 BY: GDT PLOT SC 1=1'
Z:\ACAD\PROJECTS\28124\w02_28124_HELCo Notes

SANDWICH ISLES COMMUNICATIONS, INC. CONSTRUCTION NOTES
June 13, 2012

GENERAL:

ALL WORK SHALL BE IN STRICT ACCORDANCE WITH SPECIFICATIONS AND REQUIREMENTS OF THE RURAL UTILITIES SERVICES (RUS) AND SANDWICH ISLES COMMUNICATIONS (SIC), WHICH COMPLIES WITH ALL APPLICABLE CITY, COUNTY, STATE AND FEDERAL REQUIREMENTS.

ALL MATERIALS USED MUST BE APPROVED AND (OR) ACCEPTED BY SANDWICH ISLES COMMUNICATIONS, INC.

CONTRACTOR MAY REFER TO THE RUS WEBSITE (HTTP://WWW.RURDEV.USDA.GOV/RUSTELECOMPROGRAMS.HTML) FOR REGULATIONS, BULLETINS, FORMS, ETC.

CONTACT THE HAWAII ONE CALL CENTER AT (866) 423-7287 FOR LOCATING EXISTING UNDERGROUND FACILITIES PRIOR TO BEGINNING ANY EXCAVATION.

ALL WORK SHALL BE COORDINATED AND SCHEDULED WITH SIC AND/OR ITS REPRESENTATIVE AND ANY OTHER AGENCY INVOLVED WITH THE PROJECT.

THE CONTRACTOR SHALL PROCURE AND PAY FOR ALL LICENSES AND PERMITS AND SHALL GIVE ALL NOTICES NECESSARY FOR PROSECUTION OF THE WORK.

CONDUITS:

1. ALL PVC CONDUITS, SWEEPS, COUPLINGS, ADAPTERS AND BELL ENDS SHALL BE SCHEDULE 40, UNLESS OTHERWISE SPECIFIED.

2. ALL HIGH DENSITY POLYETHYLENE CONDUITS SHALL BE SDR 11. TYPICAL 4-PACK UNIT INCLUDES FOUR 1-1/2" SDR 11 RATED CONDUITS IN THE COLORS OF BLACK, RED, ORANGE, AND WHITE, UNLESS OTHERWISE SPECIFIED. ALL CONDUITS TO BE PRESSURE TESTED AT 120 PSI. FUSION SPLICING OF THE CONDUIT SHALL BE ACCEPTABLE ONLY WHEN PULLING JOINTS THROUGH BORES. ALL COUPLINGS SHALL BE DOUBLE "E-LOC" MANUFACTURED BY ETOC SPECIALTY PRODUCTS, INC.

3. MAIN CONDUIT RUNS, EXCEPT RISER CONDUITS, SHALL BE CONSTRUCTED WITH MINIMUM 6-FOOT RADIUS CURVES, UNLESS OTHERWISE APPROVED BY THE ENGINEER.

4. AFTER THE CONDUITS ARE INSTALLED, A ROUND SOLID MANDREL NOT LESS THAN 12" IN LENGTH AND HAVING A DIAMETER OF 1/4" LESS THAN THE INSIDE DIAMETER OF THE CONDUIT SHALL BE PULLED THROUGH EACH CONDUIT. SUFFIXES LISTED IN RUS 515B FOR CONDUITS ARE APPLICABLE.

5. INSTALL MULETAPE IN ALL PVC CONDUITS AND CAP ALL CONDUITS AFTER TESTING. THE NEPTCO (OR APPROVED EQUAL) MULETAPE IS AVAILABLE IN 3,000FT., 6,500FT., AND 10,000FT. REELS FROM WESTINGHOUSE ELECTRIC SUPPLY COMPANY (WESCO), THE NEPTCO MULETAPE IS PRE-LUBRICATED AND PRINTED WITH SEQUENTIAL FOOTAGE MARKINGS. MULETAPE WILL NOT BE INSTALLED IN CONDUITS WITH A DIAMETER OF 1-1/2" OR LESS.

6. ALL 4" DUCTS SHALL HAVE WATERTIGHT PLUGS TO KEEP THEM FREE OF MOISTURE & DEBRIS AND TO ACCOMMODATE CABLING PLACED ON FUTURE PROJECTS.
   4" PLUGS SHALL CONSIST OF:
   TYCO, QUADPLEX JACKMOON PLUGS, SERIES 136
   TYCO, JACKMOON HOLE PLUGS & BUSHINGS, SERIES 136
   ALL OTHER DUCTS SHALL HAVE TYCO, BLANK JACKMOON PLUGS TO KEEP THEM FREE OF WATER AND DEBRIS.

7. CONDUIT STUBS FROM HANDHOLES TO INDIVIDUAL RESIDENTIAL LOTS SHALL BE SCHEDULE 40 PVC, 1" DIAMETER AND EXTENDED 5' BEYOND PROPERTY LINE. CAP AND SEAL END AND MARK LOCATIONS WITH ABOVE GROUND MARKER.

8. ALL CONDUITS SHALL ENTER MANHOLES AT A 90 DEGREE ANGLE AND SHALL EXTEND INTO THE MANHOLE AS FOLLOWS: CONDUITS DESIGNATED FOR FIBER SHALL EXTEND 12" INTO THE MANHOLE. ALL OTHER CONDUITS SHALL BE FLUSH WITH THE INSIDE WALL AND INCLUDE BELL ENDS. ANY EXCEPTIONS SHALL ONLY BE PERMITTED WHEN SPECIFIED BY THE ENGINEER.

9. ALL CONDUITS ENTERING MANHOLES OR HANDHOLES SHALL BE GROUTED BETWEEN THE CONDUITS AND SIDEWALL, INSIDE AND OUT. ALL CONDUITS WILL ENTER THE MANHOLES AND HANDHOLES ON THE PROPERTY SIDE AT ALL TIMES UNLESS OTHERWISE SPECIFIED BY THE ENGINEER.

10. BACKFILL AND COMPACTION FOR DUCTLINE TRENCHES, MANHOLES AND HANDHOLES , SHALL BE IN ACCORDANCE WITH:

    A. STATE HIGHWAY DEPARTMENT'S STANDARD SPECIFICATIONS FOR ROAD AND BRIDGE CONSTRUCTION WITH LATEST AMENDMENTS, IF CONSTRUCTION IS LOCATED UNDER A STATE STREET OR ROAD, OR LOCATED IN PRIVATE PROPERTY.

    B. THE STANDARD SPECIFICATIONS FOR ROAD, BRIDGE AND PUBLIC WORKS CONSTRUCTION, DATED 1986, OF THE DEPARTMENT OF PUBLIC WORKS, CITY AND COUNTY OF HONOLULU, WITH LATEST AMENDMENTS; COUNTY OF KAUAI, MAUI, OR HAWAII, AS THE CASE MAY BE, IF CONSTRUCTION IS LOCATED UNDER COUNTY STREETS AND ROADS.

11. BACKFILLING SHALL BE SUBJECT TO THE APPROVAL OF THE SIC INSPECTOR, THE AUTHORIZED REPRESENTATIVE OF THE DEPARTMENT OF TRANSPORTATION, STATE OF HAWAII AND/OR DEPARTMENT OF PUBLIC WORKS, CITY AND COUNTY OF HONOLULU, COUNTY OF KAUAI, MAUI OR HAWAII, AS THE CASE MAY BE.

12. A THIRD PARTY GEOTECHNICAL ENGINEER, LICENSED AND INSURED IN THE STATE OF HAWAII, MUST CERTIFY THAT THE EXCAVATED AREA MEETS THE GOVERNING AGENCIES AND/OR OWNERS STANDARDS FOR BACKFILL AND COMPACTION.

13. EXCAVATED MATERIAL MAY BE REUSED AS BACKFILL, PROVIDING THAT IT CONFORMS TO REQUIREMENTS OF TYPE "A" AND TYPE "B" BACKFILL, AS REQUIRED WITHIN THE STANDARD SPECIFICATIONS. A WRITTEN SOILS REPORT OF CONFORMANCE BY A LICENSED THIRD PARTY GEOTECHNICAL ENGINEER IS NEEDED PRIOR TO BACKFILL USING THE EXCAVATED MATERIAL.

    A. TYPE A BACKFILL IS DEFINED AS BEACH SAND, EARTH OR EARTH AND GRAVEL. MAXIMUM PARTICLE SIZE SHALL BE 1" AND MIXTURE SHALL NOT CONTAIN MORE THAN 20% BY VOLUME OF ROCK PARTICLES.

    B. TYPE B BACKFILL IS DEFINED AS BEACH SAND, EARTH OR EARTH AND GRAVEL. MAXIMUM PARTICLE SIZE SHALL BE 1/2" AND MIXTURE SHALL NOT CONTAIN MORE THAN 20% BY VOLUME OF ROCK PARTICLES.

14. ALL CONDUIT RUNS SHALL HAVE A 3" NON-METALLIC WARNING TAPE PLACED 12 INCHES ABOVE THE CONDUIT RUN. THE TAPE SHALL READ "CAUTION BURIED FIBER OPTIC CABLE BELOW".

MANHOLES AND HANDHOLES:

1. ALL MANHOLES SHALL HAVE HS20-44 TRAFFIC LOADING COVERS (UNLESS OTHERWISE NOTED). HANDHOLES SHALL HAVE 20K TRAFFIC LOAD RATED COVERS.

2. ALL MANHOLE AND HANDHOLE COVERS SHALL HAVE COVER LOGO TO READ "SIC".

3. ALL MANHOLE AND HANDHOLE COVER BOLTS SHALL BE STAINLESS STEEL 3/4" PENTAHEAD, UNLESS OTHERWISE NOTED.

4. ALL MANHOLES AND HANDHOLES ARE SPECIFIED AS FOLLOWS:

    A. UM35 AND UM4X6 MANHOLE ASSEMBLY UNITS - HAWAII PRECAST, INC. AS PER MASTER PURCHASE AGREEMENT.

    B. UHC30X48X33 HANDHOLE (PULLBOX) ASSEMBLY UNIT. THIS UNIT SHALL CONSIST OF ONE TWO TIER ARMORCAST POLYMER CONCRETE BOX & COVER ASSEMBLY. PART NUMBER (A6001430TA-SIC4) OR EQUIVALENT.

    C. UHC13X24X36 HANDHOLE (PULLBOX) ASSEMBLY UNIT. THIS UNIT SHALL CONSIST OF ONE ARMORCAST POLYMER CONCRETE BOX & COVER ASSEMBLY. PART NUMBER (A6001946TA-SIC2) OR EQUIVALENT.

    D. UH35 AND UH4X6 HANDHOLE ASSEMBLY UNITS - HAWAII PRECAST, INC. AS PER MASTER PURCHASE AGREEMENT.

5. ALL MANHOLES AND HANDHOLES TO BE ORDERED WITH ALL HARDWARE, INCLUDING CABLE RACKS, STEPS AND LOCKS.

6. SET MANHOLE OR HANDHOLE ON A LEVEL AREA, IN THE BOTTOM OF THE EXCAVATION, ON A 4" LAYER OF CRUSHED ROCK, FOR DRAINAGE PURPOSES.

7. THE BASE OF ALL MANHOLES AND HANDHOLES WILL BE PLACED LEVEL. SOME MANHOLES HAVE ADJUSTABLE FRAMES. ALL VOIDS CREATED DURING INSTALLATION MUST BE FILLED WITH MORTAR MIX OR CONCRETE. THIS IS ESPECIALLY TRUE FOR MANHOLES AND HANDHOLES SET IN ROADWAYS.

8. BEFORE BACKFILLING AND COMPACTING, MAKE SURE COVERS ARE IN PLACE AND SECURE. LAYER 6" TO 8" OF BACKFILL MATERIAL AROUND THE MANHOLE OR HANDHOLE. TAMP EACH INDIVIDUAL LAYER OF BACKFILL MATERIAL. CONTINUE THE LAYERING AND "TAMPING" UNTIL FINAL GRADE IS ACHIEVED.

9. THE TOPS OF ALL MANHOLES AND HANDHOLES SHALL BE FLUSH TO GRADE IN PAVED AREAS OR 1" ABOVE FINISH GRADE IN NON-PAVED AREAS, UNLESS OTHERWISE SPECIFIED BY ENGINEER.

10. PROVIDE A 5/8-INCH DIAMETER X 8 FT. COPPER CLAD GROUND ROD AT HANDHOLES AND MANHOLES AS SPECIFIED ON THE DRAWINGS OR AS DIRECTED BY THE PROJECT MANAGER.

UTILITY POLE INSTALLATION:

1. ALL AERIAL WORK SHALL BE IN STRICT ACCORDANCE WITH SPECIFICATIONS AND REQUIREMENTS OF THE RURAL UTILITIES SERVICES (RUS) BULLETIN 1753F-152.

2. UTILITY POLES SHALL BE PRESERVED UTILIZING THE PENTACHLOROPHENOL (PENTA) TYPE TREATMENT.

3. UTILITY POLES SHALL BE TERMITE PROTECTED UTILIZING TERMIMESH POLESOCK'S OR EQUIVALENT. POLESOCK'S SHALL EXTEND NO MORE THAN EIGHT INCHES ABOVE GROUND AND BE SECURED WITH DELTEC STRAPPING. FOLLOW THE MANUFACTURER'S RECOMMENDATIONS FOR INSTALLATION.

4. THE POLE HOLE SHALL BE OF SUFFICIENT DIAMETER TO PERMIT THE POLE TO SETTLE FREELY TO THE BOTTOM OF THE HOLE WITHOUT TRIMMING THE BUTT AND STILL HAVE SUFFICIENT SPACE BETWEEN THE POLE AND THE SIDE OF THE HOLE TO PERMIT PROPER TAMPING OF THE BACKFILL AT EVERY POINT AROUND THE POLE, AND THROUGHOUT THE MANUFACTURER'S RECOMMENDATIONS FOR INSTALLATION.

5. THE POLE HOLE SHALL NOT EXCEED TWO TIMES THE DIAMETER OF THE POLES BUTT DIAMETER.

6. BACKFILL SHALL BE THOROUGHLY TAMPED THE FULL DEPTH OF THE POLE HOLE. EARTH MUST BE BANKED AROUND THE POLE TO A MINIMUM HEIGHT OF SIX INCHES ABOVE GROUND LEVEL.

7. POLES SHALL BE SET PLUMB EXCEPT AT CORNERS WHERE THEY SHALL BE SET AND RAKED AGAINST THE LOAD SO THAT THE POLE TOP WILL BE IN LINE AFTER THE LOAD IS APPLIED. THE RAKE POLE SHALL NOT EXCEED SIX INCHES FOR EACH TEN FEET OF POLE LENGTH AFTER THE CONDUCTORS ARE INSTALLED AT THE REQUIRED TENSION. DEADEND SHALL BE SET SO AS TO BE PLUMB AND IN LINE AFTER THE LOAD IS APPLIED.

8. POLE LIGHTNING PROTECTION SHALL BE A #6 AWG BARE COPPER WIRE IN ACCORDANCE WITH RUS CONSTRUCTION PRACTICES.

9. SUSPENSION STRAND/HARDWARE SHALL BE CLASS C GALVANIZED STEEL UTILITY GRADE FOR CORROSION AREAS.

10. GUY GUARDS, YELLOW IN COLOR SHALL BE PLACED ON ALL DOWN GUYS.

APPROVED BY:

SANDWICH ISLES COMMUNICATIONS, INC DATE

REVISION	DATE	DESCRIPTION	MADE BY	APPROVED

RONALD N. S. HO & ASSOCIATES, INC.
Electrical Engineers

STEVEN H. SAKAI
LICENSED PROFESSIONAL ENGINEER
No. 7637-E
HAWAII, U.S.A.

THIS WORK WAS PREPARED BY ME OR UNDER MY SUPERVISION

04/30/14
EXPIRATION DATE OF THE LICENSE

DEPARTMENT OF HAWAIIAN HOME LANDS
LA'I'ŌPUA VILLAGE 4
PHASE 1 - 'ĀKAU
TAX MAP KEY: (3) 7-4-21:10 & POR. 12
KAILUA-KONA, NORTH KONA, HAWAII

SIC NOTES

Approved:

COUNTY ENGINEER, DPW, COUNTY OF HAWAII DATE

SHEET E-3 OF 46 SHEETS

FILE	POCKET	FOLDER	NO.

LAST SAVE: 02/05/13 @ 10:24:17 BY: GDT PLOT SC: 1"=1'
Z:\VCAD\PROJECTS\2812A\ed3_2812A_SIC Notes

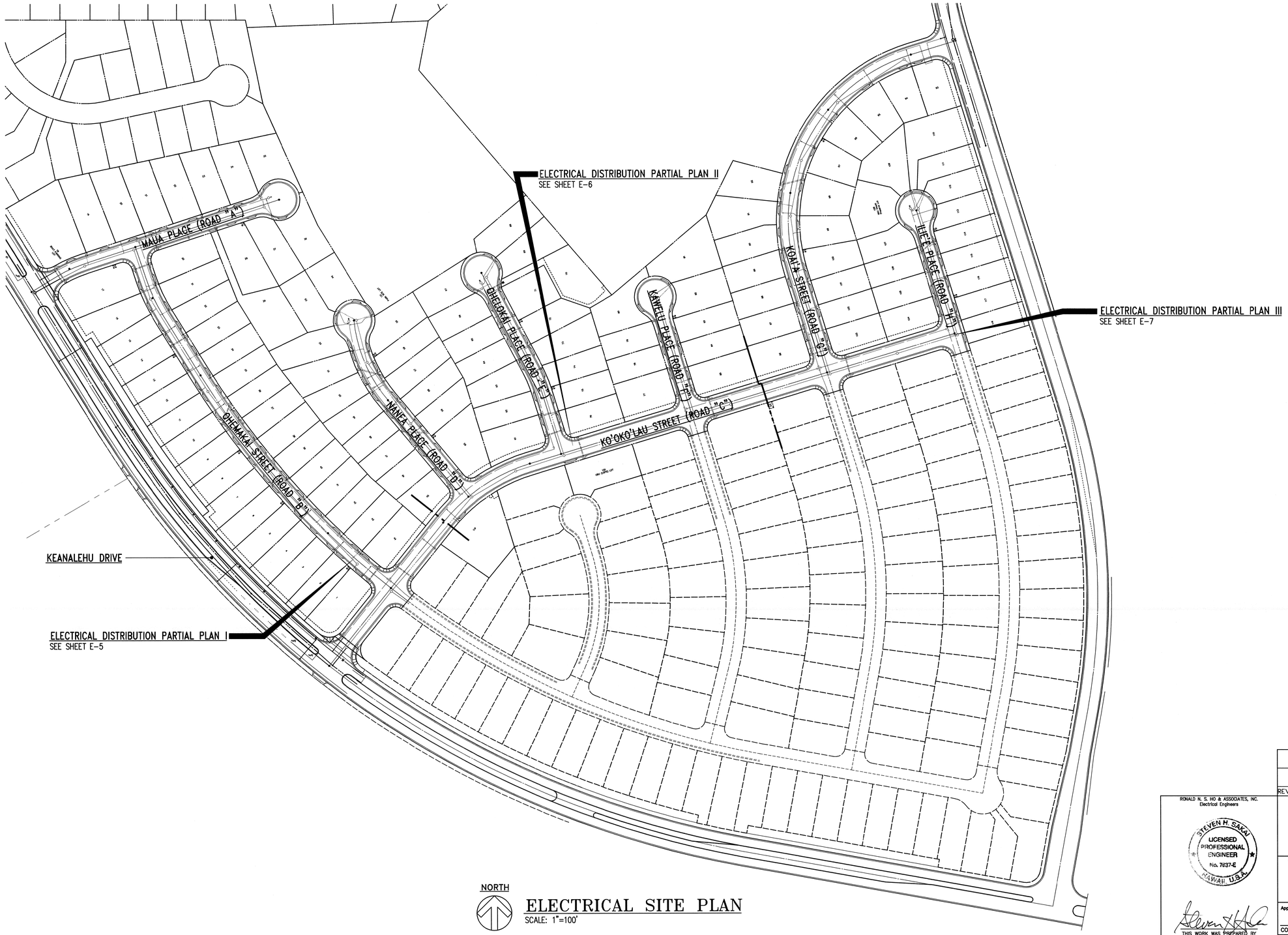

ELECTRICAL SITE PLAN

SCALE: 1"=100'

APPROVED BY:

SANDWICH ISLES COMMUNICATIONS, INC DATE

REVISION	DATE	DESCRIPTION	MADE BY	APPROVED

RONALD N. S. HO & ASSOCIATES, INC.
Electrical Engineers

STEVEN H. SAKAI
LICENSED PROFESSIONAL ENGINEER
No. 7637-E
HAWAII, U.S.A.

THIS WORK WAS PREPARED BY ME OR UNDER MY SUPERVISION

04/30/14
EXPIRATION DATE OF THE LICENSE

DEPARTMENT OF HAWAIIAN HOME LANDS
LA'I'ŌPUA VILLAGE 4
PHASE 1 – 'ĀKAU
TAX MAP KEY: (3) 7-4-21:10 & POR. 12
KAILUA-KONA, NORTH KONA, HAWAII

SITE PLAN

Approved:

COUNTY ENGINEER, DPW, COUNTY OF HAWAII DATE

SHEET E-4 OF 46 SHEETS

FILE	POCKET	FOLDER	NO.

LAST SAVE: 02/05/13 @ 10:04:28 BY: GDT PLOT SC 1=100.0000
Z:\KAOA\PROJECTS\29124\W04_29124_SitePlan01 XREFS: 59-026 UPDATED UTILITIES 20130125 _XRH-29124-BACKGROUND _XRH-29124-ELEC-ALL

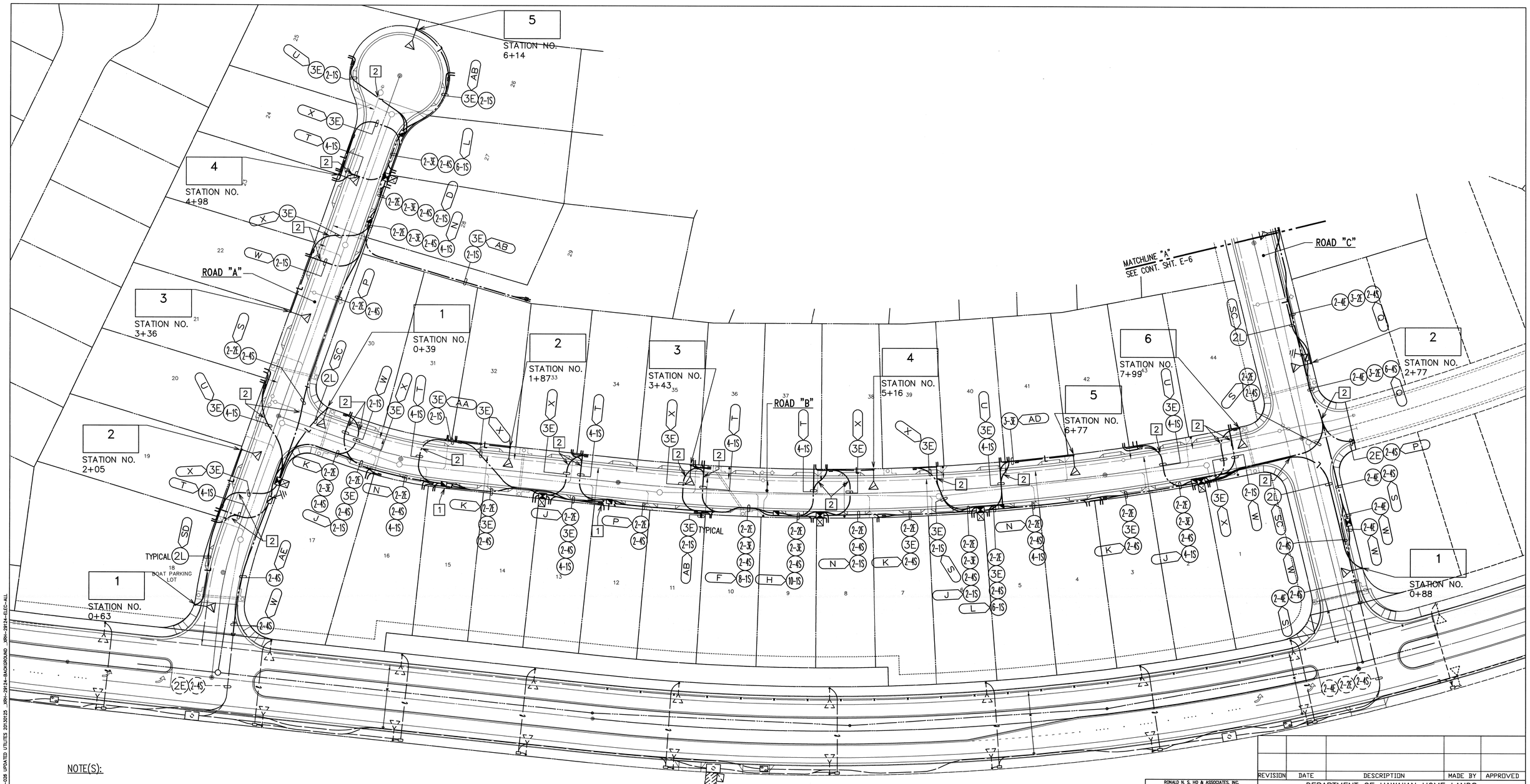

NOTE(S):

1. 2" HELCO CONDUIT TO BYPASS HELCO HANDHOLE.
2. REFER TO DUCT SECTION ON SHEET E-9 FOR DUCTLINES CROSSING WATER LINES.

NORTH

ELECTRICAL DISTRIBUTION PARTIAL PLAN I

SCALE: 1"=40'

APPROVED BY:

SANDWICH ISLES COMMUNICATIONS, INC DATE

40' 20' 0 40' 80' 120'

SCALE: 1"=40'

GRAPHIC SCALE

RONALD N. S. HO & ASSOCIATES, INC.
Electrical Engineers

STEVEN H. SAKAI
LICENSED PROFESSIONAL ENGINEER
No. 7037-E
HAWAII, U.S.A.

THIS WORK WAS PREPARED BY ME OR UNDER MY SUPERVISION

04/30/14
EXPIRATION DATE OF THE LICENSE

REVISION	DATE	DESCRIPTION	MADE BY	APPROVED

DEPARTMENT OF HAWAIIAN HOME LANDS
LA'I'OPUA VILLAGE 4
PHASE 1 – 'ĀKAU
TAX MAP KEY: (3) 7-4-21:10 & POR. 12
KAILUA-KONA, NORTH KONA, HAWAII

ELECTRICAL DISTRIBUTION PARTIAL PLAN I

Approved:

COUNTY ENGINEER, DPW, COUNTY OF HAWAII DATE

SHEET E-5 OF 46 SHEETS

FILE	POCKET	FOLDER	NO.

LAST SAVE: 04/30/14 @ 15:43:33 BY: GET PLOT SC: 1=40.000000
Z:\Jobs\PROJECTS\29124\Work_29124_JobPlan01 04OCT13 XREFS: 36-026 UPDATED UTILITIES 20130125 XRH-29124-BACKGROUND XRH-29124-ELEC-ALL

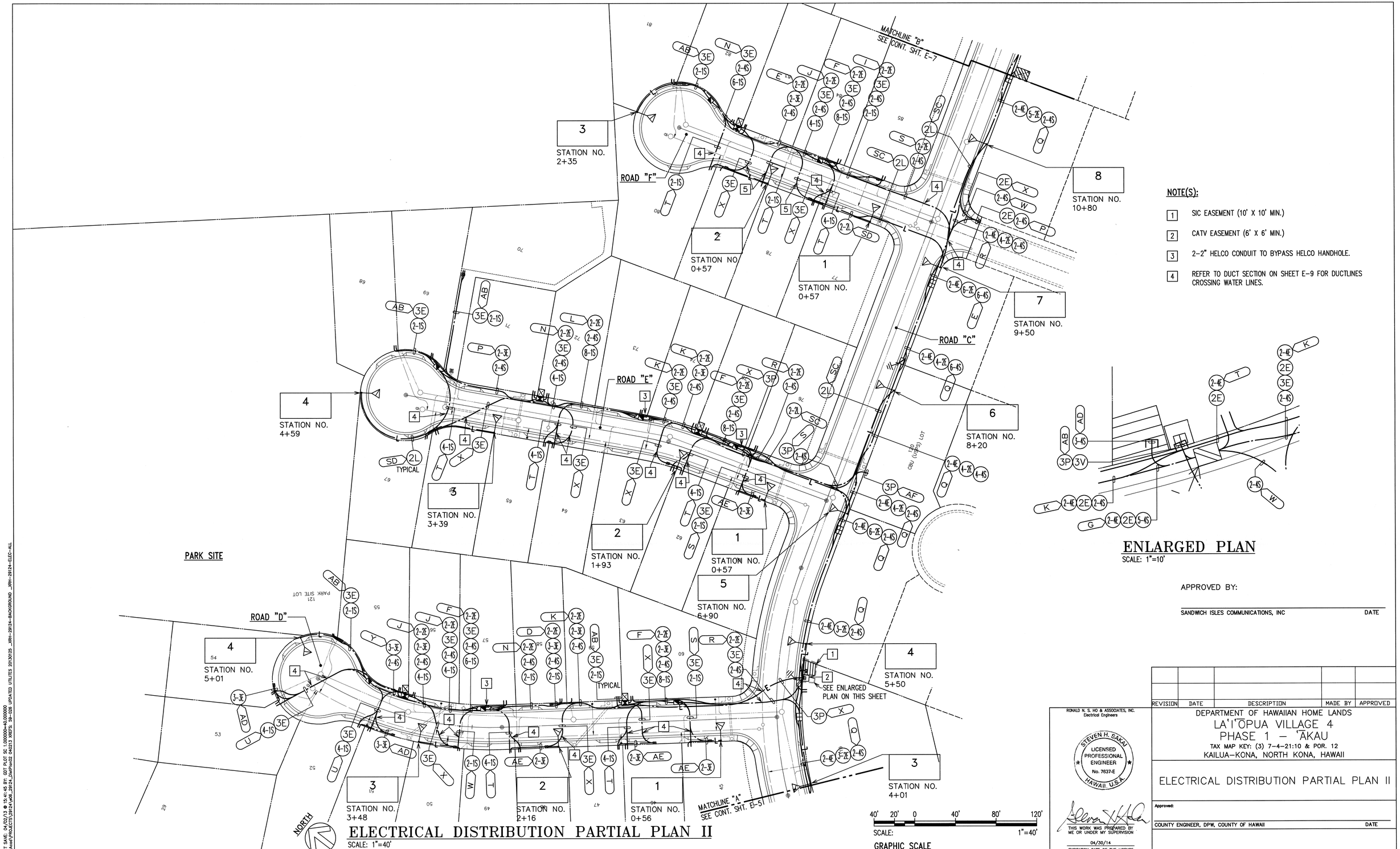

ELECTRICAL DISTRIBUTION PARTIAL PLAN II
SCALE: 1"=40'

NOTE(S):

1. SIC EASEMENT (10' X 10' MIN.)
2. CATV EASEMENT (6' X 6' MIN.)
3. 2-2" HELCO CONDUIT TO BYPASS HELCO HANDHOLE.
4. REFER TO DUCT SECTION ON SHEET E-9 FOR DUCTLINES CROSSING WATER LINES.

ENLARGED PLAN
SCALE: 1"=10'

APPROVED BY:

SANDWICH ISLES COMMUNICATIONS, INC DATE

REVISION	DATE	DESCRIPTION	MADE BY	APPROVED

RONALD N. S. HO & ASSOCIATES, INC.
Electrical Engineers

STEVEN H. SAKAI
LICENSED PROFESSIONAL ENGINEER
No. 7637-E
HAWAII, U.S.A.

THIS WORK WAS PREPARED BY ME OR UNDER MY SUPERVISION

04/30/14
EXPIRATION DATE OF THE LICENSE

DEPARTMENT OF HAWAIIAN HOME LANDS
LA'I'ŌPUA VILLAGE 4
PHASE 1 – 'ĀKAU
TAX MAP KEY: (3) 7-4-21:10 & POR. 12
KAILUA-KONA, NORTH KONA, HAWAII

ELECTRICAL DISTRIBUTION PARTIAL PLAN II

Approved:

COUNTY ENGINEER, DPW, COUNTY OF HAWAII DATE

SHEET E-6 OF 40 SHEETS

FILE	POCKET	FOLDER	NO.

LAST SAVE: 04/02/13 @ 15:41:45 BY: IDT PLOT SC 1.000000=40.000000
Z:\Wood\PROJECTS\29124\e6_29124_DMPlan02 040213 XREFS: 59-108 (UPDATED UTILITIES 20130725 _XRH-29124-BACKGROUND _XRH-29124-ELEC-ALL

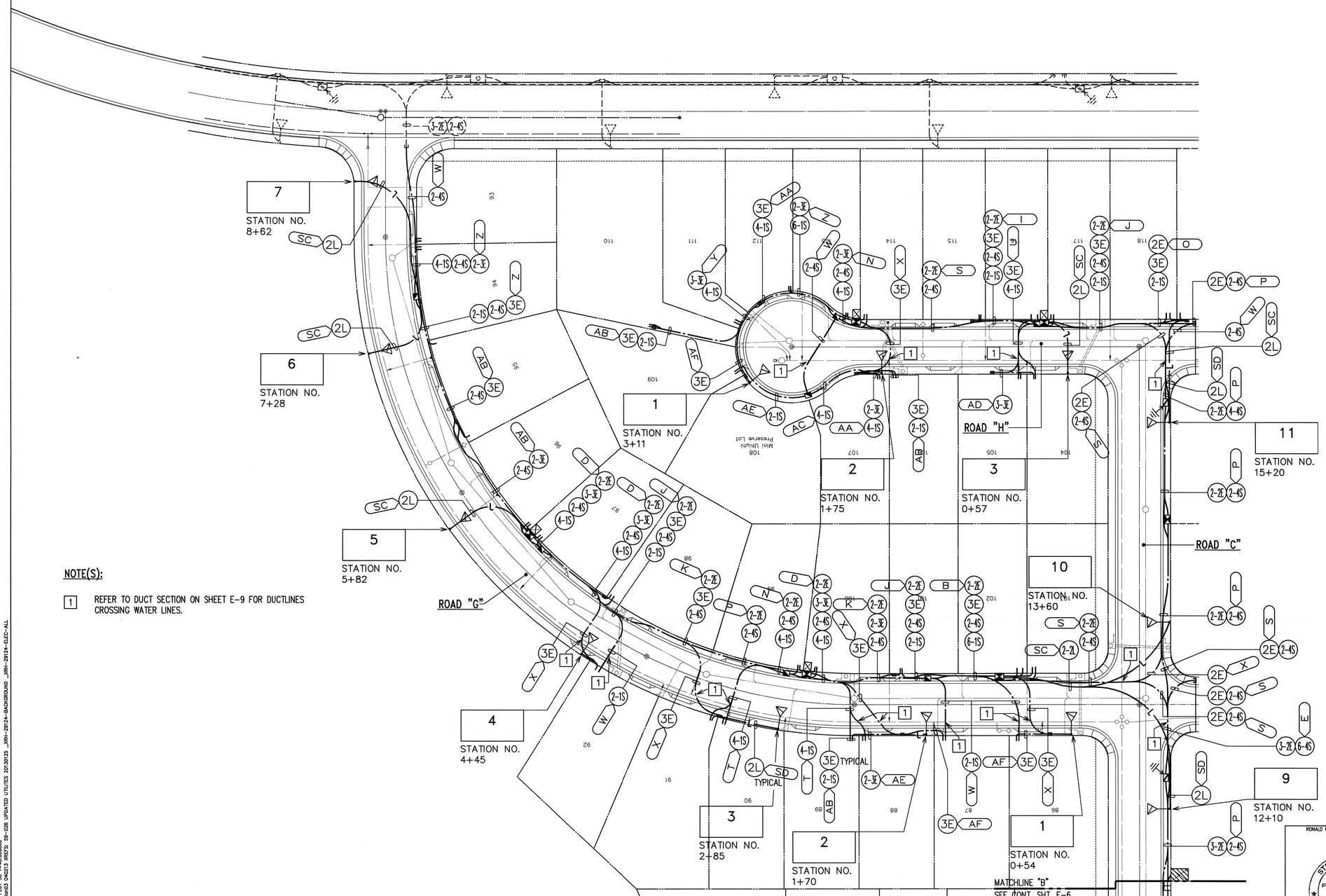

NOTE(S):

1 REFER TO DUCT SECTION ON SHEET E-9 FOR DUCTLINES CROSSING WATER LINES.

NORTH

ELECTRICAL DISTRIBUTION PARTIAL PLAN III

SCALE: 1"=40'

40' 20' 0 40' 80' 120'

SCALE: 1"=40'

GRAPHIC SCALE

APPROVED BY:

SANDWICH ISLES COMMUNICATIONS, INC DATE

REVISION	DATE	DESCRIPTION	MADE BY	APPROVED

RONALD N. S. HO & ASSOCIATES, INC.
Electrical Engineers

STEVEN H. SAKAI
LICENSED PROFESSIONAL ENGINEER
No. 7637-E
HAWAII, U.S.A.

THIS WORK WAS PREPARED BY ME OR UNDER MY SUPERVISION

04/30/14
EXPIRATION DATE OF THE LICENSE

DEPARTMENT OF HAWAIIAN HOME LANDS
LA'I'OPUA VILLAGE 4
PHASE 1 – 'ĀKAU
TAX MAP KEY: (3) 7-4-21:10 & POR. 12
KAILUA-KONA, NORTH KONA, HAWAII

ELECTRICAL DISTRIBUTION PARTIAL PLAN III

Approved:

COUNTY ENGINEER, DPW, COUNTY OF HAWAII DATE

SHEET E-7 OF 40 SHEETS

FILE	POCKET	FOLDER	NO.

LAST SAVE: 04/02/13 @ 15:43:10 BY: IDT PLOT SC 1=40.000000
Z:\Acad\PROJECTS\2914\WO_2914_Sandwich 040213 XREF: 9a-005 UPDATED UTILITIES 20130125 _XRH-2914-BACKGROUND _XRH-2914-ELEC-ALL

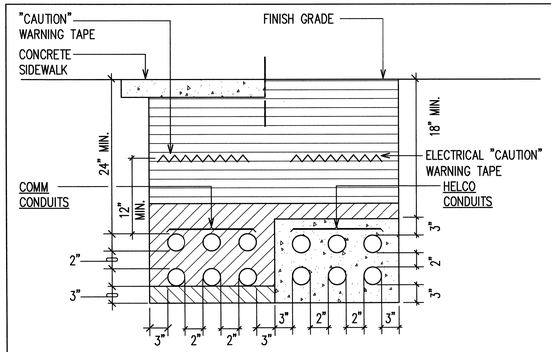

SECTION (A)

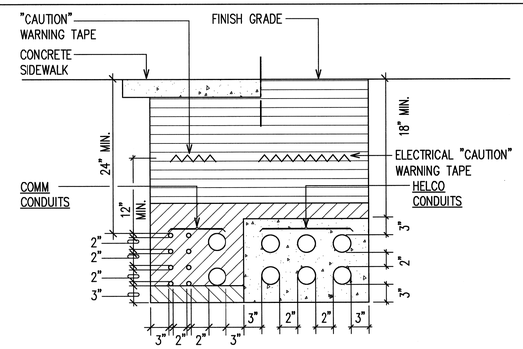

SECTION (B)

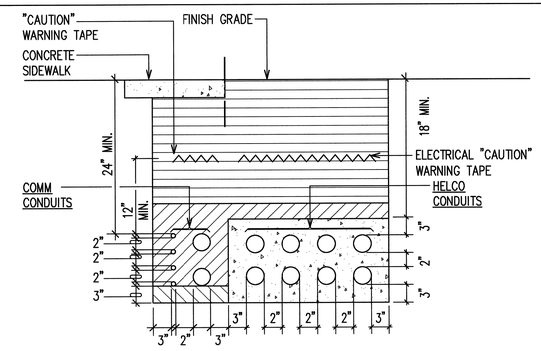

SECTION (C)

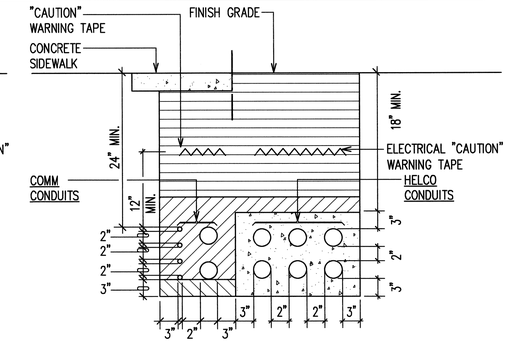

SECTION (D)

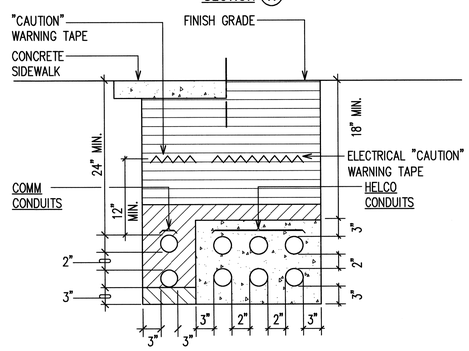

SECTION (E)

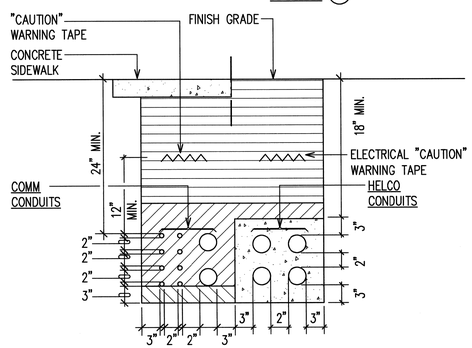

SECTION (F)

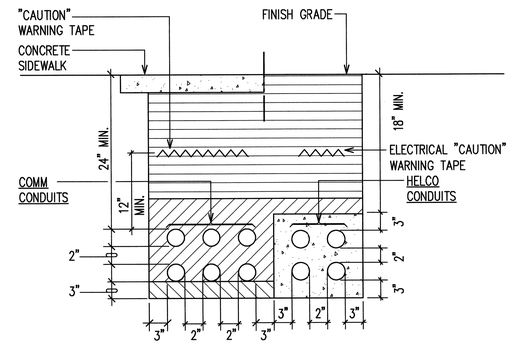

SECTION (G)

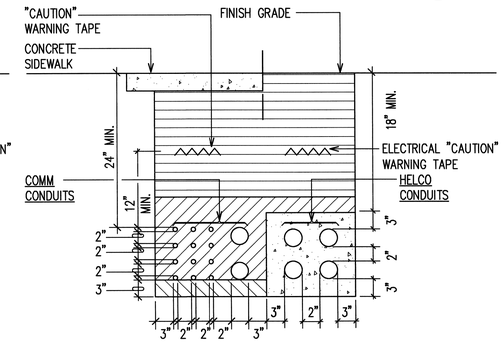

SECTION (H)

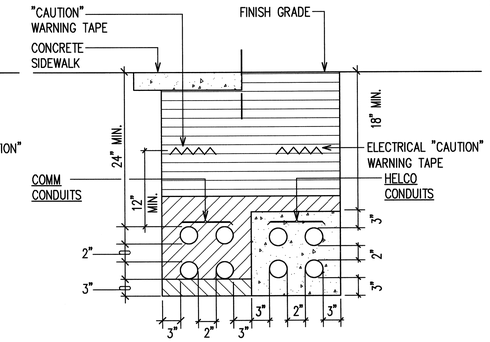

SECTION (I)

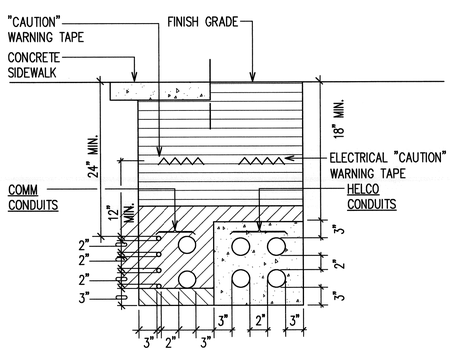

SECTION (J)

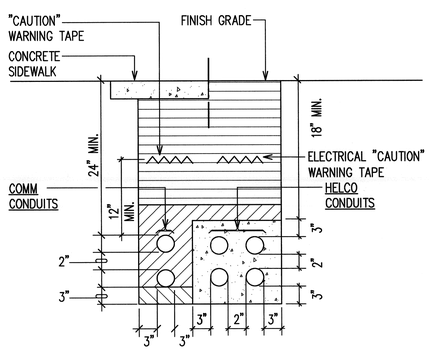

SECTION (K)

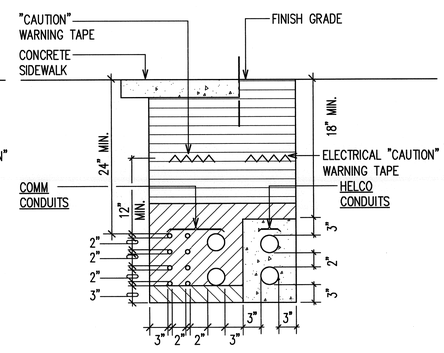

SECTION (L)

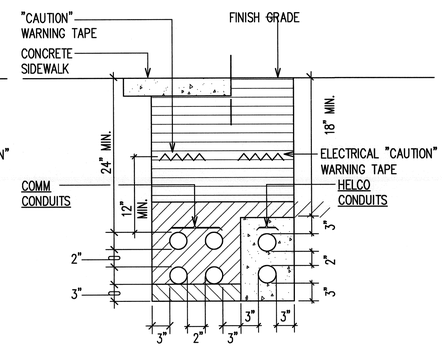

SECTION (M)

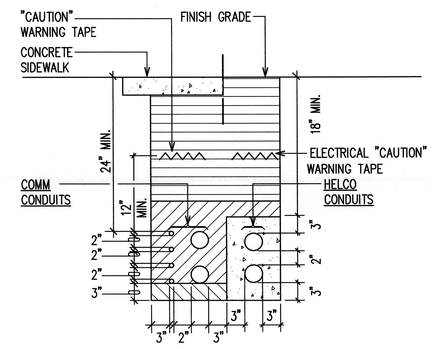

SECTION (N)

NOTES:

1. ELECTRICAL WARNING TAPE–HEAVY GAUGE 4 MIL, RED WITH BLACK LETTERING, 3" WIDE, "BURIED ELECTRIC LINE BELOW–CAUTION" @ DIRECT BURIED CONDUITS.
2. "CAUTION" WARNING TAPE REQUIRED OVER ENTIRE LENGTH OF ALL CONDUITS.
3. 3" SEPARATION REQUIRED BETWEEN ELECTRICAL AND TELEPHONE CONDUITS WITHIN CONCRETE ENCASEMENT.
4. CONTRACTOR TO MAINTAIN MIN. 8" SEPERATION FROM DUCTLINE TO PROPERTY LINE/EASEMENT.
5. SEE DISTRIBUTION PLANS FOR DUCT QUANTITY.
6. CONTRACTOR TO CONSTRUCT HELCO FACILITIES PER HELCO DRAWING _____. SEE GENERAL NOTE ON SHEET E–1.

BACKFILL NOTES:

TYPE "A" BACKFILL – EARTH & GRAVEL. ROCK SIZE TO BE 1" MAX & THE MIXTURE TO CONTAIN NOT MORE THAN 50% BY VOLUME OF ROCK PARTICLES. THE MATERIAL SHALL BE NONEXPANSIVE. 95% COMPACTION.

TYPE "B" BACKFILL – EARTH & GRAVEL. MIXTURE MUST PASS A 1/2" MESH SCREEN & CONTAIN NOT MORE THAN 20% BY VOLUME OF ROCK PARTICLES. 95% COMPACTION.

NOTE – IF NORMAL MATERIAL AT BOTTOM OF TRENCH IS NOT TYPE "B", AN ADDITIONAL 3" SHALL BE EXCAVATED & TYPE "B" BACKFILL PROVIDED.

CONCRETE – 3" ENCASEMENT, 2500 PSI COMPRESSIVE STRENGTH @ 28 DAYS.

TYPICAL DUCT SECTIONS I

NOT TO SCALE

APPROVED BY:

SANDWICH ISLES COMMUNICATIONS, INC DATE

REVISION	DATE	DESCRIPTION	MADE BY	APPROVED

RONALD N. S. HO & ASSOCIATES, INC.
Electrical Engineers

STEVEN H. SAKAI
LICENSED PROFESSIONAL ENGINEER
No. 7837-E
HAWAII, U.S.A.

THIS WORK WAS PREPARED BY ME OR UNDER MY SUPERVISION

04/30/14
EXPIRATION DATE OF THE LICENSE

DEPARTMENT OF HAWAIIAN HOME LANDS
LA'I'ŌPUA VILLAGE 4
PHASE 1 – 'ĀKAU
TAX MAP KEY: (3) 7–4–21:10 & POR. 12
KAILUA–KONA, NORTH KONA, HAWAII

TYPICAL DUCT SECTIONS I

Approved:

COUNTY ENGINEER, DPW, COUNTY OF HAWAII DATE

SHEET E-8 OF 46 SHEETS

FILE	POCKET	FOLDER	NO.

LAST SAVE: 02/05/13 @ 10:04:51 BY: GDT PLOT SC 12.000000=12.000000
Z:\KAU\PROJECTS\29124\w08_29124_Duct1

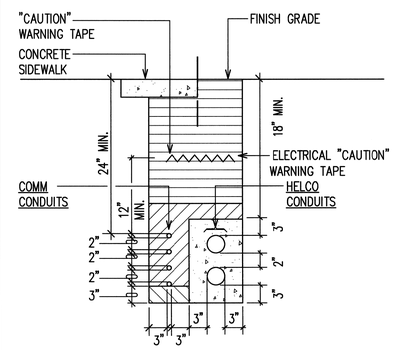

SECTION (O)

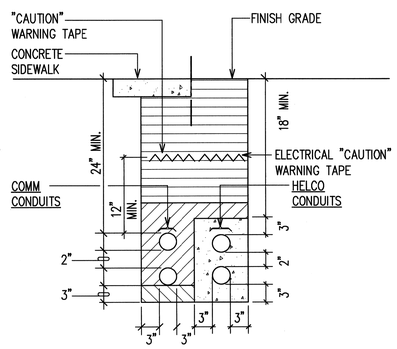

SECTION (P)

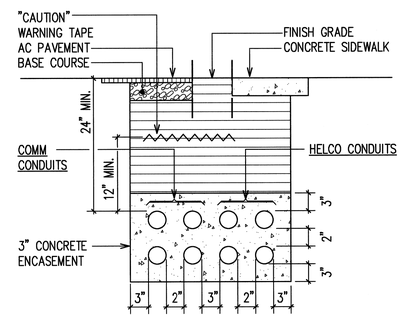

SECTION (Q)

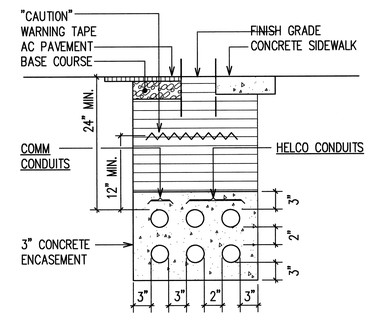

SECTION (R)

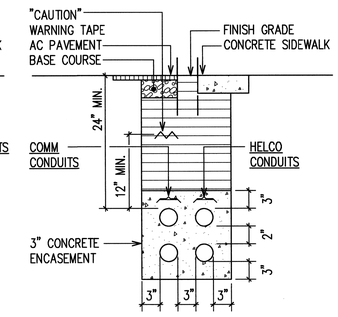

SECTION (S)

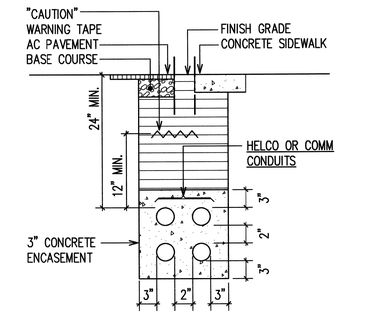

SECTION (T)

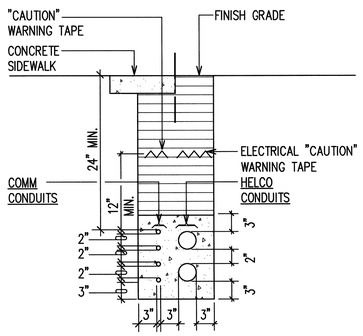

SECTION (U)

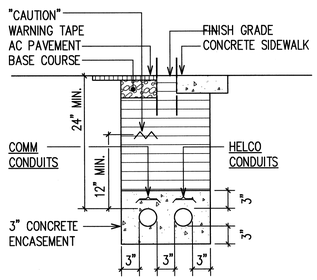

SECTION (V)

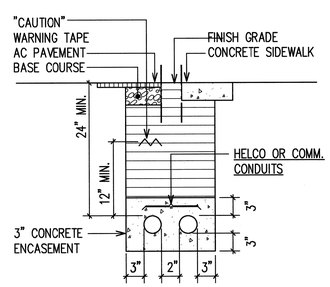

SECTION (W)

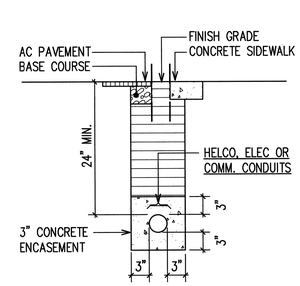

SECTION (X)

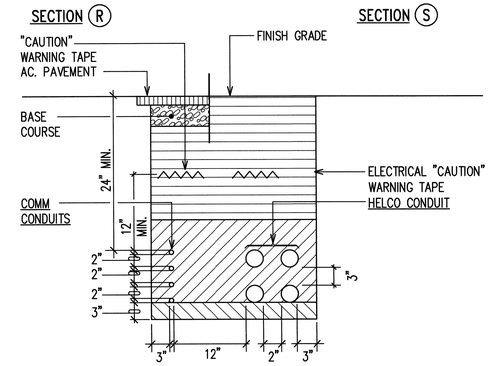

SECTION (Y)

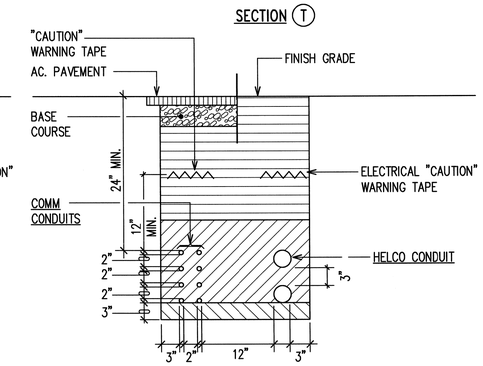

SECTION (Z)

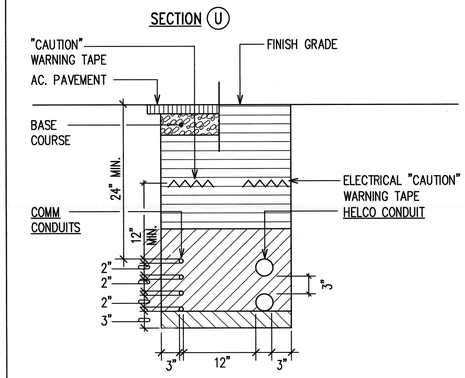

SECTION (AA)

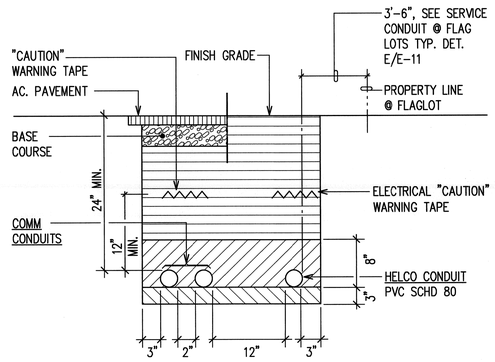

SECTION (AB)

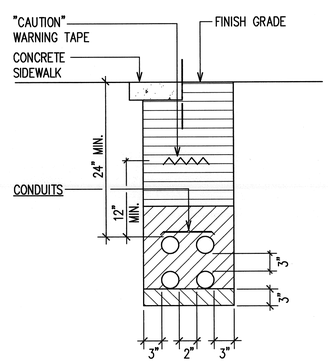

SECTION (AC)

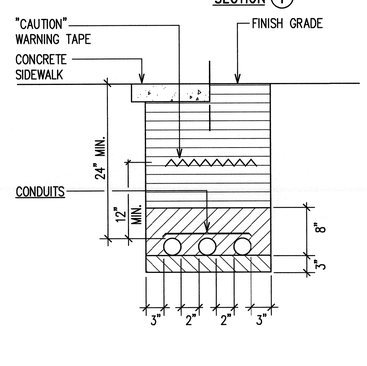

SECTION (AD)

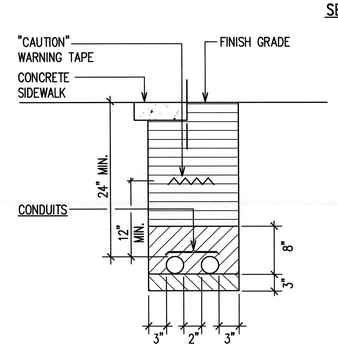

SECTION (AE)

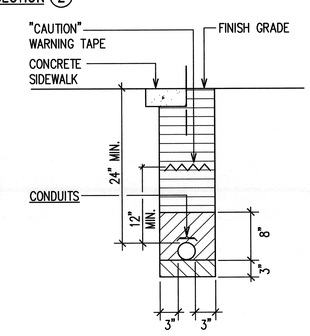

SECTION (AF)

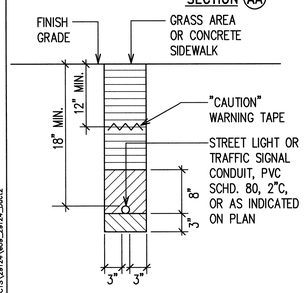

SECTION (SD)

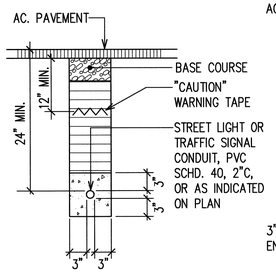

SECTION (SC)

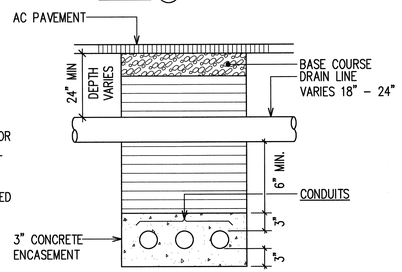

AFTER DRAIN LINE CROSSING SLOPE DUCT BANK UPWARDS TO 24" MIN. COVER.

DRAIN CROSSING VERTICAL CLEARANCE

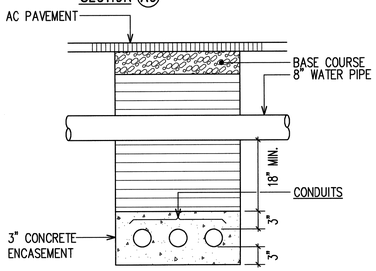

WATER CROSSING VERTICAL CLEARANCE

APPROVED BY:

SANDWICH ISLES COMMUNICATIONS, INC DATE

TYPICAL DUCT SECTIONS II

NOT TO SCALE

RONALD N. S. HO & ASSOCIATES, INC.
Electrical Engineers

STEVEN H. SAKAI
LICENSED PROFESSIONAL ENGINEER
No. 7637-E
HAWAII, U.S.A.

THIS WORK WAS PREPARED BY ME OR UNDER MY SUPERVISION

04/30/14
EXPIRATION DATE OF THE LICENSE

REVISION	DATE	DESCRIPTION	MADE BY	APPROVED

DEPARTMENT OF HAWAIIAN HOME LANDS
LA'I'ŌPUA VILLAGE 4
PHASE 1 – 'AKAU
TAX MAP KEY: (3) 7-4-21:10 & POR. 12
KAILUA-KONA, NORTH KONA, HAWAII

TYPICAL DUCT SECTIONS (CONT.)

Approved:

COUNTY ENGINEER, DPW, COUNTY OF HAWAII DATE

SHEET E-9 OF 46 SHEETS

FILE	POCKET	FOLDER	NO.

LAST SAVE: 02/05/13 @ 10:04:59 BY: GDT PLOT SC 1'-0"=1'
Z:\ACAD\PROJECTS\29124\v09_29124_Duct2

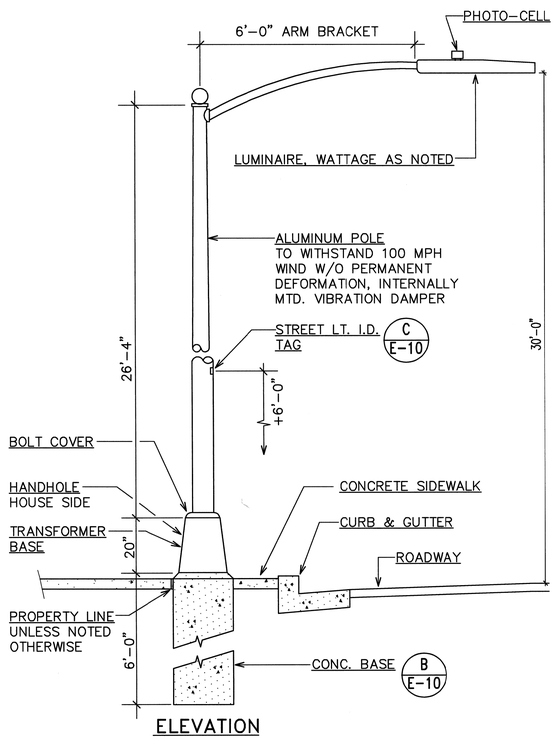

A E-10 STREET LIGHT STANDARD
NOT TO SCALE

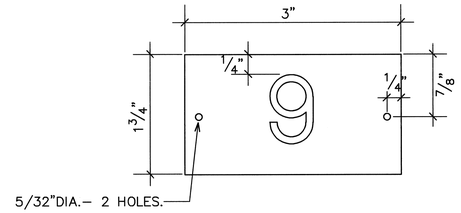

NOTES: (FOR METAL POLES ONLY)

1. USE 2 PLY PLASTIC – BLACK, WHITE.
2. NUMBER SIZE SHALL BE 1" HIGH AND ENGRAVED 1/8" WIDE, WHITE IN COLOR (NUMBER AS REQUIRED).
3. NOMENCLATURE SIZE SHALL BE 1/4" HIGH AND ENGRAVED 1/32" WIDE, WHITE 1N COLOR (WATTAGE IES DISTRIBUTION AND VOLTAGE AS REQUIRED AS NOTED).
4. ATTACH TO STEEL POLES WITH NO.7 CADMIUM PLATE DRIVE SCREWS. (a) ATTACH TO ALUMINUM POLE WITH NO.7 ALUMINUM DRIVE SCREWS.

C E-10 STREET LIGHT I.D. TAG DETAIL
NOT TO SCALE

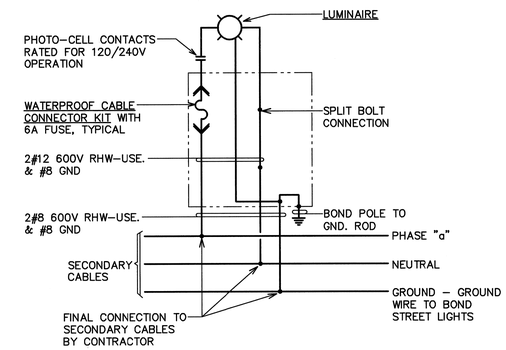

D E-10 STREET LIGHT CONNECTION DIAGRAM
NOT TO SCALE

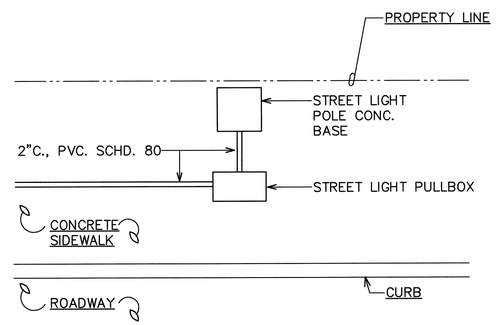

E E-10 STREET LIGHT SECONDARY CONNECTION
NOT TO SCALE

STREET LIGHT NOTES:

1. NO CHANGES WILL BE ALLOWED WITHOUT PRIOR APPROVAL FROM THE COUNTY OF HAWAII, DPW, TRAFFIC DIVISION.
2. ALL STREET LIGHT IDENTIFICATION TAG NUMBERING FOR METAL POLES SHALL START WITH "1" AND CONTINUE NUMERICALLY FOR EACH STREET IN THE SUBDIVISION. ALL STREET LIGHT I.D. TAG NUMBERING FOR WOODEN POLES SHALL BE IN ACCORDANCE WITH HELCO'S NUMBERING SYSTEM.
3. CONTRACTOR SHALL PROVIDE ALL NECESSARY SECONDARY CIRCUIT EXTENSIONS TO THE NEAREST HELCO SECONDARY. IF THE STREETLIGHTS ARE INSTALLED BEFORE HELCO INSTALLS THEIR SECONDARY, THE CONTRACTOR IS RESPONSIBLE FOR COORDINATION AND INFORMING HELCO OF STREET LIGHT LOCATIONS AND POLE CONTACTS.
4. FOR FINAL INSPECTION APPROVAL: ANY SUBDIVISION WITH TWO (2) OR MORE STREET LIGHTS, DEVELOPER SHALL SET UP ACCOUNT WITH HELCO; PROVIDING STREET NAME(S), POLE NUMBER(S), WATTAGES, AND BILLING ADDRESS TO ENERGIZE LIGHTS IN SUBDIVISION. DEVELOPER WILL ALSO BE RESPONSIBLE FOR ENERGY COST UNTIL STREET(S) ARE DEDICATED TO COUNTY WHERE UPON BILLING WILL BE TRANSFERED TO COUNTY.
5. THE CONTRACTOR SHALL INSCRIBE THE MONTH AND YEAR OF INSTALLATION ON PHOTOELECTRIC (PE) CELLS AND LAMPS. ALL PE'S SHALL HAVE THE NORTH INDEX FACING NORTH.
6. ALL LABOR AND MATERIALS SHALL BE WARRANTED FOR A MINIMUM OF ONE YEAR FROM DATE OF FINAL ACCEPTANCE.
7. ACCEPTABLE STREET LIGHT MATERIALS:
   A. LUMINARIES: MUST INCLUDE PE RECEPTACLE AND HPF BALLAST (EXCEPT LED).
      VISIONAIRE LIGHTING: (UNTIL SUPERSEDED BY APPROVED LED FIXTURE)
      ROADWAY–HI–55, ROADWAY–HI–90, ROADWAY–HI–180; GRAY FINISH (GY); AND REMOVABLE BALLAST TRAY (RBT)
      SPACING BETWEEN LIGHTS ON ALL NEW LAYOUTS – 130'–160'
      CHIPS AND WAFERS ENERGY SOLUTIONS: (REQUIRED FOR SIGNALIZED INTERSECTIONS AND MARKED CROSSWALKS)
      NOTES:
      1. REQUIRED WITHIN 1320 FEET OF A SIGNALIZED INTERSECTION
      2. REQUIRED WITHIN 100 FEET OF A MARKED CROSSWALK
      KS SERIES STAR FRIENDLY FILTERED LED ROADWAY LUMINAIRE.
      SPACING BETWEEN LIGHTS CALCULATED PER 2005 IESNA RP–8–00 ROADWAY LIGHTING GUIDE, SMALL TARGET VISIBILITY STANDARD.
   B. PHOTOELECTRIC CELLS: COMPLETELY SOLID STATE, FAIL "ON".
      FISHER PIERCE: FP–7790B SPS
   C. ALUMINUM POLES: INTERNAL MOUNTED VIBRATION DAMPER, MIN. 0.188 WALL THICKNESS. MUST BE APPROVED BY F.H.W.A. AND IN COMPLIANCE WITH THE 2001 AMENDED & ADOPTED AASHTO SPECIFICATIONS. 10–12 INCH BASE BOLT CIRCLE. ARM LENGTH SHALL BE PER PLAN.
      LEXINGTON: 2708–4580GT4 , 2208–4580GT4
      HAPCO: B783200 I, B782822–002. B76205–00 I, B76205–002, 73892–001, 7392–002, 7389–003
   D. TRANSFORMER BASES: ALUMINUM WITH 15" BASE BOLT CIRCLE. MUST BE APPROVED BY THE F.H.W.A. TO BE IN COMPLIANCE WITH THE 2001 AMENDED AND ADOPTED AASHTO BREAK AWAY SPECIFICATIONS.
      LEXINGTON 08R–1315B
      AKRON FOUNDRY TB1–17
   E. FIBERGLASS POLES:
      COMPOSITE MATERIALS TECHNOLOGY––HI–MB33–K–50–SE8–OHS–PC–MH
   F. WIRE: RHW–STRANDED–SIZE SHALL BE PER PLAN. WHITE TAPE DENOTING NEUTRAL SHALL BE A MINIMUM OF 12".
8. A SCALED DRAWING OF STREET LIGHT LOCATIONS (PREFERABLY ON ONE SHEET) AND DETAILS OF FIXTURE MOUNTING, LUMINARIES TYPE, ARM LENGTH, IDENTIFICATION TAGS. IF UNDERGROUND––CIRCUITS, FOUNDATION, BASE AND POLES WILL BE SUBMITTED TO THE TRAFFIC DIVISION AFTER PLAN APPROVAL AND BEFORE CONSTRUCTION BEGINS.
9. SHOP DRAWINGS SHALL BE SUBMITTED FOR APPROVAL BY TRAFFIC DIVISION.
10. ANY STREET LIGHT(S) REQUIRED ON EXISTING POLE(S) SHALL BE INSTALLED BY TRAFFIC DIVISION AT A COST OF $2,500.00 PER LIGHT. THE DEVELOPER SHALL SUBMIT A CHECK, PAYABLE TO COUNTY FINANCE DIRECTOR ALONG WITH SUBDIVISION NUMBER, DPW FOLDER NAME, TAX KEY AND POLE NUMBER(S).
11. WHEN STREET LIGHT(S) ARE INSTALLED ON A ROADWAY WITH EXISTING STREET LIGHT(S), THE STREET LIGHT INSTALLATION SHALL CONFORM TO THE NEAREST EXISTING STREET LIGHT CONFIGURATION ON THAT ROADWAY. EXCEPTIONS MAY BE CONSIDERED UPON REQUEST WITH THE TRAFFIC DIVISION.
12. WHEN STREET LIGHTS ARE INSTALLED ON ROADWAYS THAT ARE UNDER STATE JURISDICTION, THE DEVELOPER SHALL SUBMIT PLANS TO THE STATE DOT FOR APPROVAL. TRAFFIC DIVISION WILL INSTALL ON EXISTING POLE(S) WITH COSTS DEPENDANT ON HEIGHT OF POLE.
13. ALL OVERHEAD WIRING STREET LIGHT FIXTURES SHALL BE BONDED TO THE NEUTRAL WIRE. ALL BONDED STREET LIGHT FIXTURES SHALL HAVE A 2"X2" REFLECTIVE GREEN STICKER PLACED AT THE BASE OF WIRE OPENING ON THE ALUMINUM ARM, SIGNIFYING THAT THE STREET LIGHTS ARE BONDED.
14. ALL UNDERGROUND WIRING STREET LIGHTS SHALL BE GROUNDED TO PROVIDE A MAXIMUM 25 OHMS TO GROUND.
15. ALL WORK SHALL CONFROM TO THE LATEST NATIONAL ELECTRICAL CODE.

REV. 9/5/2012

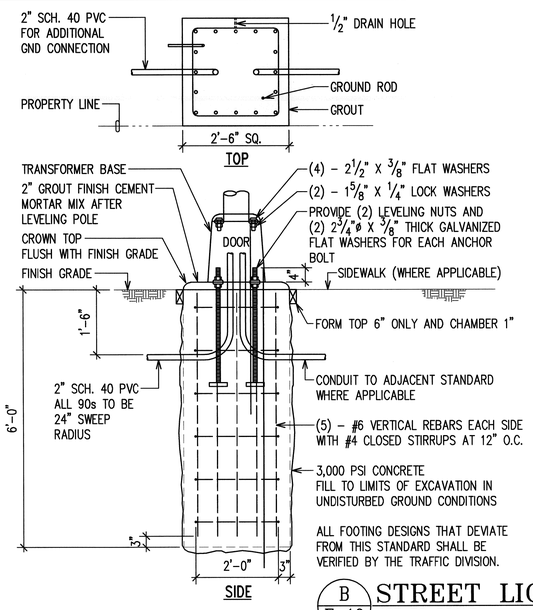

ALL FOOTING DESIGNS THAT DEVIATE FROM THIS STANDARD SHALL BE VERIFIED BY THE TRAFFIC DIVISION.

NOTES:

1. IF FOUNDATIONS ARE PRECAST, MANUFACTURER AND MATERIALS SUPPLIERS SHALL BE IN COMPLIANCE WITH THE MOST CURRENT EDITION OF THE HAWAII STANDARD SPECIFICATIONS FOR ROAD, BRIDGE AND PUBLIC WORKS CONSTRUCTION AND WHERE APPLICABLE THE NATIONAL PRECAST CONCRETE ASSOCIATION.
2. A MINIMUM 4,500 PSI 28–DAY COMPRESSION STRENGTH CONCRETE SHALL BE USED.
3. EACH FOUNDATION SHALL NOT BE HANDLED OR TRANSPORTED UNTIL AT LEAST 80% OF THE 28–DAY CONCRETE COMPRESSION STRENGTH HAS BEEN REACHED.
4. EACH FOUNDATION SHALL NOT BE INSTALLED UNTIL THE 28–DAY CONCRETE COMPRESSION STRENGTH HAS BEEN ACHIEVED.
5. CLSM OR EQUIVALENT SHALL BE USED TO BACKFILL AROUND EACH FOUNDATION.

B E-10 STREET LIGHT BASE DETAIL
NOT TO SCALE

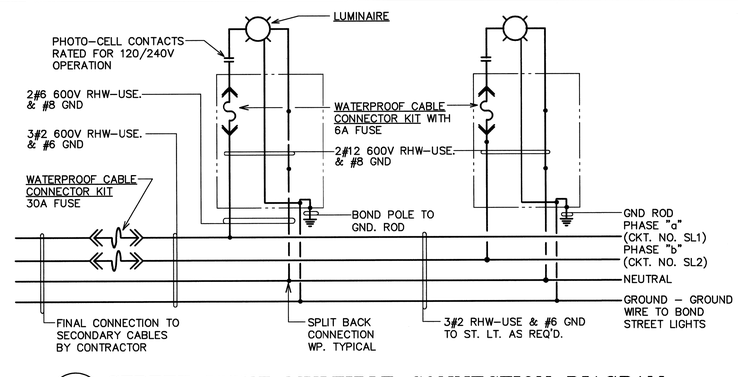

F E-10 STREET LIGHT MULTIPLE CONNECTION DIAGRAM
NOT TO SCALE

REVISION	DATE	DESCRIPTION	MADE BY	APPROVED

RONALD N. S. HO & ASSOCIATES, INC.
Electrical Engineers

STEVEN H. SAKAI
LICENSED PROFESSIONAL ENGINEER
No. 7037-E
HAWAII, U.S.A.

THIS WORK WAS PREPARED BY ME OR UNDER MY SUPERVISION

04/30/14
EXPIRATION DATE OF THE LICENSE

DEPARTMENT OF HAWAIIAN HOME LANDS
LA'I'ŌPUA VILLAGE 4
PHASE 1 – 'ĀKAU
TAX MAP KEY: (3) 7–4–21:10 & POR. 12
KAILUA–KONA, NORTH KONA, HAWAII

STREET LIGHT DETAIL

Approved:

COUNTY ENGINEER, DPW, COUNTY OF HAWAII — DATE

SHEET E-10 OF 46 SHEETS

FILE	POCKET	FOLDER	NO.

LAST SAVE: 02/05/13 @ 10:05:03 BY: GDT PLOT SC 1"=0"=1'
Z:\ACAD\PROJECTS\39124\v10_39124_SLD.dwg

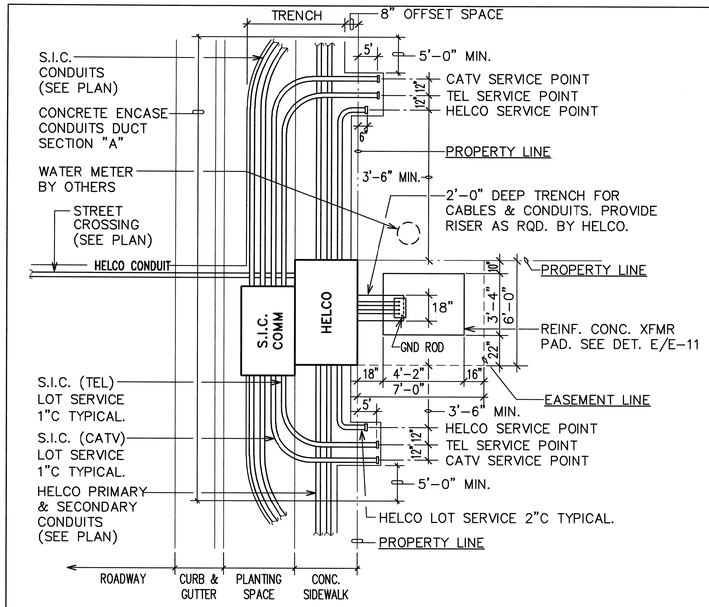

PLAN VIEW

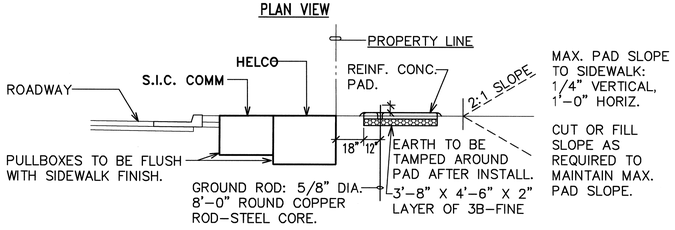

ELEVATION

NOTES:

1. REINFORCED CONCRETE TRANSFORMER PAD TO BE CONSTRUCTED AS SHOWN ON THIS SHEET & HELCO STANDARD DRAWING NO. 011249 & NO. 30-5001.
2. GRADE AND COMPACT LOT AS REQUIRED BY HELCO.
3. HIGHEST FRONT CORNER OF TRANSFORMER PAD LOT SHALL MATCH FINAL SIDEWALK GRADE.
4. CONCRETE ENCASE ALL HELCO PRIMARY DUCTS AND COMM 4" DUCTS THAT ARE NOT INSTALLED UNDER CONCRETE SIDEWALK.

A / E-11 TYPICAL TRANSFORMER PAD LOT

NOT TO SCALE

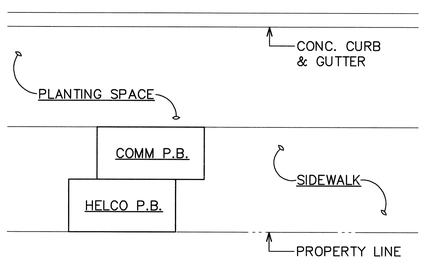

B / E-11 TYPICAL HANDHOLE GROUP ARRANGEMENT

NOT TO SCALE

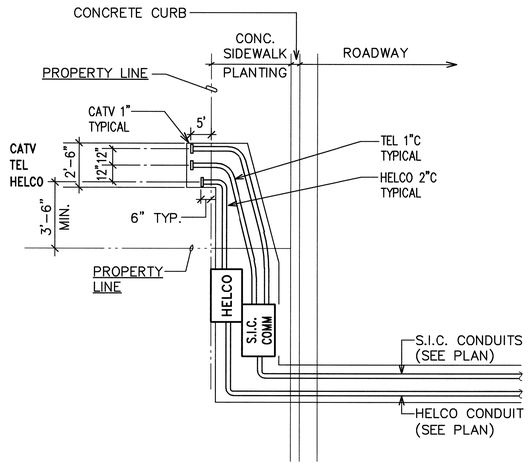

PLAN VIEW

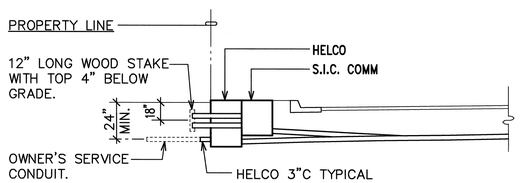

ELEVATION

NOTES:

CONCRETE ENCASE ALL HELCO PRIMARY DUCTS THAT ARE NOT INSTALLED UNDER CONCRETE SIDEWALK. CONCRETE ENCASE ALL COMM. DUCTS UNDER ROADWAYS.

C / E-11 TYPICAL LOT SERVICE

NOT TO SCALE

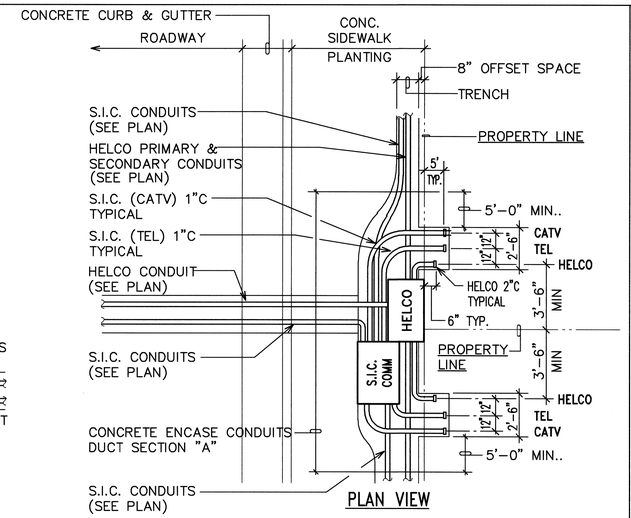

PLAN VIEW

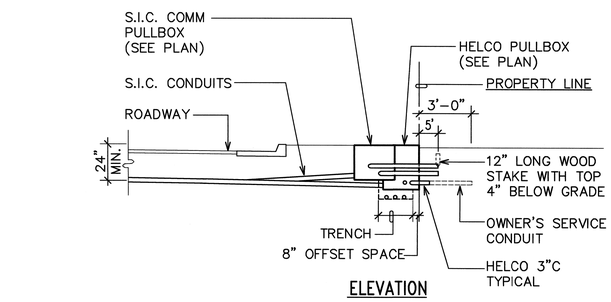

ELEVATION

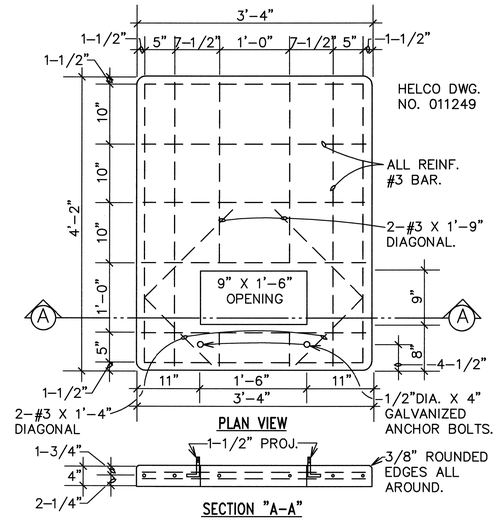

NOTES:

1. COMPRESSIVE STRENGTH OF CONCRETE : 3000 PSI IN 28 DAYS.
2. REINFORCING ROUND DEFORMED BAR SHALL BE CLEAN & NEW.
3. CURE CONCRETE BY APPROVED METHOD.
4. TOP OF CONC. PAD TO BE SMOOTH, TRUE & LEVEL, FREE FROM DEFECTS.
5. CONTRACTOR HAS OPTION OF FURNISHING CAST-IN-PLACE OR PRECAST.

E / E-11 CONCRETE TRANSFORMER PAD DETAIL

NOT TO SCALE

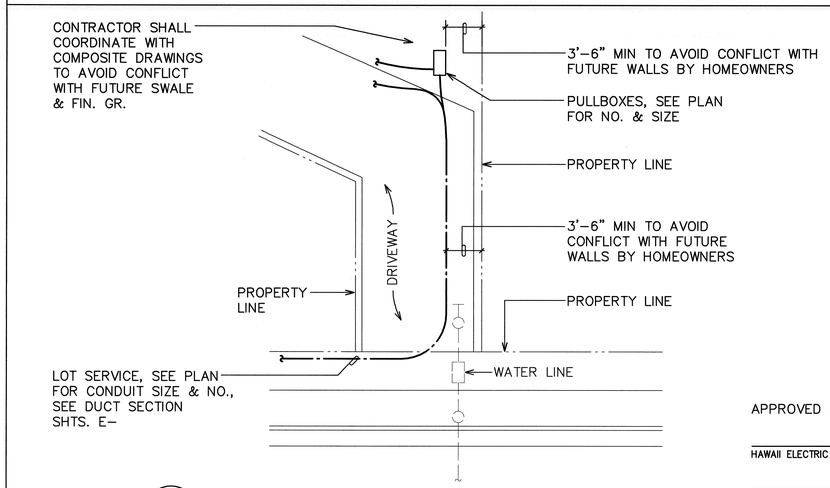

D / E-11 SERVICE CONDUITS @ FLAGLOTS

NOT TO SCALE

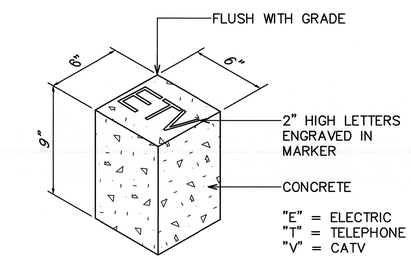

F / E-11 CONCRETE CONDUIT STUB-OUT MARKER

NOT TO SCALE

REVISION	DATE	DESCRIPTION	MADE BY	APPROVED

APPROVED BY:

HAWAII ELECTRIC LIGHT COMPANY — DATE

SANDWICH ISLES COMMUNICATIONS, INC — DATE

RONALD N. S. HO & ASSOCIATES, INC.
Electrical Engineers

STEVEN H. SAKAI
LICENSED PROFESSIONAL ENGINEER
No. 7637-E
HAWAII, U.S.A.

THIS WORK WAS PREPARED BY ME OR UNDER MY SUPERVISION

04/30/14
EXPIRATION DATE OF THE LICENSE

DEPARTMENT OF HAWAIIAN HOME LANDS
LA'I'ŌPUA VILLAGE 4
PHASE 1 – 'ĀKAU
TAX MAP KEY: (3) 7-4-21:10 & POR. 12
KAILUA-KONA, NORTH KONA, HAWAII

LOT SERVICE DETAIL, TRANSFORMER DETAIL

Approved:

COUNTY ENGINEER, DPW, COUNTY OF HAWAII — DATE

SHEET E-11 OF 40 SHEETS

FILE	POCKET	FOLDER	NO.

LAST SAVE: 02/05/13 @ 10:05:07 BY: GST PLOT SC 1=1'
Z:\ACAD\PROJECTS\29124\et1_29124_Lot5P.dwg

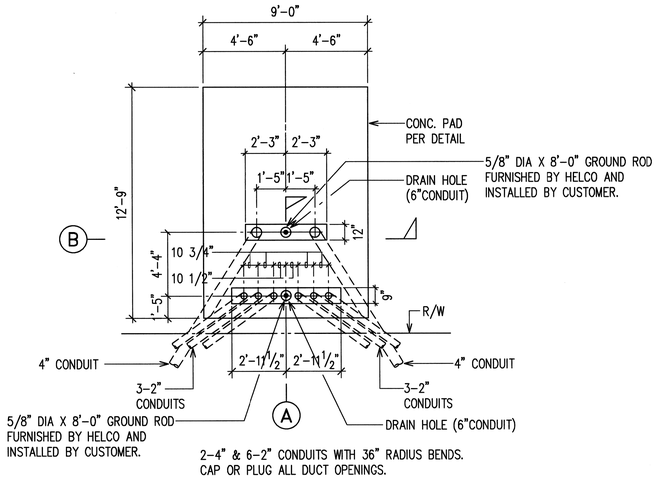

PLAN VIEW

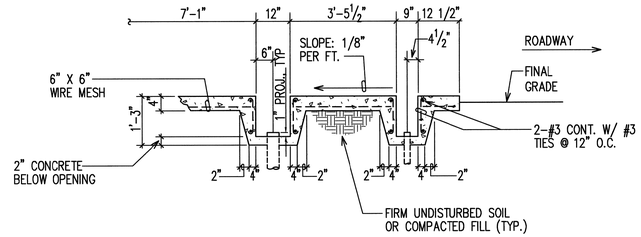

SECTION (A)

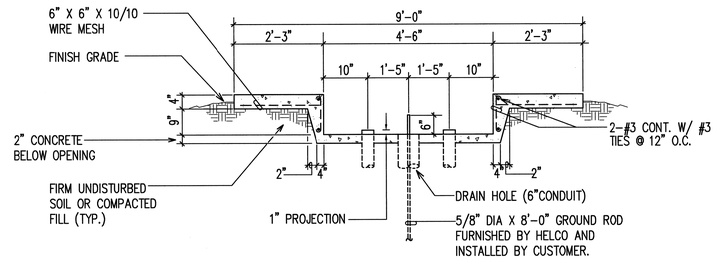

SECTION (B)

NOTES:

1. CONCRETE COMPRESSIVE STRENGTH: 3000 PSI IN 28 DAYS.
2. REINFORCING: CLEAN AND NEW ROUND DEFORMED BARS AND 6" X 6" WIRE MESH.
3. CONSTRUCTION TO COMPLY WITH ACI 318 AS AMENDED.
4. TOP OF CONCRETE PAD TO BE SMOOTH AND TRUE. OTHER EXPOSED SURFACES TO BE SMOOTH AND FREE FROM DEFECTS. SIDEWALK FINISH AS PER COUNTY SPECIFICATIONS. ROUND ALL EXPOSED EDGES TO 3/8" RADIUS.
5. MAINTAIN A MINIMUM CLEARANCE OF 4'-0" FROM THE SIDES & BACK OF PAD AND 8'0" FROM THE FRONT EDGE OF PAD.
6. LOCATE, SECURE, AND CAP ALL CONDUITS BEFORE POURING PAD.
7. IF THE GROUND RESISTANCE IS MORE THAN 25 OHMS, INSTALL ADDITIONAL GROUND RODS OR GROUND WIRE.

(A) PME-9 SWITCHING EQUIPMENT PAD DETAIL

E-12 NOT TO SCALE

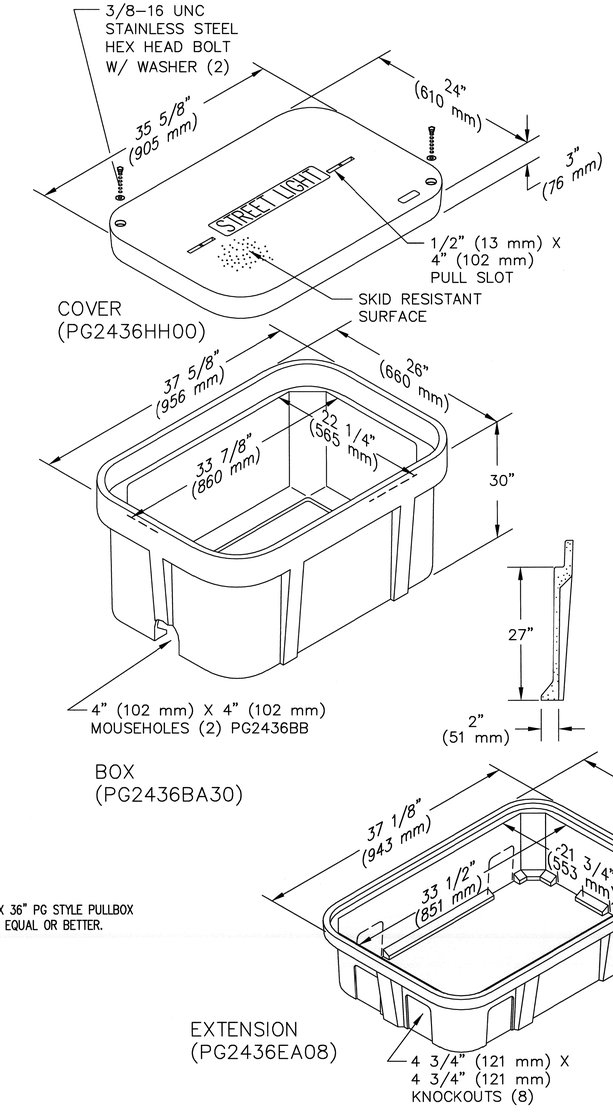

QUAZITE 24" X 36" PG STYLE PULLBOX OR APPROVED EQUAL OR BETTER.

(B) STREET LIGHT PULLBOX

E-12 NOT TO SCALE

REVISION	DATE	DESCRIPTION	MADE BY	APPROVED

RONALD N. S. HO & ASSOCIATES, INC.
Electrical Engineers

STEVEN H. SAKAI
LICENSED PROFESSIONAL ENGINEER
No. 7637-E
HAWAII, U.S.A.

THIS WORK WAS PREPARED BY ME OR UNDER MY SUPERVISION

04/30/14
EXPIRATION DATE OF THE LICENSE

DEPARTMENT OF HAWAIIAN HOME LANDS
LA'I'ŌPUA VILLAGE 4
PHASE 1 – 'ĀKAU
TAX MAP KEY: (3) 7-4-21:10 & POR. 12
KAILUA-KONA, NORTH KONA, HAWAII

AUTOMATIC SWITCHING EQUIPMENT
STREET LIGHT PULLBOX

Approved:

SHEET E-12 OF 46 SHEETS

FILE	POCKET	FOLDER	NO.

LAST SAVE: 02/05/13 @ 10:05:16 BY: IDIT PLOT SC 1=1
Z:\ACAD\PROJECTS\29154\v12_29154_Switchpad

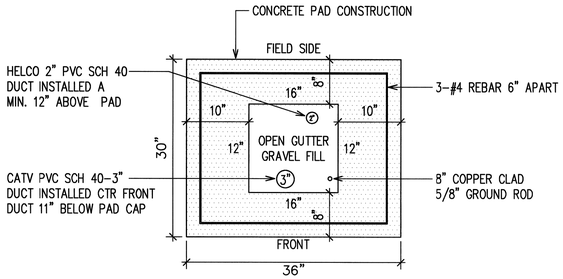

TOP VIEW

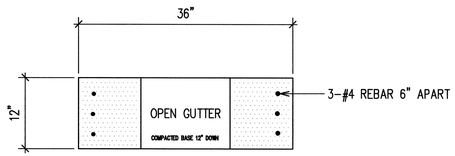

END VIEW

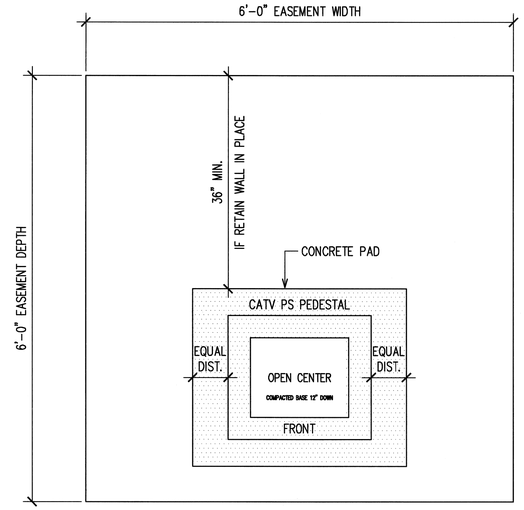

CATV POWER SUPPLY EASEMENT

CONSTRUCTION NOTES

1. GROUND ROD IS TO BE ON THE USER SIDE NOT HELCO SIDE OF THE PEDESTAL. TOP OF THE GROUND ROD TO BE 8" ABOVE COMPACTED LOWERED GRAVEL IN PAD AND LOCATED ON THE FRONT CATV SIDE.
2. GROUND WIRE TO ORIGINATE FROM THE GROUND ROD AND TO BE CONNECTED TO HELCO SIDE THROUGH A MODIFIED HOLE IN THE CENTER PEDESTAL PLATE. GROUND WIRE SIZE WILL BE #6 CONDUCTOR.
3. HELCO CONDUIT SHOULD BE EXTENDING 12" MIN. ABOVE CONCRETE PAD WILL BE ADJUSTED AT INSTALLATION
4. CATV DUCT TO BE LOCATED AT FRONT OF PAD OPENING ON THE CATV SIDE OF THE PEDESTAL CENTER ACCESS AND TO BE 1" ABOVE THE RECESSED GRAVEL GRADE.
5. LOCATION OF CONDUITS FOR BOTH CATV AND HELCO WILL VARY WITHIN OPEN AREA ACCORDING TO LOCATION AND DIRECTION OF THE CONDUIT SOURCE.
6. CATV HOUSING TO BE ATTACHED BY DRILLED IN EXPANDABLE ANCHORS.
7. HELCO SECONDARY FEEDER WILL BE SINGLE PHASE 220V FEEDER SIZE WILL BE MINIMUM #6 CONDUCTORS FOR RUNS LESS THAN 100'.
8. POWER SUPPLY PEDESTAL WILL BE PROVIDED AND INSTALLED BY OCEANIC CABLE PERSONEL. ELECTRICAL CONTRACTOR TO INSTALL CONCRETE PAD, GROUND ROD, AND DUCTS JOINING CATV EQUIPMENT PAD TO HELCO TRANSFORMER PAD AND CATV PULL BOX DURING NEW DEVELOPMENT INFRASTRUCTURE CONSTRUCTION.
9. ELECTRICAL CONTRACTOR TO COMPLETE ALL NECESSARY BACKFILL OF COMPACTED MATERIAL BEFORE CONSTRUCTION OF THE CONCRETE PAD.

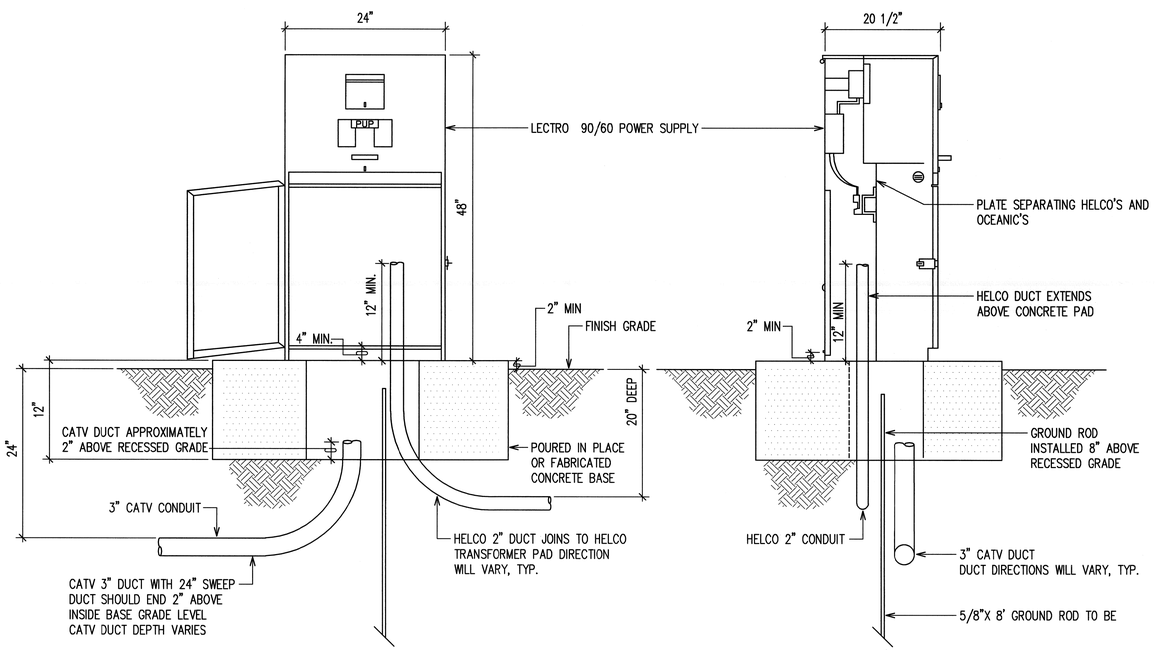

POWER SUPPLY PAD DESIGN

CATV POWER SUPPLY PEDESTAL DETAILS

NOT TO SCALE

REVISION	DATE	DESCRIPTION	MADE BY	APPROVED

RONALD N. S. HO & ASSOCIATES, INC.
Electrical Engineers

STEVEN H. SAKAI
LICENSED PROFESSIONAL ENGINEER
No. 7637-E
HAWAII, U.S.A.

THIS WORK WAS PREPARED BY ME OR UNDER MY SUPERVISION

04/30/14
EXPIRATION DATE OF THE LICENSE

DEPARTMENT OF HAWAIIAN HOME LANDS
LA'I'ŌPUA VILLAGE 4
PHASE 1 – 'ĀKAU
TAX MAP KEY: (3) 7-4-21:10 & POR. 12
KAILUA-KONA, NORTH KONA, HAWAII

CATV POWER SUPPLY

Approved:

SHEET E-13 OF 46 SHEETS

FILE	POCKET	FOLDER	NO.

LAST SAVE: 02/05/13 @ 10:05:21 BY: GDT PLOT SC 1'=0"=1'
Z:\ACAD\PROJECTS\29124\st3_29124_CATV PS

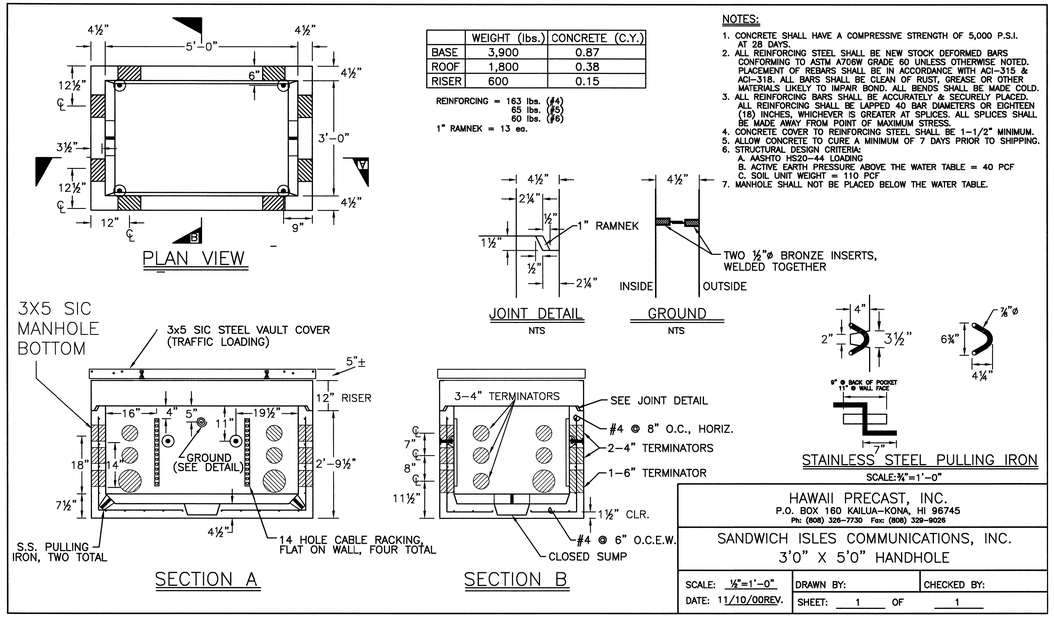

	WEIGHT (lbs.)	CONCRETE (C.Y.)
BASE	3,900	0.87
ROOF	1,800	0.38
RISER	600	0.15

REINFORCING = 163 lbs. (#4)
65 lbs. (#5)
60 lbs. (#6)
1" RAMNEK = 13 ea.

NOTES:

1. CONCRETE SHALL HAVE A COMPRESSIVE STRENGTH OF 5,000 P.S.I. AT 28 DAYS.
2. ALL REINFORCING STEEL SHALL BE NEW STOCK DEFORMED BARS CONFORMING TO ASTM A706W GRADE 60 UNLESS OTHERWISE NOTED. PLACEMENT OF REBARS SHALL BE IN ACCORDANCE WITH ACI–315 & ACI–318. ALL BARS SHALL BE CLEAN OF RUST, GREASE OR OTHER MATERIALS LIKELY TO IMPAIR BOND. ALL BENDS SHALL BE MADE COLD.
3. ALL REINFORCING BARS SHALL BE ACCURATELY & SECURELY PLACED. ALL REINFORCING SHALL BE LAPPED 40 BAR DIAMETERS OR EIGHTEEN (18) INCHES, WHICHEVER IS GREATER AT SPLICES. ALL SPLICES SHALL BE MADE AWAY FROM POINT OF MAXIMUM STRESS.
4. CONCRETE COVER TO REINFORCING STEEL SHALL BE 1–1/2" MINIMUM.
5. ALLOW CONCRETE TO CURE A MINIMUM OF 7 DAYS PRIOR TO SHIPPING.
6. STRUCTURAL DESIGN CRITERIA:
   A. AASHTO HS20–44 LOADING
   B. ACTIVE EARTH PRESSURE ABOVE THE WATER TABLE = 40 PCF
   C. SOIL UNIT WEIGHT = 110 PCF
7. MANHOLE SHALL NOT BE PLACED BELOW THE WATER TABLE.

HAWAII PRECAST, INC.
P.O. BOX 160 KAILUA–KONA, HI 96745
Ph: (808) 326–7730 Fax: (808) 329–9026

SANDWICH ISLES COMMUNICATIONS, INC.
3'0" X 5'0" HANDHOLE

SCALE: ½"=1'–0" | DRAWN BY: | CHECKED BY:
DATE: 11/10/00REV. | SHEET: 1 OF 1

UH 3x5

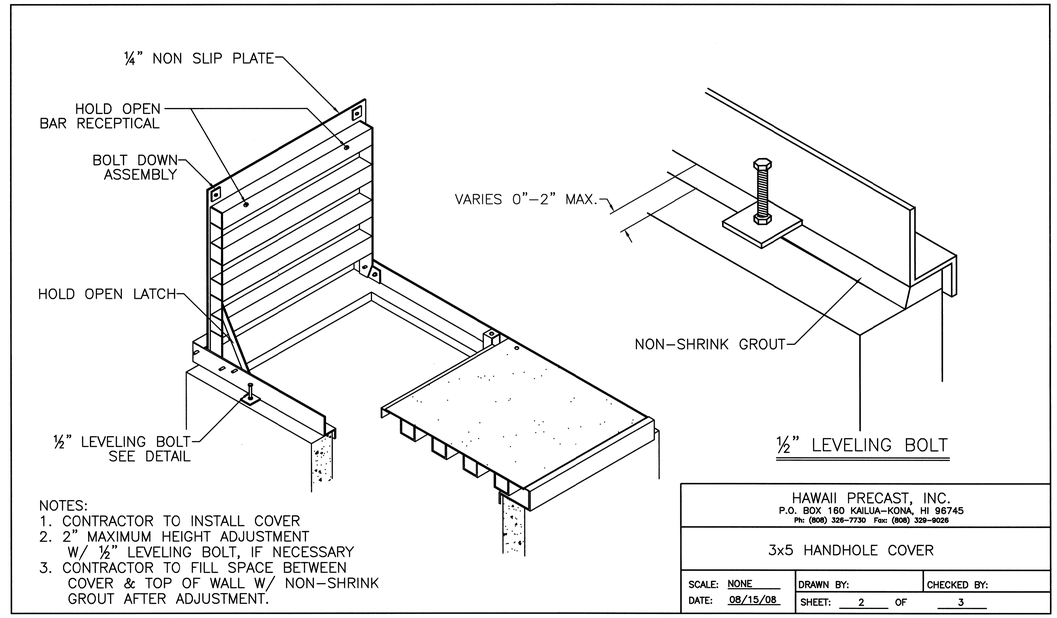

NOTES:
1. CONTRACTOR TO INSTALL COVER
2. 2" MAXIMUM HEIGHT ADJUSTMENT W/ ½" LEVELING BOLT, IF NECESSARY
3. CONTRACTOR TO FILL SPACE BETWEEN COVER & TOP OF WALL W/ NON–SHRINK GROUT AFTER ADJUSTMENT.

HAWAII PRECAST, INC.
P.O. BOX 160 KAILUA–KONA, HI 96745
Ph: (808) 326–7730 Fax: (808) 329–9026

3x5 HANDHOLE COVER

SCALE: NONE | DRAWN BY: | CHECKED BY:
DATE: 08/15/08 | SHEET: 2 OF 3

UH 3x5 COVER

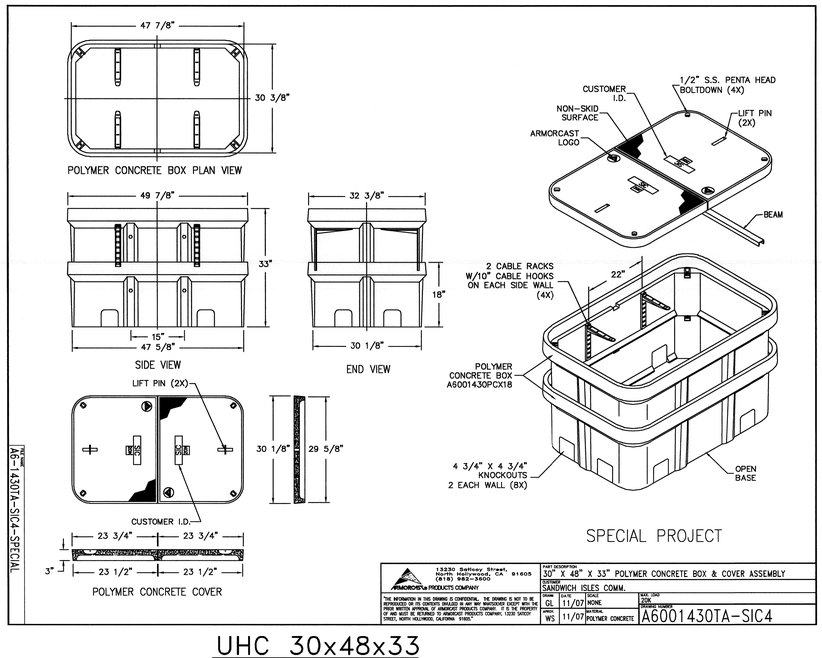

ARMORCAST PRODUCTS COMPANY 13230 Saticoy Street, North Hollywood, CA 91605 (818) 982-3600	PART DESCRIPTION: 30" X 48" X 33" POLYMER CONCRETE BOX & COVER ASSEMBLY		
	CUSTOMER: SANDWICH ISLES COMM.		
"THE INFORMATION IN THIS DRAWING IS CONFIDENTIAL. THE DRAWING IS NOT TO BE REPRODUCED OR IN CONTACT SHALLED IN ANY WAY WHATSOEVER EXCEPT WITH THE PRIOR WRITTEN APPROVAL OF ARMORCAST PRODUCTS COMPANY. IT IS THE PROPERTY OF AND MUST BE RETURNED TO ARMORCAST PRODUCTS COMPANY, 13230 SATICOY STREET, NORTH HOLLYWOOD, CALIFORNIA 91605."	DRAWN: GL 11/07	SCALE: NONE	MAT'L CODE: 20K
	APPR: WS 11/07	MATERIAL: POLYMER CONCRETE	DWG. NO.: A6001430TA-SIC4

UHC 30x48x33

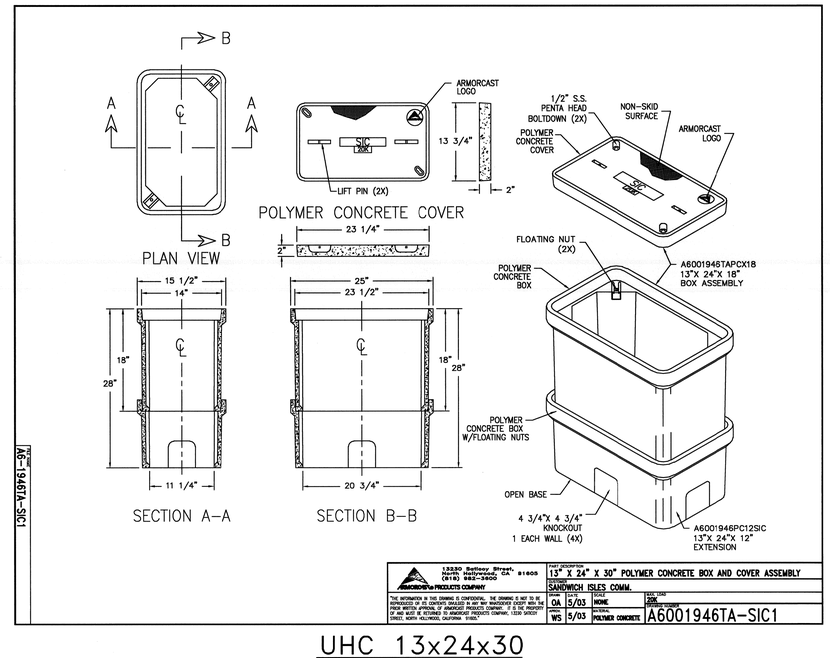

ARMORCAST PRODUCTS COMPANY 13230 Saticoy Street, North Hollywood, CA 91605 (818) 982-3600	PART DESCRIPTION: 13" X 24" X 30" POLYMER CONCRETE BOX AND COVER ASSEMBLY		
	CUSTOMER: SANDWICH ISLES COMM.		
"THE INFORMATION IN THIS DRAWING IS CONFIDENTIAL. THE DRAWING IS NOT TO BE REPRODUCED OR IN CONTACT SHALLED IN ANY WAY WHATSOEVER EXCEPT WITH THE PRIOR WRITTEN APPROVAL OF ARMORCAST PRODUCTS COMPANY. IT IS THE PROPERTY OF AND MUST BE RETURNED TO ARMORCAST PRODUCTS COMPANY, 13230 SATICOY STREET, NORTH HOLLYWOOD, CALIFORNIA 91605."	DRAWN: OA 5/03	SCALE: NONE	MAT'L CODE: 20K
	APPR: WS 5/03	MATERIAL: POLYMER CONCRETE	DWG. NO.: A6001946TA-SIC1

UHC 13x24x30

FOR REFERENCE ONLY

APPROVED BY:

SANDWICH ISLES COMMUNICATIONS, INC DATE

REVISION	DATE	DESCRIPTION	MADE BY	APPROVED

RONALD N. S. HO & ASSOCIATES, INC.
Electrical Engineers

DEPARTMENT OF HAWAIIAN HOME LANDS
LA'I'ŌPUA VILLAGE 4
PHASE 1 – 'ĀKAU
TAX MAP KEY: (3) 7–4–21:10 & POR. 12
KAILUA–KONA, NORTH KONA, HAWAII

REFERENCE ONLY

SIC REFERENCE DRAWINGS I

Approved:

THIS WORK WAS PREPARED BY ME OR UNDER MY SUPERVISION

04/30/14
EXPIRATION DATE OF THE LICENSE

SHEET E-14 OF 46 SHEETS

FILE	POCKET	FOLDER	NO.

LAST SAVE: 02/05/13 @ 10:05:32 BY: (DO) PLOT SC: 1"=0"=1"
Z:\CAD\PROJECTS\2012\#14_29124_Rafelich XREFS: A6-19461A-SIC2 A6-14307A-SIC4-SPECIAL X_UH3X5 COVER=27066A\X_UH3X5 COVER X_UH3X5 BOX DETAIL (NEW)=27066A\X_UH3X5 BOX DETAIL (NEW)

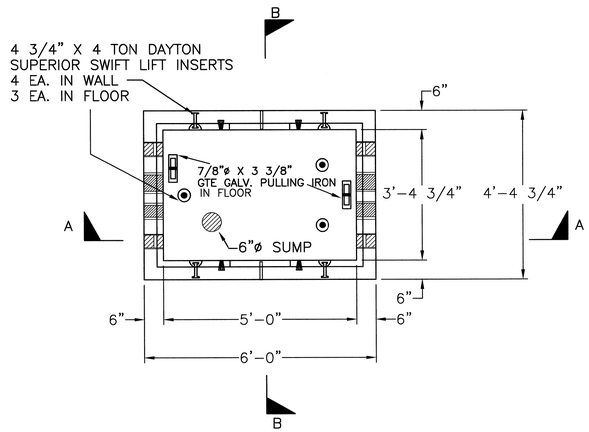

PLAN VIEW

NOTES:

1. CONCRETE TO BE DESIGNED IN ACCORDANCE WITH AASHTO H-20-44 TRAFFIC BRIDGE LOADING USING 5,500 PSI COMPRESSIVE CONCRTE, CONCRETE SHALL HAVE A COMPRESSIVE STRENGTH OF 5,500 PSI @ 28 DAYS

2. ALL REINFORCING STEEL SHALL BE NEW STOCK DEFORMED BARS CONFORMING TO THE HANDHOLE MANUFACTURERS SPECIFICATIONS. ALL BARS SHALL BE CLEAN OF RUST, GREASE OR OTHER MATERIALS LIKELY TO IMPAIR BOND. ALL BENDS SHALL BE MADE COLD

3. ALL REINFORCING BARS SHALL BE ACCURATELY & SECURELY PLACED. ALL REINFORCING BARS SHALL BE LAPPED 40 BAR DIAMETERS OR EIGHTEEN(18) INCHES, WHICHEVER IS GREATER AT SPLICES. ALL SPLICES SHALL BE MADE AWAY FROM POINT OF MAXIMUM STRESS.

4 CONCRETE COVER TO REINFORCING STEEL SHALL BE 1 ½" MINIMUM.

5. COVER TO BE DESIGNED FOR H-20-44 TRAFFIC BRIDGE LOADING CONSISTING OF CAST IN PLACE GALVANIZED FRAME AND SIX (6) EA. 2"X2" GALVANIZED SLIP-NOT COVERS WITH "SIC" LOGO WELDED ON TOP.

6. FOUR INCH (4") TERMINATORS AS FOLLOWS: SIX (6) PER SHORT WALL ON MIDDLE SECTION OF BOX AS INDICATED ON DRAWING.

7. 6"X6" KNOCKOUTS AS FOLLOWS: TWO (2) PER LONG WALL AS INDICATED ON DRAWING.

8. STAINLESS STEEL PULLING IRONS, LOCATED AS INDICTED ON DRAWING.

9. ½"x2" BRONZE INSERTS PLACED AND WELDED TOGETHER FOR GROUNDING AS INDICTED ON GROUNDING DETAIL. GROUNDING BOLTS ARE TO BE PROVIDED WITH BOX.

10. ½" PLASTIC RACKING INSERTS TO BE INCLUDED AS FOLLOWS: FOUR (4) PER LONG WALL WITH 21" SPACING AS SHOWN ON DRAWING.

11. HANDHOLE TO BE PLACED ON A SIX INCH (6") BASE OF CRUSHED GRAVEL FOR EVEN LOAD DISTRIBUTION AND EASE OF INSTALLATION.

HAWAII PRECAST, INC.
P.O. BOX 160 KAILUA-KONA, HI 96745
Ph: (808) 326-7730 Fax: (808) 329-9026

4 X 6 S.I.C. HANDHOLE

SCALE: 1/2"=1'-0"	DRAWN BY:	CHECKED BY:
DATE: 03-29-06	SHEET: 1 OF 2	

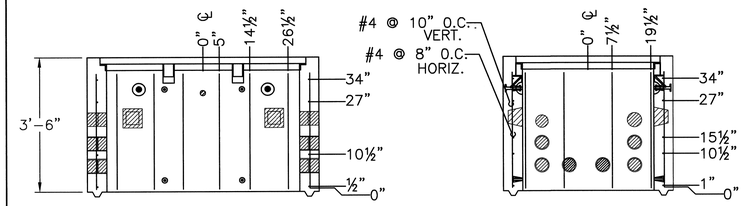

SECTION A

SECTION B

HAWAII PRECAST, INC.
P.O. BOX 160 KAILUA-KONA, HI 96745
Ph: (808) 326-7730 Fax: (808) 329-9026

4 X 6 S.I.C. HANDHOLE

SCALE: 1/2"=1'-0"	DRAWN BY:	CHECKED BY:
DATE: 03-29-06	SHEET: 1 OF 1	

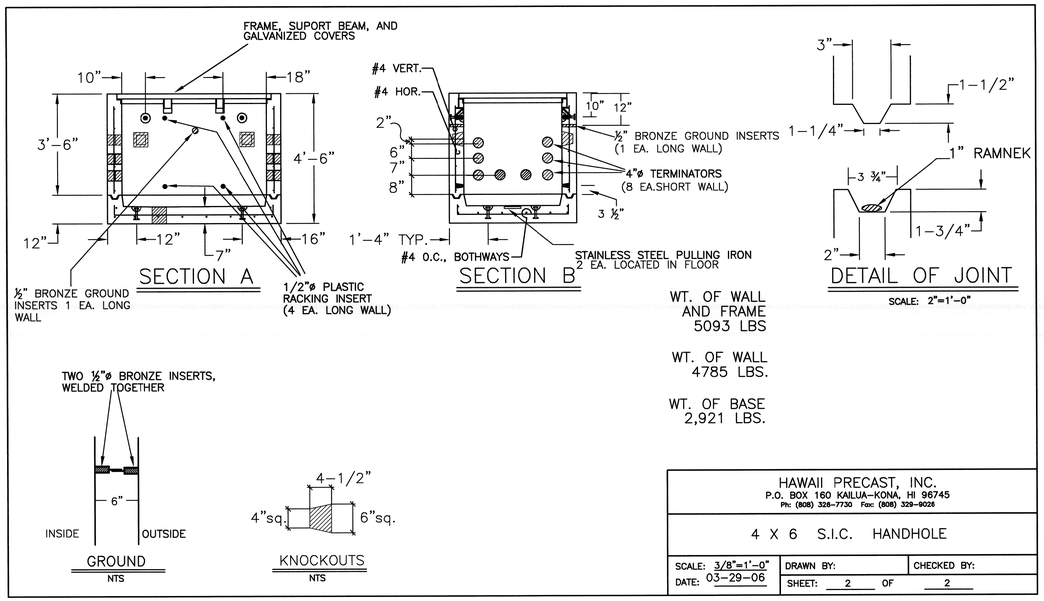

WT. OF WALL AND FRAME 5093 LBS

WT. OF WALL 4785 LBS.

WT. OF BASE 2,921 LBS.

HAWAII PRECAST, INC.
P.O. BOX 160 KAILUA-KONA, HI 96745
Ph: (808) 326-7730 Fax: (808) 329-9026

4 X 6 S.I.C. HANDHOLE

SCALE: 3/8"=1'-0"	DRAWN BY:	CHECKED BY:
DATE: 03-29-06	SHEET: 2 OF 2	

UH 4x6

APPROVED BY:

SANDWICH ISLES COMMUNICATIONS, INC DATE

REVISION	DATE	DESCRIPTION	MADE BY	APPROVED

RONALD N. S. HO & ASSOCIATES, INC.
Electrical Engineers

DEPARTMENT OF HAWAIIAN HOME LANDS
LA'I'ŌPUA VILLAGE 4
PHASE 1 – 'ĀKAU
TAX MAP KEY: (3) 7-4-21:10 & POR. 12
KAILUA-KONA, NORTH KONA, HAWAII

REFERENCE ONLY

SIC REFERENCE DRAWINGS II

Approved:

THIS WORK WAS PREPARED BY ME OR UNDER MY SUPERVISION

04/30/14
EXPIRATION DATE OF THE LICENSE

SHEET E-15 OF 46 SHEETS

FILE	POCKET	FOLDER	NO.

FOR REFERENCE ONLY

LAST SAVE: 02/05/13 @ 10:04:01 BY: IDT PLOT SC: 1"=0"=1'
Z:\CAD\PROJECTS\29134\v15_29134_Rev4x02 XREFS: X_A16_SIC_HANDHOLE_P3REV1=27066A\X_A16_SIC_HANDHOLE_P3REV1 X_A16_SIC_HANDHOLE_P2REV1=27066A\X_A16_SIC_HANDHOLE_P2REV1 X_A16_SIC_HANDHOLE_P1REV1=27066A\X_A16_SIC_HANDHOLE_P1REV1