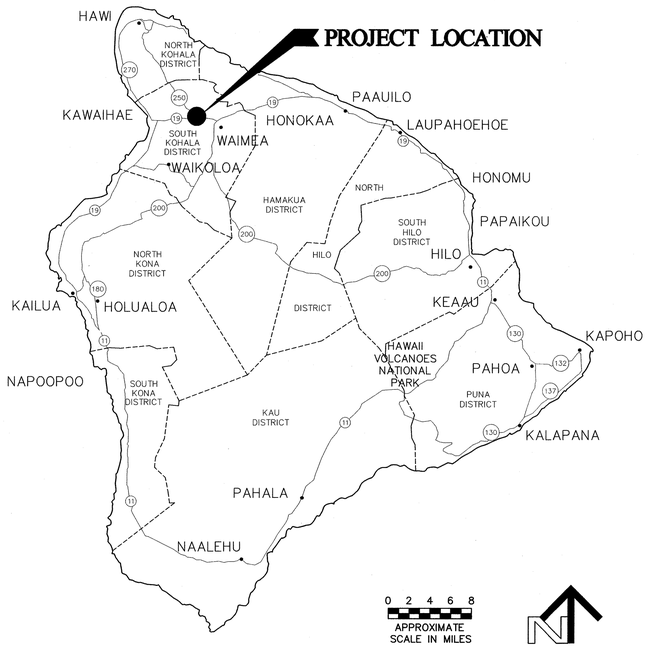

VICINITY MAP

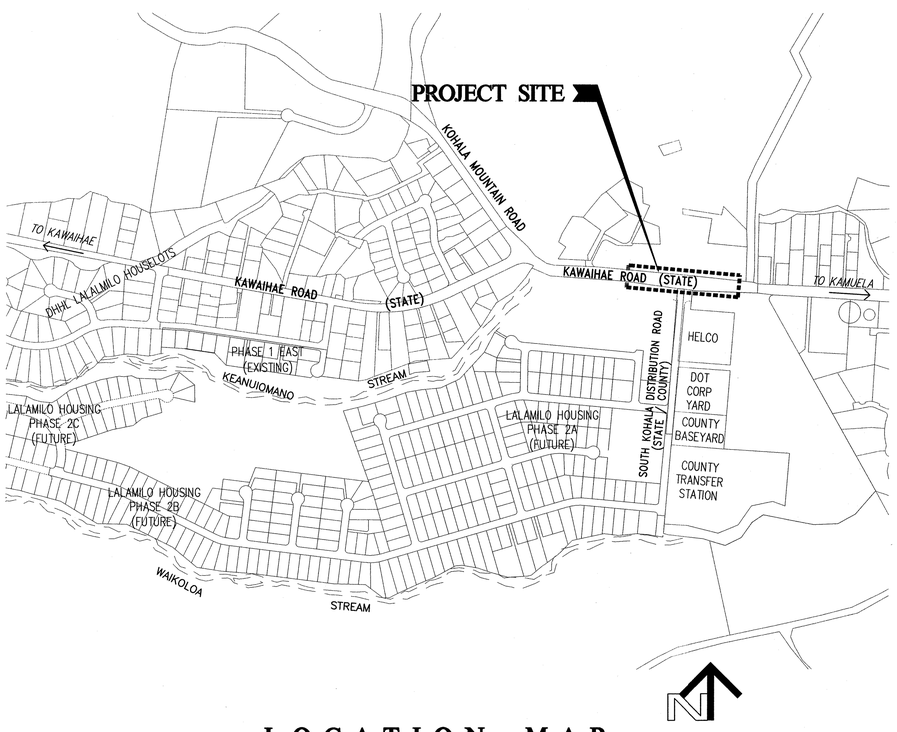

LOCATION MAP

NOT TO SCALE

CONSTRUCTION PLANS

FOR

LALAMILO HOUSING PHASE 2A KAWAIHAE ROAD IMPROVEMENTS AT SOUTH KOHALA DISTRIBUTION ROAD

WAIMEA, SOUTH KOHALA, ISLAND OF HAWAII, HAWAII

OWNER AND DEVELOPER: DEPARTMENT OF HAWAIIAN HOME LANDS

Community Planning and Engineering, Inc.
Engineering Design | Construction Management | Infrastructure Planning
1100 Alakea Street, Sixth Floor Honolulu, Hawaii

INDEX TO DRAWINGS

DESCRIPTION	DWG NO.	SHEET NO.
TITLE SHEET	T-1	1
GENERAL NOTES	C-1 & C-2	2-3
REMOVAL PLAN	C-3	4
SITE LAYOUT AND GRADING & EROSION CONTROL PLAN	C-4	5
TRAFFIC SIGNS AND PAVEMENT MARKINGS PLAN	C-5	6
TYPICAL ROADWAY SECTIONS	C-6	7
TRAFFIC CONTROL PLANS	C-7 & C-8	8-9
TRAFFIC SIGNS AND PAVEMENT MARKINGS DETAILS	C-9	10
MISCELLANEOUS DETAILS	C-10	11
ELECTRICAL SYMBOLS, MAPS, NOTES	E-1	12
SIC & COUNTY STREET LIGHT NOTES	E-2	13
ELECTRICAL DISTRIBUTION PLAN	E-3	14
STREET LIGHT DETAILS	E-4	15

APPROVED

M W Sumera — JAN 9 2012
for CHAIRMAN, HAWAIIAN HOMES COMMISSION
DEPARTMENT OF HAWAIIAN HOME LANDS
STATE OF HAWAII
DATE

11/2/11
for ADMINISTRATOR, HIGHWAYS DIVISION
DEPARTMENT OF TRANSPORTATION, STATE OF HAWAII
(APPROVAL GRANTED FOR CONSTRUCTION WITHIN STATE R-O-W)
APPROVAL LETTER NO. _____ DATE: _____
DATE

LALAMILO HOUSING PHASE 2A KAWAIHAE ROAD IMPROVEMENTS AT SOUTH KOHALA DISTRIBUTION ROAD

CONSTRUCTION NOTES

1. THE ENGINEER RESERVES THE RIGHT TO MAKE CHANGES TO THE DRAINAGE SYSTEM AS SUCH CHANGES ARE FOUND TO BE NECESSARY AS THE LAND IS CLEARED AND EROSION CONTROL CONSTRUCTION PROGRESSES.

2. ALL CONSTRUCTION LINES, GRADES AND SURVEY MONUMENT STAKEOUTS SHALL BE MADE BY LICENSED SURVEYORS.

3. THE CONTRACTOR SHALL NOTIFY THE ENGINEER SUFFICIENTLY IN ADVANCE OF OPENING ANY OR UTILIZING EXISTING BORROW PITS OR ON SITE BORROW, SO THAT A DETERMINATION CAN BE MADE AS TO THE SUITABILITY OF THE BORROW MATERIAL TO BE INCORPORATED INTO THE ROAD CONSTRUCTION.

4. THE CONTRACTOR SHALL CONDUCT ALL TESTS AS REQUESTED BY THE ENGINEER AND BE RESPONSIBLE FOR ALL EXPENSES INCURRED IN CONDUCTING THESE TESTS.

5. THE CONTRACTOR SHALL VERIFY THE LOCATION OF ALL EXISTING UTILITIES, WHETHER SHOWN ON THE PLAN OR NOT, AND SHALL BE RESPONSIBLE FOR THE REPAIR OR REPLACEMENT OF SAME IN THE EVENT OF DAMAGES DUE TO HIS CONSTRUCTION PRACTICES. THE CONTRACTOR SHALL COORDINATE HIS WORK WITH THE RESPECTIVE UTILITY COMPANIES.

6. THE CONTRACTOR SHALL PROVIDE AND INSTALL ALL TRAFFIC CONTROL DEVICES IN CONFORMANCE WITH THE "MANUAL ON UNIFORM TRAFFIC CONTROL DEVICES FOR STREETS AND HIGHWAYS," AND TO THE SATISFACTION OF THE ENGINEER.

7. ALL VEGETATION, INCLUDING TREES, SHALL BE REMOVED FROM WITHIN THE ENTIRE GRADED ROADWAY RIGHT-OF-WAY.

NOTES FOR CONSTRUCTION WITHIN STATE RIGHT-OF-WAY

1. PERMIT CONSTRUCTION PLANS SHALL BE VALID FOR A PERIOD OF ONE YEAR FROM THE DATE OF APPROVAL THEREOF. IN THE EVENT CONSTRUCTION DOES NOT COMMENCE WITHIN THIS ONE-YEAR PERIOD, THE APPLICANT WILL BE REQUIRED TO RESUBMIT HIS CONSTRUCTION PLANS TO THE STATE HIGHWAYS DIVISION, HAWAII DISTRICT OFFICE, FOR REVIEW AND APPROVAL.

2. THE CONTRACTOR SHALL OBTAIN A PERMIT TO PERFORM WORK UPON STATE HIGHWAYS FROM THE STATE HIGHWAY DIVISION, HAWAI'I DISTRICT OFFICE, AT 50 MAKAALA STREET, HILO, HI 96720, BEFORE STARTING ANY WORK WITHIN THE STATE HIGHWAY RIGHT-OF-WAY.

3. UNLESS OTHERWISE SPECIFIED, ALL REFERENCE TO "ENGINEER" SHALL REFER TO THE HAWAII DISTRICT ENGINEER, AT THE ABOVE ADDRESS, OR HIS REPRESENTATIVE. ALL REFERENCES TO "TRAFFIC" SHALL INCLUDE BOTH MOTORIZED AND NON-MOTORIZED TRAFFIC (INCLUDING PEDESTRIANS AND BICYCLISTS), WHERE THE CONTEXT MAY SO APPLY.

4. CONSTRUCTION AND RESTORATION OF ALL EXISTING HIGHWAY FACILITIES WITHIN STATE RIGHT-OF-WAY SHALL BE DONE IN ACCORDANCE WITH ALL APPLICABLE SECTIONS OF THE CURRENT STANDARD SPECIFICATIONS FOR ROAD, BRIDGE, AND PUBLIC WORKS CONSTRUCTION, AND THE SPECIFICATIONS FOR INSTALLATION OF MISCELLANEOUS IMPROVEMENTS WITHIN STATE HIGHWAYS, OF THE STATE DEPARTMENT OF TRANSPORTATION'S HIGHWAYS DIVISION.

5. THE CONTRACTOR SHALL PROVIDE, INSTALL, AND MAINTAIN ALL NECESSARY SIGNS, LIGHTS, FLARES, BARRICADES, MARKERS, CONES, AND OTHER PROTECTIVE DEVICES AND SHALL TAKE ALL NECESSARY PRECAUTIONS FOR THE PROTECTION, CONVENIENCE, AND SAFETY OF THE TRAVELING PUBLIC. ALL SUCH PROTECTIVE MEASURES AND DEVICES SHALL CONFORM WITH THE "ADMINISTRATIVE RULES OF HAWAI'I GOVERNING THE USE OF TRAFFIC CONTROL DEVICES AT WORK SITES ON, OR ADJACENT TO, PUBLIC STREETS AND HIGHWAYS", ADOPTED BY THE DIRECTOR OF TRANSPORTATION, AND THE CURRENT U.S. FEDERAL HIGHWAY ADMINISTRATION "MANUAL ON UNIFORM TRAFFIC CONTROL DEVICES FOR STREETS AND HIGHWAYS, PART VI – STANDARDS AND GUIDES FOR TRAFFIC CONTROLS FOR STREET AND HIGHWAY CONSTRUCTION, MAINTENANCE, UTILITY, AND INCIDENTAL MANAGEMENT OPERATIONS". IF TRAFFIC MAY BE AFFECTED IN ANY WAY DURING CONSTRUCTION, A TRAFFIC CONTROL PLAN SHALL BE INCLUDED INTO THE CONSTRUCTION PLANS AND MUST BE APPROVED BY THE ENGINEER PRIOR TO THE ISSUANCE OF THE PERMIT.

6. ALL REGULATORY, GUIDE, CONSTRUCTION SIGNS, AND BARRICADES SHALL BE OF HIGH INTENSITY REFLECTIVE SHEETING.

7. PAVEMENT STRIPING SHALL BE DONE BY THE CONTRACTOR, AND SHALL BE REPLACED IN KIND.

8. THE CONTRACTOR SHALL REFERENCE TO THE SATISFACTION OF THE ENGINEER, ALL EXISTING TRAFFIC SIGNS, POSTS AND PAVEMENT MARKINGS PRIOR TO THE COMMENCEMENT OF CONSTRUCTION. THE CONTRACTOR SHALL REPLACE OR REPAIR ALL TRAFFIC SIGNS, POSTS AND PAVEMENT MARKINGS DISTURBED BY HIS ACTIVITIES, AT NO ADDITIONAL COST TO THE STATE.

9. ALL LANES SHALL BE OPEN TO TRAFFIC DURING THE MORNING PEAK HOURS FROM 6:30 A.M. TO 8:30 A.M. AND DURING THE AFTERNOON PEAK HOURS FROM 3:30 P.M. TO 5:30 P.M., AND DURING OFF-WORK HOURS. FREE FLOW OF TRAFFIC SHALL BE MAINTAINED AT ALL OTHER TIMES, EXCEPT WHEN OTHERWISE PERMITTED BY A TRAFFIC CONTROL PLAN APPROVED BY THE ENGINEER.

10. CONTRACTOR SHALL INFORM THE STATE PERMIT OFFICE, (808) 933-8866, AT LEAST TWO (2) DAYS PRIOR TO CLOSING OF ANY LANES.

11. TEMPORARY ROAD CLOSURES REQUIRE ADVANCE APPROVAL IN WRITING FROM THE ENGINEER AND A NOTICE TO MOTORISTS MAY BE REQUIRED. SUBMIT THE NOTICE TO THE ENGINEER FOR REVIEW AND ACCEPTANCE A MINIMUM OF 4 WEEKS PRIOR TO PUBLICATION.

12. UNPROTECTED PAVEMENT DROPOFFS GREATER THAN 2" WITHIN 8 FEET OF THE TRAVEL WAY SHALL NOT BE ALLOWED DURING NON-WORKING HOURS, EXCEPT AS APPROVED BY THE ENGINEER IN WRITING.

13. CLEAR SHOULDER AREAS SHALL BE MAINTAINED FOR BICYCLISTS AND PEDESTRIAN TRAFFIC AT ALL TIMES. IF ONE SHOULDER IS TO BE CLOSED, APPROPRIATE SIGNS SHALL BE POSTED DIRECTING BICYCLISTS AND PEDESTRIANS TO USE ALTERNATE SHOULDER AREA.

14. NO MATERIAL AND/OR EQUIPMENT SHALL BE STOCKPILED OR OTHERWISE STORED WITHIN HIGHWAY RIGHT-OF-WAY, EXCEPT AT LOCATIONS DESIGNATED IN WRITING AND APPROVED BY THE ENGINEER.

15. THE MINIMUM PAVEMENT STRUCTURE SHALL CONSIST OF:

A. RESIDENTIAL DRIVEWAYS:

1) 2" HOT MIX ASPHALT (HMA) PAVEMENT ON 6" AGGREGATE BASE COURSE OR 2" HMA PAVEMENT ON 2-1/2" GLASSPHALT BASE (HMGB) COURSE OR HOT MIX ASPHALT BASE (HMAB) COURSE.

2) 4" OF CLASS "A" CONCRETE REINFORCED WITH 6" X 6"-W2.9XW2.9 WIRE MESH ON 12" AGGREGATE SUBBASE IF DEEMED NECESSARY BY THE ENGINEER.

B. COMMERCIAL DRIVEWAYS, SIDE ROADS AND UTILITY INSTALLATIONS ON MINOR HIGHWAYS:

1) 2-1/2" HMA PAVEMENT, 8" AGGREGATE BASE COURSE ON 12" AGGREGATE SUBBASE, OR 2-1/2" HMA PAVEMENT ON 8" HMGB COURSE OR HMAB COURSE.

NOTES FOR CONSTRUCTION WITHIN STATE RIGHT-OF-WAY (CONT.)

2) 6" OF CLASS "A" CONCRETE REINFORCED WITH 6" X 6"-W2.9XW2.9 WIRE MESH ON 12" AGGREGATE SUBBASE IF DEEMED NECESSARY BY ENGINEER.

C. CHANNELIZED INTERSECTIONS AND UTILITY INSTALLATIONS ON MAJOR HIGHWAYS:

1) 4" HMA PAVEMENT, 8" AGGREGATE BASE COURSE ON 12" AGGREGATE SUBBASE, OR 4" HMA PAVEMENT ON 8" HMGB COURSE OR HMAB COURSE, OR MATCH EXISTING PAVEMENT STRUCTURE, WHICH EVER IS GREATER.

16. COMPACTION TESTS SHALL BE TAKEN IN ACCORDANCE WITH THE CURRENT "SPECIFICATIONS FOR INSTALLATION OF MISCELLANEOUS IMPROVEMENTS WITHIN STATE HIGHWAYS", AS FOLLOWS:

A. SUBBASE: 1 COMPACTION TEST(S) PER LIFT EACH 300 LIN. FT. OF ROADWAY.

B. BASE COURSE: 1 COMPACTION TEST(S) PER LIFT EACH 200 LIN. FT. OF ROADWAY.

C. 1 COMPACTION TEST(S) PER LIFT FOR EACH 200 LINEAL FEET OF TRENCH.

D. A COPY OF THE TEST RESULTS SHALL BE SUBMITTED TO ENGINEER FOR ACCEPTANCE.

17. NO OPEN TRENCH SHALL BE PERMITTED WITHIN THE CLEAR ZONE, DEFINED BY THE CURRENT EDITION OF THE AASHTO ROADSIDE DESIGN GUIDE, EXCEPT WHERE SPECIFIED IN THE APPROVED TRAFFIC CONTROL PLAN, OR AS APPROVED BY THE ENGINEER IN WRITING.

18. NO TRENCH SHALL BE OPENED MORE THAN 500 FEET IN ADVANCE OF THE INSTALLED AND TESTED PIPE AND/OR DUCTLINE.

19. PRIOR TO COMMENCING TRENCH EXCAVATION WORK, THE CONTRACTOR SHALL TAKE A SURFACE PROFILE ALONG THE CENTERLINE OF THE PROPOSED UTILITY TRENCH. THIS INFORMATION SHALL BE USED IN VERIFYING THAT THE ROADWAY HAS BEEN RESTORED TO ITS ORIGINAL CONDITION. A COPY OF THE TRENCH PROFILE SHALL BE SUBMITTED TO THE ENGINEER.

20. THE CONTRACTOR SHALL BE REQUIRED TO PROVIDE ADEQUATE, SAFE, NON-SKID BRIDGING MATERIAL OVER THE TRENCH, INCLUDING SHORING, WHEN TRENCHING IN PAVEMENT AREAS TO HANDLE ALL TYPES OF VEHICULAR TRAFFIC. SMOOTH RIDING TAPERS SHALL BE PROVIDED FOR PAVEMENT TRANSITIONS AND ADVANCED WARNING SIGNS SHALL BE POSTED. PRIOR TO INSTALLING SUCH BRIDGING MATERIAL, THE CONTRACTOR SHALL SUBMIT TO THE ENGINEER FOR ACCEPTANCE, DRAWINGS STAMPED BY A LICENSED STRUCTURAL ENGINEER.

21. LONGITUDINAL DRAINAGE ALONG THE HIGHWAY SHALL BE MAINTAINED AT ALL TIMES.

22. EXISTING HIGHWAY DRAINAGE SYSTEMS SHALL REMAIN FUNCTIONAL AT ALL TIMES.

23. THE CONTRACTOR SHALL SCHEDULE HIS WORK AROUND THE IRONMAN TRIATHLON RACE ACTIVITIES, HELD ANNUALLY IN OCTOBER AND ANY OTHER PERMITTED RACE. ALL PAVEMENT AND SHOULDER AREAS SHALL BE RESTORED TO SMOOTH RIDING CONDITION, COMPLETELY CLEANED WITH PAVEMENT STRIPING INSTALLED, THREE WEEKS PRIOR TO THE EVENT. NO CONSTRUCTION WORK WITHIN THE STATE RIGHT-OF-WAY SHALL BE PERMITTED DURING THIS PERIOD THAT INTERFERES WITH THE PREPARATION AND RUNNING OF THE RACE. PRIOR TO BEGINNING CONSTRUCTION, THE CONTRACTOR SHALL CHECK WITH THE HAWAI'I DISTRICT PERMIT OFFICE AT (808) 933-8866 AND THE POLICE DEPARTMENT, TRAFFIC SERVICES BRANCH, AT (808) 961-2227, FOR ANY PERMITTED RACE.

24. THE CONTRACTOR SHALL REPAIR ALL DAMAGE CAUSED BY THE CONTRACTOR'S OPERATIONS. ANY SUCH, REPAIR WORK SHALL BE DONE BY THE CONTRACTOR AT NO ADDITIONAL COST TO THE STATE. DAMAGES TO ANY EXISTING FACILITIES SHALL BE IMMEDIATELY REPORTED TO THE RESPECTIVE UTILITY COMPANIES, CITY OR STATE AGENCY.

25. CONTRACTOR SHALL PROVIDE STATE HIGHWAYS DIVISION, HAWAI'I DISTRICT OFFICE, WITH "AS-BUILT" DRAWINGS UPON COMPLETION OF THE WORK. THIS SHALL BE DONE PRIOR TO THE DEPARTMENT'S RELEASE OF THE PERMIT BOND.

GRADING NOTES

1. ALL GRADING WORK SHALL CONFORM TO CHAPTER 10 OF THE HAWAII COUNTY CODE. SHOULD A GRADING PERMIT BE REQUIRED, NO WORK SHALL COMMENCE UNTIL THE DEPARTMENT OF PUBLIC WORKS (DPW) APPROVES A GRADING PERMIT.

2. THE CONTRACTOR SHALL REMOVE ALL SILT AND DEBRIS DEPOSITED IN DRAINAGE FACILITIES, ROADWAYS AND OTHER AREAS RESULTING FROM HIS WORK. THE COSTS INCURRED FOR ANY NECESSARY REMEDIAL ACTION BY THE DPW SHALL BE PAYABLE BY THE CONTRACTOR.

3. THE CONTRACTOR, AT HIS OWN EXPENSE, SHALL KEEP THE PROJECT AND SURROUNDING AREAS FREE FROM DUST NUISANCES. THE WORK SHALL BE IN CONFORMANCE WITH THE AIR POLLUTION CONTROL RULES OF THE STATE DEPARTMENT OF HEALTH, HAR 11-60.1, FUGITIVE DUST.

4. ALL GRADING OPERATIONS SHALL BE PERFORMED IN CONFORMANCE WITH THE APPLICABLE PROVISIONS OF THE HAWAII ADMINISTRATIVE RULES, TITLE 11, CHAPTER 55, WATER POLLUTION CONTROL AND CHAPTER 54, WATER QUALITY STANDARDS, AND TO THE EROSION AND SEDIMENTATION CONTROL STANDARDS AND GUIDELINES OF THE DEPARTMENT OF PUBLIC WORKS, COUNTY OF HAWAII.

5. THE CONTRACTOR SHALL SOD OR PLANT ALL SLOPES AND EXPOSED AREAS IMMEDIATELY AFTER GRADING WORK HAS BEEN COMPLETED.

6. FILLS ON SLOPES SHALL BE IN ACCORDANCE TO THE RECOMMENDATIONS WITH THE "DRAFT PRELIMINARY GEOTECHNICAL EXPLORATION REPORT, DHHL, LALAMILO RS10 SUBDIVISION PROJECT, LALAMILO, WAIMEA, BIG ISLAND OF HAWAII", PREPARED BY PSC CONSULTANTS, LLC, DATED JULY 28, 2006.

7. THE CONTRACTOR SHALL INFORM THE DPW OF THE LOCATION OF THE DISPOSAL AND/OR BORROW SITE(S) REQUIRED FOR THIS PROJECT WHEN AN APPLICATION FOR A GRADING PERMIT IS MADE. THE DISPOSAL AND/OR BORROW SITE(S) MUST ALSO FULFILL THE REQUIREMENTS OF THE GRADING ORDINANCE.

8. NO GRADING WORK SHALL BE DONE ON SATURDAYS, SUNDAYS AND HOLIDAYS ANYTIME WITHOUT PRIOR APPROVAL FROM THE DEPARTMENT OF PUBLIC WORKS. GRADING WORK ON NORMAL WORKING DAYS SHALL BE BETWEEN THE HOURS OF 7:00 A.M. TO 3:30 P.M.

9. FILLS SHALL BE COMPACTED TO 90 PERCENT (90%) OF THE MINIMUM DENSITY PER ASTM D-1557 TEST.

10. THE CONTRACTOR SHALL REMOVE ALL VEGETATION BEFORE PLACING FILLS ON NATURAL GROUND SURFACE.

I CONFIRM THAT WE HAVE OBTAINED AND HAVE A COPY OF THE STATE DEPARTMENT OF TRANSPORTATION HIGHWAYS DIVISION, "STORM WATER PERMANENT BEST MANAGEMENT PRACTICES MANUAL".

RICHARD Y. SANTO, P.E. DATE

WATER NOTES

1. ALL WORK SHALL BE DONE ACCORDING TO THE WATER SYSTEM STANDARDS, STATE OF HAWAII, DATED 2002, AS AMENDED.

2. ALL EXISTING WATERLINES, WATERLINE APPURTENANCES AND OTHER UTILITY LOCATIONS SHOWN ON THE PLANS ARE OBTAINED FROM THE LATEST RELIABLE SORCES. THE CONTRACTOR SHALL BE RESPONSIBLE TO VERIFY THE EXACT LOCATION OF ALL UTILITIES IN THE FIELD AND SHALL BEAR ALL COSTS FOR DAMAGES DONE DURING THE CONTRACT PERIOD.

3. THE CONTRACTOR SHALL INFORM THE D.W.S. ENGINEER 72 HOURS PRIOR TO THE BEGINNING OF ANY WATERLINE WORK AND TWO WEEKS PRIOR TO ANY CONNECTION, CHLORINATION, SHUT-OFF OR RELOCATION WORK.

4. ALL CONNECTIONS TO THE EXISTING WATER SYSTEM SHALL BE DONE BY THE D.W.S. THE CONTRACTOR SHALL PERFORM ALL EXCAVATION, BACKFILL, ROAD REPAIR, TRAFFIC CONTROL, AND PROVIDE EQUIPMENT AND MATERIALS NECESSARY TO COMPLETE THE CONNECTION.

5. THE CONTRACTOR SHALL PAY FOR ALL WORK, EQUIPMENT AND MATERIAL FURNISHED BY THE D.W.S.

6. WHERE WATER SHUTOFF OF MORE THAN 3-HOURS BECOMES NECESSARY, THE CONTRACTOR, AT HIS EXPENSE, SHALL PROVIDE A TEMPORARY BYPASS LINE, SIZE OF WHICH SHALL BE DETERMINED BY THE D.W.S. ENGINEER. THE D.W.S. ENGINEER ALSO RESERVES THE RIGHT TO REQUIRE BYPASS LINES, REGARDLESS OF THE WATER SHUT-OFF PERIOD, IF DEEMED NECESSARY.

7. PROJECT REQUIRING TEMPORARY CONSTRUCTION WATER SERVICE SHALL BE METERED AND PAID FOR BY THE CONTRACTOR.

8. OUTSIDE OF STATE ROAD RIGHT-OF-WAYS: MINIMUM COVER ON THE WATER SYSTEM PIPELINES 4-INCH THROUGH 8-INCH TO BE 2.0 FEET. MINIMUM COVER ON 12-INCH PIPELINES TO BE 2.5 FEET. MINIMUM COVER ON PIPELINES GREATER THAN 12-INCH TO BE 3.0 FEET. MAXIMUM COVER ON PIPELINES NOT TO EXCEED 5 FEET UNLESS APPROVED BY THE MANAGER OF D.W.S. WITHIN STATE ROAD RIGHT-OF-WAYS: MINIMUM COVER ON ALL SIZES OF WATERLINES TO BE 3.0 FEET.

9. MINIMUM HORIZONTAL CLEARANCE BETWEEN WATERLINES AND OTHER UTILITIES SHALL BE 8-FEET (CLEAR SPACE – NOT CENTERLINE TO CENTERLINE) FOR ROAD RIGHT-OF-WAYS OF 50 FEET OR LESS, AND 10-FEET FOR ROAD RIGHT-OF-WAYS OF MORE THAN 50-FEET.

10. EXISTING WATERINES, VALVES, FITTINGS AND APPURTENANCES NOT DESIGNATED "REMOVE AND SLAVAGE" SHALL BE ABANDONED IN PLACE. ALL EXPOSED VALVE BOXES, VALVE, PIPES AND APPURTENANCES SHALL BE REMOVED AND DISPOSED OF PROPERLY AT NO COST TO THE D.W.S.

11. SERVICE LATERALS TO BE ABANDONED SHALL BE CUT AND PLUGGED AT THE WATTER MAIN. METER BOXES TO BE ABANDONED SHALL BE REMOVED AND GROUND SHALL BE RESTORED TO A CONDITION BETTER OR EQUAL TO SURROUNDING AREA.

12. WHEN COMPACTION TESTS ARE REQUIRED, THE CONTRACTOR SHALL BE RESPONSIBLE TO PROVIDE THE D.W.S. WITH PROCTOR RESULTS OF MATERIALS TO BE USED FOR THAT PORTION OF THE WORK REQUIRING COMPACTION. THESE RESULTS SHALL BE CERTIFIED AND SHALL BE FURNISHED TO D.W.S. ONE WEEK PRIOR TO COMMENCEMENT OF WORK. COST FOR COMPACTION SHALL BE INCIDENTAL TO PIPELINE INSTALLATION.

13. THE CONTRACTOR SHALL BE RESPONSIBLE TO MAINTAIN AND CERTIFY THE RECORD DRAWINGS (AS-BUILT DRAWINGS) AS TO ACCURACY AND AS-BUILT CONDITION, AND A LICENSED ENGINEER HIRED BY THE CONTRACTOR SHALL THEN STAMP THE CERTIFIED DRAWINGS. THE CONTRACTOR SHALL THEN SUBMIT THE RECORD DRAWINGS AND AS-BUILT TRACINGS TO THE D.W.S.

14. FOR PRIVATE WATER SYSTEMS: THE DEPARTMENT OF WATER SUPPLY (D.W.S.) IS PROVIDING ITS REVIEW AND INSPECTION FOR THE SUBJECT WATER SYSTEM IMPROVEMENTS ONLY. THIS REVIEW IS BASED ON THE INFORMATION AND CERTIFICATION PROVIDED TO D.W.S. BY THE DEVELOPER, LICENSED ARCHITECT OR ENGINEER, AND OWNER OF THE WATER COMPANY/UTILITY AND SUCCESSORS OR ASSIGNS, AND IS FOR GENERAL CONFORMANCE TO THE CURRENT WATER SYSTEM STANDARDS AND D.W.S. RULES AND RGULATIONS.

15. WATER SYSTEM APPROVED ON CONFORMANCE TO WATER SYSTEM STANDARDS ONLY. PLAN APPROVAL AND SIGNATURE BY THE MANAGER, DEPARTMENT OF WATER SUPPLY ONLY INDICATES THAT THE WATER SYSTEM IMPROVEMENTS SHOWN ON THE PLANS GENERALLY CONFORM TO WATER SYSTEM STANDARDS FOR THE COUNTY OF HAWAII. THEY ARE NOT GUARANTEES OF WATER AVAILABILITY OR A WATER COMMITMENT FOR THE SUBJECT PROJECT WHICH IS HANDLED SEPARATELY FROM PLAN REVIEW.

REVISION DATE	DESCRIPTION	MADE BY	APPROVED

cp&e Community Planning and Engineering, Inc.
Engineering Design | Construction Management | Infrastructure Planning
1100 Alakea Street, Sixth Floor Honolulu, Hawaii

LALAMILO HOUSING PHASE 2A
KAWAIHAE ROAD IMPROVEMENTS AT SOUTH KOHALA DISTRIBUTION ROAD
WAIMEA, SOUTH KOHALA, HAWAII
OWNER & DEVELOPER: DEPARTMENT OF HAWAIIAN HOME LANDS

GENERAL NOTES - 1

DRAWN BY: KWW	ENGINEER: KWW	CHECKED BY: RYS

RICHARD Y. SANTO
LICENSED PROFESSIONAL ENGINEER
No. 8955-C
HAWAII, U.S.A.

THIS WORK WAS PREPARED BY ME OR UNDER MY SUPERVISION. CONSTRUCTION OF THIS PROJECT WILL BE UNDER MY OBSERVATION. LICENSE EXPIRATION DATE: 04/30/12

DWG. NO. C-1

FILE	POCKET	FOLDER	NO.

WATER POLLUTION AND EROSION CONTROL NOTES

A. GENERAL:

1. THE CONTRACTOR IS REMINDED OF THE REQUIREMENTS OF SECTION 209 – WATER POLLUTION AND EROSION CONTROL, (HAWAII STANDARD SPECIFICATIONS FOR ROAD AND BRIDGE CONSTRUCTION, 2005). SECTION 209 DESCRIBES BUT IS NOT LIMITED TO THE SUBMITTAL REQUIREMENTS; SCHEDULING OF WATER POLLUTION AND EROSION CONTROL CONFERENCE WITH THE ENGINEER; CONSTRUCTION REQUIREMENTS; METHOD OF MEASUREMENTS; AND BASIS OF PAYMENT.
2. THE CONTRACTOR SHALL FOLLOW THE GUIDELINES IN THE "BEST MANAGEMENT PRACTICES MANUAL FOR CONSTRUCTION SITES IN HONOLULU", DATED MAY 1999 OR AS AMENDED IN DEVELOPING, INSTALLING AND MAINTAINING THE BEST MANAGEMENT PRACTICES (BMP) FOR THE PROJECT.
3. THE ENGINEER MAY ASSESS LIQUIDATED DAMAGES OF UP TO $27,500 FOR NON-COMPLIANCE OF EACH BMP REQUIREMENT AND EACH REQUIREMENT STATED IN SECTION 209, FOR EVERY DAY OF NON-COMPLIANCE. THERE IS NO MAXIMUM LIMIT ON THE AMOUNT OF ASSESSED PER DAY.
4. THE ENGINEER WILL DEDUCT THE COST FROM THE PROGRESS PAYMENT FOR ALL CITATIONS RECEIVED BY THE DEPARTMENT FOR NONCOMPLIANCE, OR THE CONTRACTOR SHALL REIMBURSE THE STATE FOR THE FULL AMOUNT OF THE OUTSTANDING COST INCURRED BY THE COUNTY.
5. THE CONTRACTOR SHALL FOLLOW THE GUIDELINES IN THE HONOLULU'S CITY AND COUNTY "RULES FOR SOIL EROSION STANDARDS AND GUIDELINES" FOR ALL PROJECTS ON OAHU. USE APPLICABLE SOIL EROSION GUIDELINES FOR PROJECTS ON MAUI, MOLOKAI, KAUAI, AND HAWAII.
6. FOR PROJECTS THAT REQUIRE A NPDES PERMIT FROM THE DEPARTMENT OF HEALTH, INSTALL A RAIN GAGE PRIOR TO ANY FIELD WORK INCLUDING THE INSTALLATION OF ANY SITE-SPECIFIC BEST MANAGEMENT PRACTICE. THE RAIN GAGE SHALL HAVE A TOLERANCE OF AT LEAST 0.05 INCHES OF RAINFALL, AND HAVE AN OPENING OF AT LEAST ONE-INCH IN DIAMETER. INSTALL THE RAIN GAGE ON THE PROJECT SITE IN AN AREA THAT WILL NOT DETER RAINFALL FROM ENTERING THE GAGE OPENING. THE RAIN GAGE INSTALLATION SHALL BE STABLE AND PLUMBED. DO NOT BEGIN FIELD WORK UNTIL THE RAIN GAGE IS INSTALLED AND SITE-SPECIFIC BEST MANAGEMENT PRACTICES ARE IN-PLACE.
7. THE GRADING OPERATIONS SHALL BE PERFORMED IN CONFORMANCE WITH THE APPLICABLE PROVISIONS OF THE "WATER QUALITY AND WATER POLLUTION CONTROL STANDARDS" CONTAINED IN THE HAWAII ADMINISTRATIVE RULES, CHAPTER 11-54, "WATER QUALITY STANDARDS," CHAPTER 11-55, "WATER POLLUTION CONTROL", CHAPTER 10 OF THE "HAWAII COUNTY CODE, EROSION AND SEDIMENTATION CONTROL" AND IF APPLICABLE, THE NPDES PERMIT FOR THE PROJECT.
8. THE CONTRACTOR SHALL BE RESPONSIBLE FOR CONFORMANCE WITH THE APPLICABLE PROVISIONS OF CHAPTER 54, WATER QUALITY STANDARDS, AND CHAPTER 55, WATER POLLUTION CONTROL OF TITLE 11, ADMINISTRATIVE RULES OF THE STATE DEPARTMENT OF HEALTH.
9. THE CONTRACTOR AT HIS OWN EXPENSE SHALL KEEP THE PROJECT AREA AND SURROUNDING AREAS FREE FROM DUST NUISANCE. THE WORK SHALL BE IN CONFORMANCE WITH THE AIR AND WATER POLLUTION CONTROL STANDARDS AND REGULATIONS OF THE STATE DEPARTMENT OF HEALTH.

B. WASTE DISPOSAL:

1. WASTE MATERIALS

   ALL WASTE MATERIALS SHALL BE COLLECTED AND STORED IN A SECURELY LIDDED METAL DUMPSTER. THE DUMPSTER SHALL MEET ALL LOCAL AND STATE SOLID WASTE MANAGEMENT REGULATIONS. ALL TRASH AND CONSTRUCTION DEBRIS FROM THE SITE SHALL BE DEPOSITED IN THE DUMPSTER. THE DUMPSTER SHALL BE EMPTIED A MINIMUM OF TWICE PER WEEK OR AS IS DEEMED NECESSARY. NO CONSTRUCTION WASTE MATERIALS SHALL BE BURIED ON SITE. THE CONTRACTOR'S SUPERVISORY PERSONNEL SHALL BE INSTRUCTED REGARDING THE CORRECT PROCEDURE FOR WASTE DISPOSAL. NOTICES STATING THESE PRACTICES SHALL BE POSTED IN THE OFFICE TRAILER OR APPROPRIATE LOCATION TO INSURE COMPLIANCE, AND THE CONTRACTOR SHALL BE RESPONSIBLE FOR SEEING THAT THESE PROCEDURES ARE FOLLOWED.

2. HAZARDOUS WASTE

   ALL HAZARDOUS WASTE MATERIALS SHALL BE DISPOSED OF IN THE MANNER SPECIFIED BY LOCAL OR STATE REGULATIONS OR BY THE MANUFACTURER. THE CONTRACTOR'S PROJECT SITE PERSONNEL SHALL BE INSTRUCTED IN THESE PRACTICES AND SHALL BE RESPONSIBLE FOR SEEING THAT THESE PRACTICES ARE FOLLOWED.

3. SANITARY WASTE

   ALL SANITARY WASTE SHALL BE COLLECTED FROM THE PORTABLE TOILET UNITS A MINIMUM OF ONCE PER WEEK, OR AS REQUIRED.

C. EROSION AND SEDIMENT CONTROL INSPECTION AND MAINTENANCE PRACTICES:

1. ALL CONTROL MEASURES SHALL BE INSPECTED AT LEAST ONCE EACH WEEK, AND WITHIN 24 HOURS OF ANY RAINFALL EVENT OF 0.5 INCHES OR GREATER WITHIN A 24-HOUR PERIOD.
2. ALL MEASURES SHALL BE MAINTAINED IN GOOD WORKING ORDER. IF REPAIR IS NECESSARY, IT SHALL BE INITIATED WITHIN TWENTY FOUR (24) HOURS AFTER THE INSPECTION.
3. BUILT-UP SEDIMENT SHALL BE REMOVED FROM THE SILT FENCE WHEN IT HAS REACHED ONE-THIRD (1/3) THE HEIGHT OF THE SILT FENCE.
4. TEMPORARY AND PERMANENT SEEDING AND PLANTING SHALL BE INSPECTED FOR BARE SPOTS, WASHOUTS AND HEALTHY GROWTH.
5. A MAINTENANCE INSPECTION REPORT SHALL BE MADE PROMPTLY AFTER EACH INSPECTION BY THE CONTRACTOR AND A COPY SHALL BE SUBMITTED TO THE ENGINEER NO LATER THAN ONE WEEK FROM THE DATE OF THE INSPECTION.
6. SILT SCREEN OR FENCE SHALL BE INSPECTED FOR DEPTH OF SEDIMENT, TEARS, OR RIPS TO VERIFY THAT THE FABRIC IS SECURELY ATTACHED TO THE FENCE POSTS OR CONCRETE SLAB AND TO VERIFY THAT THE FENCE POSTS ARE FIRMLY IN THE GROUND. THE BOTTOM OF THE SILT SCREEN OR FENCE SHALL BE INSPECTED AND VERIFIED THAT IT IS BURIED A MINIMUM OF 6 INCHES BELOW THE EXISTING GROUND.
7. THE CONTRACTOR SHALL SUBMIT THE NAME OF A SPECIFIC INDIVIDUAL DESIGNATED RESPONSIBLE FOR INSPECTIONS, MAINTENANCE AND REPAIR ACTIVITIES AND FILLING OUT THE IINSPECTION MAINTENANCE REPORT.
8. THE CONTRACTOR SHALL CONTAIN, REMOVE, AND DISPOSE SLURRY GENERATED FROM SAW CUTTING OF PAVEMENT IN ACCORDANCE WITH APPROVED BMP PRACTICES. PAYMENT FOR CONFINEMENT, REMOVAL, AND DISPOSAL OF SLURRY SHALL BE CONSIDERED INCIDENTAL TO THE VARIOUS CONTRACT ITEMS.
9. PERSONNEL SELECTED FOR THE INSPECTION AND MAINTENANCE RESPONSIBILITIES SHALL RECEIVE TRAINING FROM THE CONTRACTOR. THEY SHALL BE TRAINED IN ALL INSPECTION AND MAINTENANCE PRACTICES NECESSARY FOR KEEPING THE EROSION AND SEDIMENT CONTROLS USED ONSITE IN GOOD WORKING ORDER.

D. GOOD HOUSEKEEPING, BEST MANAGEMENT PRACTICES:

1. MATERIALS POLLUTION PREVENTION PLAN
   - A. APPLICABLE MATERIALS OR SUBSTANCES LISTED BELOW ARE ANTICIPATED TO BE PRESENT ONSITE DURING CONSTRUCTION. OTHER MATERIALS AND SUBSTANCES NOT LISTED BELOW SHALL BE ADDED TO THE INVENTORY AS APPLICABLE: CONCRETE, PETROLEUM BASED PRODUCTS AND TAR.
   - B. MATERIAL MANAGEMENT PRACTICES SHALL BE USED TO REDUCE THE RISK OF SPILLS OR OTHER ACCIDENTAL EXPOSURE OF MATERIALS AND SUBSTANCES TO STORM WATER RUNOFF. AN EFFORT SHALL BE MADE TO STORE ONLY ENOUGH PRODUCT AS IS REQUIRED TO DO THE JOB.
   - C. ALL METRIALS STORED ONSITE SHALL BE STORED IN A NEAT, ORDERLY MANNER IN THEIR APPROPRIATE CONTAINERS AND IF POSSIBLE, UNDER A ROOF OR OTHER ENCLOSURE.
   - D. PRODUCTS SHALL BE KEPT IN THEIR ORIGINAL CONTAINERS WITH THE ORIGINAL MANUFACTURER'S LABEL ATTACHED.
   - E. SUBSTANCES SHALL NOT BE MIXED WITH ONE ANOTHER UNLESS RECOMMENDED BY THE MANUFACTURER.
   - F. WHENEVER POSSIBLE, A PRODUCT SHALL BE USED UP COMPLETELY BEFORE DISPOSING OF THE CONTAINER.
   - G. MANUFACTURER'S RECOMMENDATIONS FOR PROPER USE AND DISPOSAL SHALL BE FOLLOWED.
   - H. THE CONTRACTOR SHALL CONDUCT DAILY INSPECTIONS TO ENSURE PROPER USE AND DISPOSAL OF MATERIALS ON SITE.
2. HAZARDOUS MATERIAL POLLUTION PREVENTION PLAN
   - A. PRODUCTS SHALL BE KEPT IN ORIGINAL CONTAINERS UNLESS THEY ARE NOT RESEALABLE.
   - B. ORIGINAL LABELS AND MATERIALS, SAFETY, DATA SHEETS (MSDS) SHALL BE RETAINED.
   - C. SURPLUS PRODUCTS SHALL BE DISPOSED OF ACCORDING TO MANUFACTURER'S INSTRUCTIONS AND/OR LOCAL AND STATE RECOMMENDED METHODS.
3. ONSITE AND OFFSITE PRODUCT SPECIFIC PLAN
   - A. THE FOLLOWING PRODUCT SPECIFIC PRACTICES SHALL BE FOLLOWED ONSITE:

     1) PETROLEUM BASED PRODUCTS:

     ALL ONSITE VEHICLES, MACHINERY AND EQUIPMENT SHALL BE MONITORED FOR LEAKS AND RECEIVE REGULAR PREVENTIVE MAINTENANCE TO REDUCE THE CHANCE OF LEAKAGE. PETROLEUM PRODUCTS SHALL BE STORED IN TIGHTLY SEALED CONTAINERS WHICH ARE CLEARLY LABELED. ANY ASPHALT SUBSTANCES USED ON SITE SHALL BE APPLIED ACCORDING TO THE MANUFACTURER'S RECOMMENDATION. THE REFUELING AND SERVICING OF HEAVY EQUIPMENT SHOULD BE DONE IN A DESIGNATED AREA. CARE SHALL BE USED IN THE REFUELING PROCESS TO PREVENT OVERFLOW AND SPILLAGE.

     2) CONCRETE TRUCKS:

     CONCRETE TRUCKS SHALL BE ALLOWED TO WASH OUT OR DISCHARGE DRUM WASH WATER ONLY AT A DESIGNATED SITE. WATER SHALL NOT BE DISCHARGED IN THE HIGHWAY DRAINAGE SYSTEM OR WATERS OF THE UNITED STATES. THE CONTRACTOR SHALL CONTACT DRINKING WATER BRANCH, DEPARTMENT OF HEALTH AT (808) 586-4258 TO RECEIVE PERMISSION TO DESIGNATE A DISPOSAL SITE. THE CONTRACTOR SHALL CLEAN DISPOSAL SITE AS REQUIRED OR AS REQUESTED BY THE OWNER'S REPRESENTATIVE.
4. SPILL CONTROL PLAN
   - A. A SPILL PREVENTION PLAN SHALL BE POSTED TO INCLUDE MEASURES TO PREVENT AND CLEAN UP EACH SPILL.
   - B. THE CONTRACTOR SHALL BE THE SPILL PREVENTION AND CLEANUP COORDINATOR. THE CONTRACTOR SHALL DESIGNATE AT LEAST THREE SITE PERSONNEL WHO SHALL RECEIVE SPILL PREVENTION AND CLEANUP TRAINING. THESE INDIVIDUALS SHALL EACH BECOME RESPONSIBLE FOR A PARTICULAR PHASE OF PREVENTION AND CLEANUP. THE NAMES OF RESPONSIBLE SPILL PERSONNEL SHALL BE POSTED IN THE MATERIAL STORAGE AREA AND IN THE OFFICE TRAILER ONSITE.
   - C. MANUFACTURERS' RECOMMENDED METHODS FOR SPILL CLEANUP SHALL BE CLEARLY POSTED AND SITE PERSONNEL SHALL BE MADE AWARE OF THE PROCEDURES AND THE LOCATION OF THE PROCEDURES AND THE LOCATION OF THE INFORMATION AND CLEANUP SUPPLIES.
   - D. MATERIALS AND EQUIPMENT NECESSARY FOR SPILL CLEANUP SHALL BE KEPT IN THE MATERIAL STORAGE AREA ONSITE.
   - E. ALL SPILLS SHALL BE CLEANED UP IMMEDIATLEY AFTER DISCOVERY.
   - F. THE SPILL AREA SHALL BE KEPT WELL VENTILATED AND PERSONNEL SHALL WEAR APPROPRIATE PROTECTIVE CLOTHING TO PREVENT INJURY FROM CONTACT WITH A HAZARDOUS SUBSTANCE.
   - G. SPILLS OF TOXIC HAZAROUS MATERIALS SHALL BE REPORTED TO THE APPROPRIATE STATE OR LOCAL GOVERNMENT AGENCY, REGARDLESS OF THE SIZE.

BMP NOTES

GENERAL:

1. THE BMPS SHALL BE APPLIED PRIOR TO THE COMMENCEMENT OF CONSTRUCTION WORK AND SHALL NOT BE REMOVED UNTIL CONSTRUCTION IS COMPLETE.
2. THE CONTRACTOR SHALL COORDINATE HIS STAGING AREA WITH THE COUNTY AND ALL INTERESTED AND REGULATING PARTIES. THE CONTRACTOR SHALL PROVIDE A CONSTRUCTION INGRESS/EGRESS TO HIS STAGING AREA CONSISTING OF AN 8"-THICK CRUSHED ROCK LAYER AND OF DIMENSIONS ADEQUATE TO CONTROL EROSION AND EARTH DISPLACEMENT NUISANCE AT ADJOINING AREAS. THE CONTRACTOR SHALL INSTALL PROPER SECONDARY CONTAINMENT STRUCTURES, SUCH AS, GRAVEL BERMS AND SILT FENCES AROUND THE DESIGNATED AREA TO PREVENT STORMWATER CARRYING CONTAMINANTS INTO STREAMS. THE RAINWATER ACCUMULATED WITHIN THE DESIGNATED AREA SHALL BE NATURALLY EVAPORATED OR INFILTRATED INTO THE GROUND.
3. MEASURES TO CONTROL EROSION AND OTHER POLLUTANTS SHALL BE IN PLACE BEFORE ANY WORK IS INITIATED.
4. TEMPORARY BMPS SHALL BE MONITORED PERIODICALLY AND AFTER EVERY SIGNIFICANT RAINFALL FOR STRUCTURAL INTEGRITY AND SEDIMENT BUILD-UP. DAMAGED OR IMPROPERLY FUNCTIONING BMPS SHALL BE REPAIRED OR REPLACED (PAID FOR BY THE CONTRACTOR) AND SEDIMENT/DEBRIS ACCUMULATION SHALL BE REMOVED. FLUSHING THE STREAM IS PROHIBITED.
5. IF ANY WASH DOWN OF CONSTRUCTION EQUIPMENT OR VEHICLES IS NECESSARY AT THE SITE, THE WASH WATER WILL BE TREATED BEFORE DISCHARGE OR WILL NOT BE ALLOWED TO FLOW OFF-SITE.
6. DUST GENERATION SHALL BE CONTROLLED SO AS TO PREVENT NUISANCE TO NEARBY PROPERTIES.
7. EXCAVATED, DEMOLISHED, CLEARED & GRUBBED MATERIAL NOT SUITABLE FOR REUSE SHALL BE HAULED OFF SITE FOR DISPOSAL.
8. THE CONTRACTOR SHALL CLEAN THE PROJECT SITE OF DEBRIS AT THE END OF EACH WORKDAY.
9. AT THE CONCLUSION OF ALL PROJECT WORK, ALL BEST MANAGEMENT PRACTICES SHALL BE REMOVED AND THE AREA SHALL BE RESTORED TO ITS ORIGINAL CONDITION, OR BETTER, UPON ACCEPTANCE OF THE PROJECT BY THE COUNTY.

ROAD & UTILITY REHABILITATION POLLUTION CONTROL:

1. EXPOSED TRENCHED AREAS SHALL BE PROTECTED FROM RUNOFF AND WIND EROSION WITH STEEL PLATE COVERS UNTIL REPAVING CAN BE ACCOMPLISHED. EXPOSED AREAS SHALL BE SODDED OR PLANTED AS SOON AS BACKFILL HAS BEEN ESTABLISHED. PLANTING SHALL NOT BE DELAYED UNTIL ALL BACKFILLING HAS BEEN COMPLETED. BACKFILLING SHALL BE CONTINUOUS AND ANY AREA WITHIN WHICH WORK HAS BEEN INTERRUPTED OR DELAYED SHALL BE PLANTED.
2. A HOE RAM, OR SIMILAR EQUIPMENT, SHALL BE USED TO BREAK DEMOLISHED MATERIAL INTO PARTICLES AS LARGE AS PRACTICAL FOR LOADING INTO THE WASTE TRANSPORT TRUCK IN A MANNER NOT CAUSING EXCESSIVE DUST OR FINE DEBRIS. SMALLER DEBRIS SHALL BE REMOVED BY HAND.

SOLID WASTE CONSTRUCTION NOTES

1. UNLESS OTHERWISE SPECIFIED, THE CONTRACTOR IS RESPONSIBLE FOR THE PROPER HANDLING, STORAGE AND/OR DISPOSAL OF ALL WASTE GENERATED BY THIS CONSTRUCTION, INCLUDING GRUBBING AND EXCESS EXCAVATED MATERIAL. ANY MATERIAL BROUGHT TO THE COUNTY LANDFILLS WILL BE SUBJECTED TO THE INSTITUTED TIPPING FEE SYSTEM, WITH NO EXCEPTIONS OR EXEMPTIONS.
2. ALL WASTES GENERATED BY CONSTRUCTION, INCLUDING GRUBBING, DEMOLITION AND EXCESS EXCAVATION MATERIAL MAY BE BROUGHT TO THE WEST HAWAII OR THE HILO LANDFILL. THE CONTRACTOR SHALL CHECK WITH THE SOLID WASTE DIVISION FOR DISCLOSURE OF THE CURRENT LANDFILL FEE AND CONSIDERATION OF THAT FEE SHALL BE INCLUDED IN THE CONTRACTOR'S BID SUM.
3. CONSTRUCTION, DEMOLITION AND GRUBBING MATERIAL SHALL NOT BE DEPOSITED AT AND OF THE COUNTY TRANSFER STATIONS, BUT SHALL BE TRANSPORTED FOR DISPOSAL TO EITHER THE WEST HAWAII OR HILO LANDFILL.
4. ASBESTOS MATERIAL MUST BE SEPARATED, DOUBLE BAGGED AND LANDFILLED IN ACCORDANCE WITH REGULATIONS OF THE SOLID WASTE DIVISION, DEPARTMENT OF PUBLIC WORKS. INFORMATION MAY BE OBTAINED BY CALLING THE DIVISION AT (808) 961-8339 BETWEEN 7:00 A.M. AND 4:00 P.M. MONDAY THROUGH FRIDAY.

ARCHAEOLOGICAL NOTE

IF DURING CONSTRUCTION, ANY PREVIOUSLY UNIDENTIFIED SITES OR REMAINS (SUCH AS ARTIFACTS, SHELL, BONE OR CHARCOAL DEPOSITS, HUMAN BURIALS, ROCK OR CORAL ALIGNMENTS, PAVING, OR WALLS) ARE ENCOUNTERED, THE APPLICANT SHALL STOP WORK AND CONTACT THE STATE DLNR HISTORIC SITES OFFICE AT (808) 548-7460 IMMEDIATELY. WORK IN THE IMMEDIATE AREA SHALL BE STOPPED UNTIL THE OFFICE IS ABLE TO ASSESS THE IMPACT AND MAKE FURTHER RECOMMENDATIONS FOR MITIGATIVE ACTIVITY.

COMPACTION TESTING

THE CONTRACTOR SHALL HIRE AN INDEPENDENT TESTING LAB TO CONDUCT COMPACTION TESTS. COMPACTION TESTS SHALL BE TAKEN IN ACCORDANCE WITH THE SPECIFICATIONS FOR INSTALLATION OF MISCELLANEOUS IMPROVEMENTS WITHIN STATE HIGHWAYS. COMPACTION TESTS SHALL BE TAKEN ACCORDING TO SECTION 207.1, SPECIAL INSTRUCTIONS OF FIELD COMPACTION TESTING, HDOT TECHNICAL MANUAL ON MATERIAL QUALITY CONTROL, AS FOLLOWS:

A. SUBBASE: ONE (1) COMPACTION TEST PER LIFT, PER 300 LINEAR FEET.
B. BASE COURSE: ONE (1) COMPACTION TEST PER LIFT, PER 200 LINEAR FEET.
C. ONE (1) COMPACTION TEST PER LIFT, PER 500 LINEAR FEET OF TRENCH.

GENERAL NOTES

1. THE CONTRACTOR SHALL VERIFY THE LOCATIONS OF ALL EXISTING VALVE BOXES, MANHOLE COVERS AND CENTERLINE MONUMENTS AND SHALL HAVE THEM RAISED TO MEET THE NEW PAVEMENT GRADE.
2. ALL CONSTRUCTION SHALL BE PERFORMED IN ACCORDANCE WITH STANDARD DETAILS AND STANDARD SPECIFICATIONS OF THE DEPARTMENT OF TRANSPORTATION, STATE OF HAWAII.
3. EXISTING PAVEMENT SHALL BE BROOMED OFF AND SHALL RECEIVE A TACK COAT OF 0.15 GALLON PER SQUARE YARD OF EMULSIFIED ASPHALT (SS-1) BEFORE PLACING A.C. PAVEMENT. THE COST OF THE TACK COAT SHALL BE INCIDENTAL TO THE A.C. PAVEMENT.
4. THE CONTRACTOR SHALL PROVIDE A SMOOTH-RIDING CONNECTION TO EXISTING STREETS AND DRIVEWAYS AND AT THE BEGINNING AND ENDING OF THE PROJECT LIMITS AS DIRECTED BY THE ENGINEER.
5. PAVEMENT STRIPING, INCLUDING CENTERLINE, CROSSWALK, STOP LINES, ETC.. AND RAISED PAVEMENT MARKERS SHALL CONFORM TO THE STATE STANDARDS FOR PAVEMENT MARKINGS AND STRIPING NOTES OR AS MODIFIED BY THE DETAILS ON THESE PLANS.
6. THE CONTRACTOR, AT HIS OWN EXPENSE, SHALL KEEP THE PROJECT AND SURROUNDING AREAS FREE FORM DUST NUISANCES. THE WORK SHALL BE IN CONFORMANCE WITH THE AIR POLLUTION CONTROL RULES OF THE STATE DEPARTMENT OF HEALTH, HAR 11-60.1, FUGITIVE DUST.
7. THE CONTRACTOR, AT HIS OWN EXPENSE, SHALL COORDINATE THE REFERENCING OF THE CENTERLINE MONUMENTS TO BE RECONSTRUCTED BY A SURVEYOR LICENSE TO PRACTICE IN THE STATE OF HAWAII. AFTER PAVING, THE SURVEYOR SHALL LOCATE THE MONUMENTS, AND AFTER RECONSTRUCTION OF THE MONUMENTS, THE SURVEYOR SHALL PUNCH THE CENTERLINE LOCATION ON THE BRASS PINS. THE SURVEYOR SHALL SUBMIT WRITTEN CERTIFICATION OF THE INSTALLATION AND LOCATION OF THE CENTERLINE MONUMENTS TO THE ENGINEER.
8. THE CONTRACTOR SHALL BE RESPONSIBLE FOR ANY DAMAGE DONE TO THE DWS EXISTING WATER SYSTEM.

NATIONAL POLLUTANT DISCHARGE ELIMINATION SYSTEM (NPDES) REQUIREMENTS FOR PERMIT PROJECTS WITHIN STATE HIGHWAY RIGHT-OF-WAY

1. THE CONTRACTOR SHALL OBTAIN AND COMPLY WITH THE NATIONAL POLLUTANT DISCHARGE ELIMINATION SYSTEM (NPDES) REQUIREMENTS FOR HAWAI'I DISTRICT PERMIT PROJECTS. THIS IS AVAILABLE AT THE HAWAI'I DISTRICT OFFICE AT 50 MAKAALA STREET, HILO, HAWAII (PH. 933-8866). DUE TO POTENTIAL COST IMPACTS, THE CONTRACTOR NEEDS TO BE AWARE OF THESE REQUIREMENTS.
2. ALL CONTRACTOR(S) INVOLVED WITH ANY ANY CONSTRUCTION PROJECT OR PERMIT PROJECTS WITHIN THE STATE HIGHWAYS RIGHT-OF-WAY SHALL FOLLOW THE GUIDELINES OF THE HIGHWAYS DIVISION'S "CONSTRUCTION BEST MANAGEMENT PRACTICES FIELD MANUAL" AND THE "RULES RELATING TO SOIL EROSION STANDARDS AND GUIDELINES" OF THE CITY AND COUNTY OF HONOLULU. COPIES OF THESE DOCUMENTS SHALL BE MAINTAINED ON SITE AT ALL TIMES. THE RESPECTIVE DOCUMENTS MAY BE DOWNLOADED FROM THE WEB SITES AT
   HTTP://WWW.STORMWATERHAWAII.COM/RESOURCES/ AND AT
   HTTP://WWW.USSPECBOOK.COM/FILES/SPECS/RULES-RELATING-TO- SOIL-EROSION.PDF.
3. THE CONTRACTOR SHALL COMPLETE AND SUBMIT A CONTRACTOR'S CERTIFICATION OF NPDES COMPLIANCE, INCLUDING COMPLETION OF THE BEST MANAGEMENT PRACTICE (BMP) CHECKLIST AND SUBMITTAL OF A WRITTEN BMP PLAN AND DRAWINGS, PRIOR TO ISSUANCE OF THE "PERMIT TO PERFORM WORK UPON STATE HIGHWAYS" OR "APPLICATION & PERMIT FOR THE OCCUPANCY AND USE OF STATE HIGHWAYS RIGHT-OF WAY".
4. THE CONTRACTOR SHALL OBTAIN A GENERAL NPDES PERMIT FROM THE DEPARTMENT OF HEALTH, FOR ANY PROJECT 1 ACRE OR GREATER IN AREA, PRIOR TO THE ISSUANCE OF THE PERMIT TO PERFORM WORK UPON STATE HIGHWAYS.

RICHARD Y. SANTO
LICENSED PROFESSIONAL ENGINEER
No. 8955-C
HAWAII, U.S.A.

THIS WORK WAS PREPARED BY ME OR UNDER MY SUPERVISION. CONSTRUCTION OF THIS PROJECT WILL BE UNDER MY OBSERVATION. LICENSE EXPIRATION DATE: 04/30/12

REVISION DATE	DESCRIPTION	MADE BY	APPROVED

cp&e Community Planning and Engineering, Inc.
Engineering Design | Construction Management | Infrastructure Planning
1100 Alakea Street, Sixth Floor Honolulu, Hawaii

LALAMILO HOUSING PHASE 2A
KAWAIHAE ROAD IMPROVEMENTS AT
SOUTH KOHALA DISTRIBUTION ROAD
WAIMEA, SOUTH KOHALA, HAWAII
OWNER & DEVELOPER: DEPARTMENT OF HAWAIIAN HOME LANDS

GENERAL NOTES - 2

DRAWN BY: KWW	ENGINEER: KWW	CHECKED BY: RYS

DWG. NO. C-2

SHEET 3 OF 15 SHEETS

FILE	POCKET	FOLDER	NO.

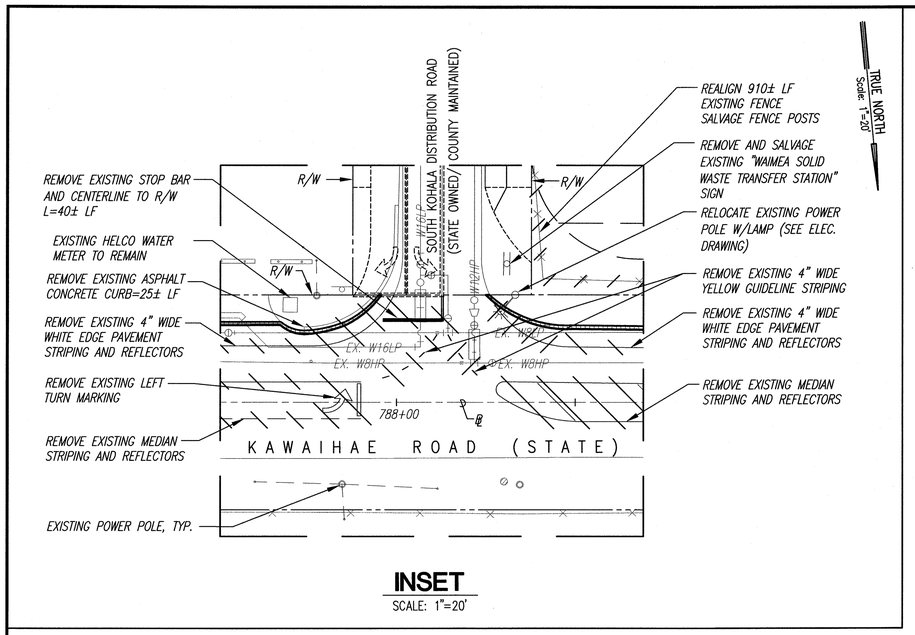

INSET

SCALE: 1"=20'

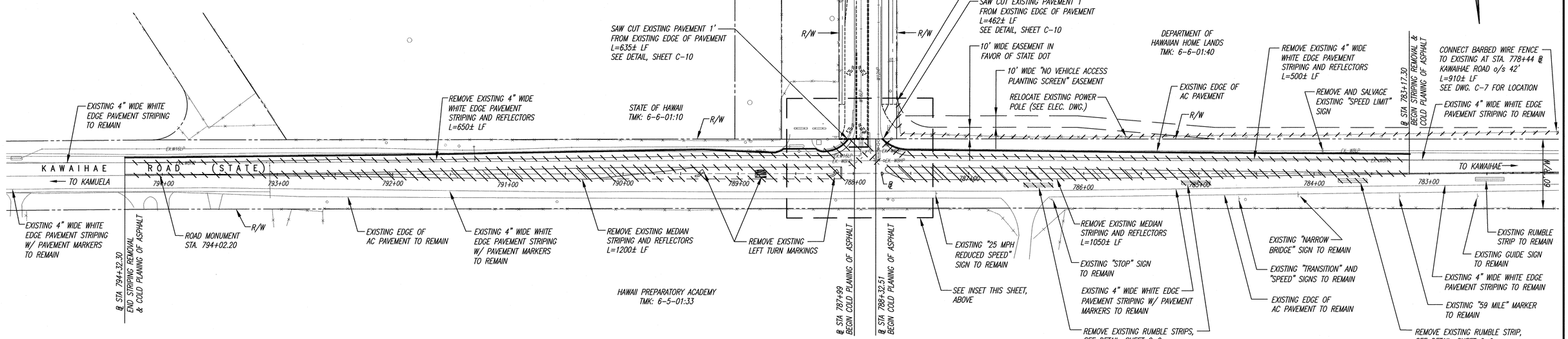

REMOVAL PLAN

SCALE: 1"=40'

LEGEND

- EDGE OF PAVEMENT (NOT IN CONTRACT, CURRENTLY IN CONSTRUCTION)
- STRIPING (NOT IN CONTRACT, CURRENTLY IN CONSTRUCTION)
- SAW CUT
- COLD PLANING LIMITS

40 20 0 40 80

Graphic Scale in Feet

RICHARD Y. SANTO
LICENSED PROFESSIONAL ENGINEER
No. 8955-C
HAWAII, U.S.A.

THIS WORK WAS PREPARED BY ME OR UNDER MY SUPERVISION. CONSTRUCTION OF THIS PROJECT WILL BE UNDER MY OBSERVATION. LICENSE EXPIRATION DATE: 04/30/12

REVISION DATE	DESCRIPTION	MADE BY	APPROVED

cp&e Community Planning and Engineering, Inc.
Engineering Design | Construction Management | Infrastructure Planning
1100 Alakea Street, Sixth Floor Honolulu, Hawaii

LALAMILO HOUSING PHASE 2A
KAWAIHAE ROAD IMPROVEMENTS AT SOUTH KOHALA DISTRIBUTION ROAD
WAIMEA, SOUTH KOHALA, HAWAII
OWNER & DEVELOPER: DEPARTMENT OF HAWAIIAN HOME LANDS

REMOVAL PLAN

DRAWN BY: KWW	ENGINEER: KWW	CHECKED BY: RYS

APPROVED:

DWG. NO. C-3 SHEET 4 OF 15 SHEETS

FILE	POCKET	FOLDER	NO.

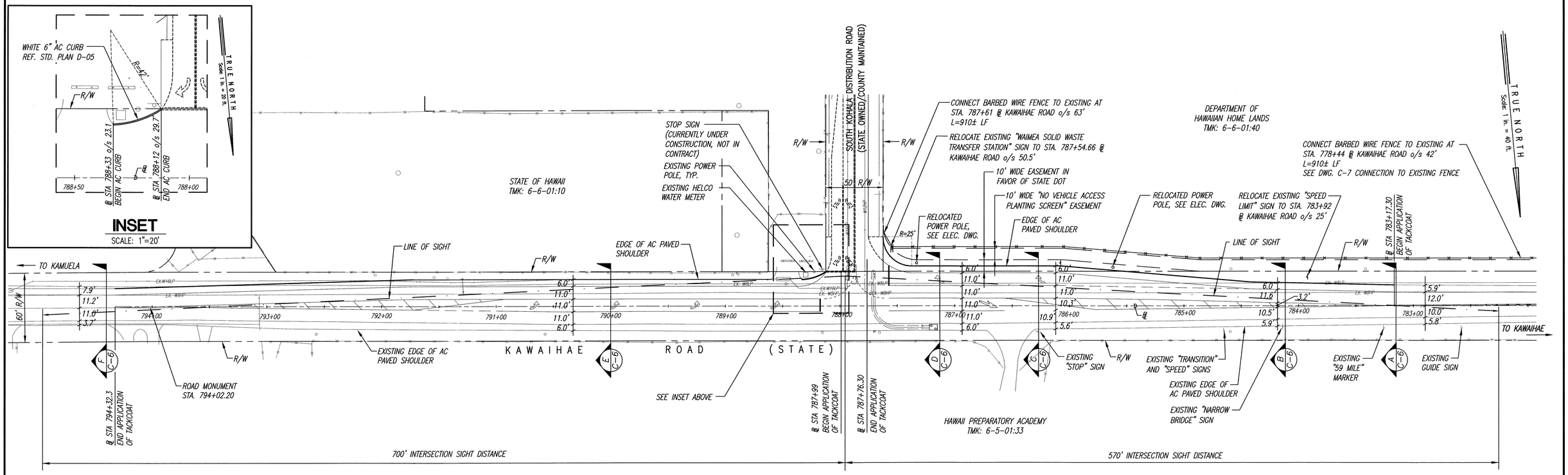

SITE LAYOUT PLAN

SCALE: 1"=40'

40 20 0 40 80

Graphic Scale in Feet

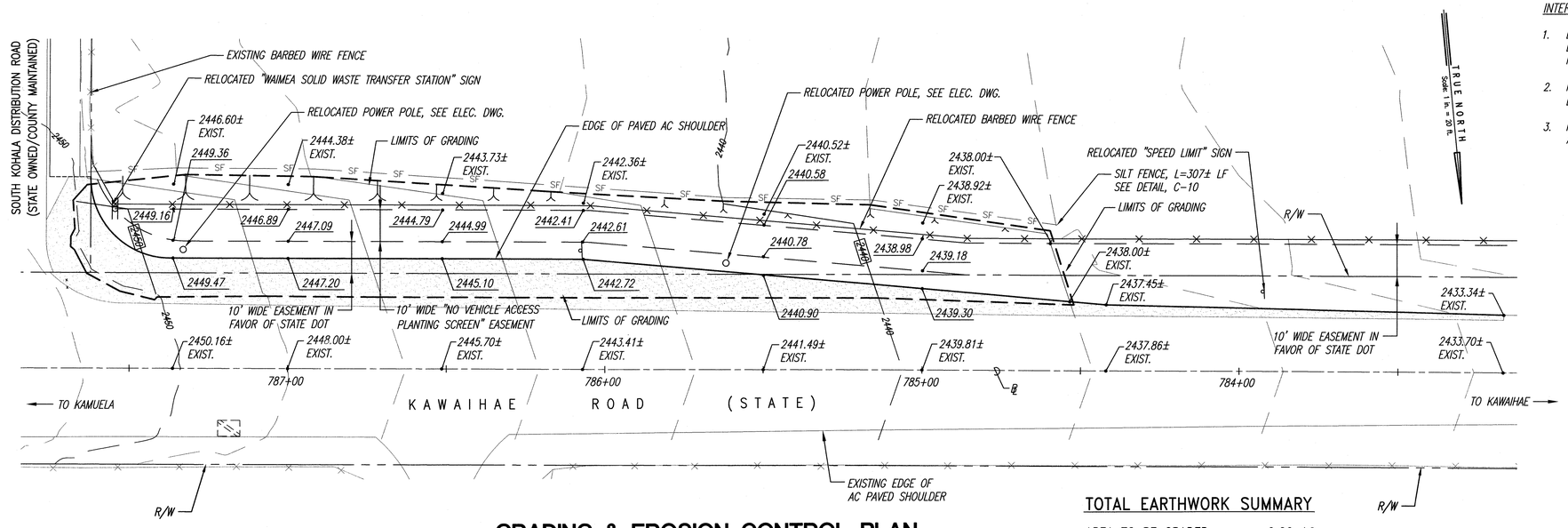

GRADING & EROSION CONTROL PLAN

SCALE: 1"=20'

20 10 0 20 40

Graphic Scale in Feet

TOTAL EARTHWORK SUMMARY

AREA TO BE GRADED	0.20 AC.
EXCAVATION	0 C.Y.
EMBANKMENT	385 C.Y.

INTERSECTION SIGHT DISTANCE (ISD) NOTES:

1. DESIGN VEHICLE: SINGLE-USE TRUCK
   DESIGN SPEED: 45 MPH
   POSTED SPEED: 35 MPH
2. INTERSECTION SIGHT DISTANCE (ISD)=(ADJUSTMENT FACTOR FOR SIGHT DISTANCE ON APPROACH GRADE) X 1.47 X DESIGN SPEED X TIME GAP.
3. REFERENCE: AASHTO, A POLICY ON GEOMETRIC DESIGN OF HIGHWAYS AND STREETS, 2004.

LEGEND

- EDGE OF PAVEMENT
- STRIPING (NOT IN CONTRACT, CURRENTLY IN CONSTRUCTION)
- STRIPING
- BACKFILL WITH EXCAVATED COLD PLANED MATERIAL
- LIMITS OF GRADING
- 2440 NEW CONTOUR
- 2440 EXISTING CONTOUR
- 2437.45 FINISH ELEVATION
- 2437.45± EXIST. EXISTING ELEVATION
- SF SILT FENCE

REVISION DATE	DESCRIPTION	MADE BY	APPROVED

cp&e Community Planning and Engineering, Inc.
Engineering Design | Construction Management | Infrastructure Planning
1100 Alakea Street, Sixth Floor Honolulu, Hawaii

LALAMILO HOUSING PHASE 2A
KAWAIHAE ROAD IMPROVEMENTS AT SOUTH KOHALA DISTRIBUTION ROAD
WAIMEA, SOUTH KOHALA, HAWAII
OWNER & DEVELOPER: DEPARTMENT OF HAWAIIAN HOME LANDS

SITE LAYOUT AND GRADING & EROSION CONTROL PLAN

DRAWN BY: KWW	ENGINEER: KWW	CHECKED BY: RYS

APPROVED:

RICHARD Y. SANTO
LICENSED PROFESSIONAL ENGINEER
No. 8955-C
HAWAII, U.S.A.

THIS WORK WAS PREPARED BY ME OR UNDER MY SUPERVISION. CONSTRUCTION OF THIS PROJECT WILL BE UNDER MY OBSERVATION. LICENSE EXPIRATION DATE: 04/30/12

DWG. NO. C-4 SHEET 5 OF 15 SHEETS

FILE	POCKET	FOLDER	NO.

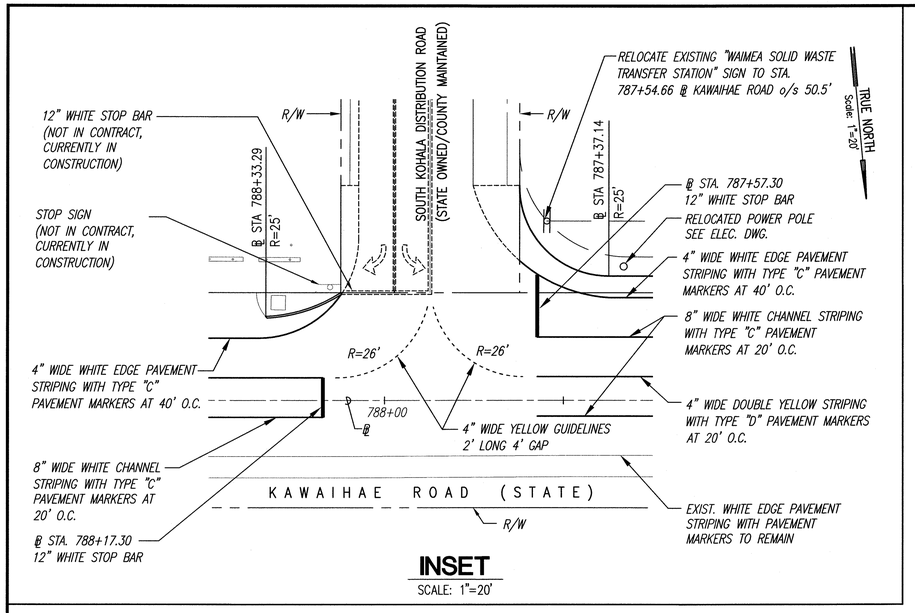

INSET

SCALE: 1"=20'

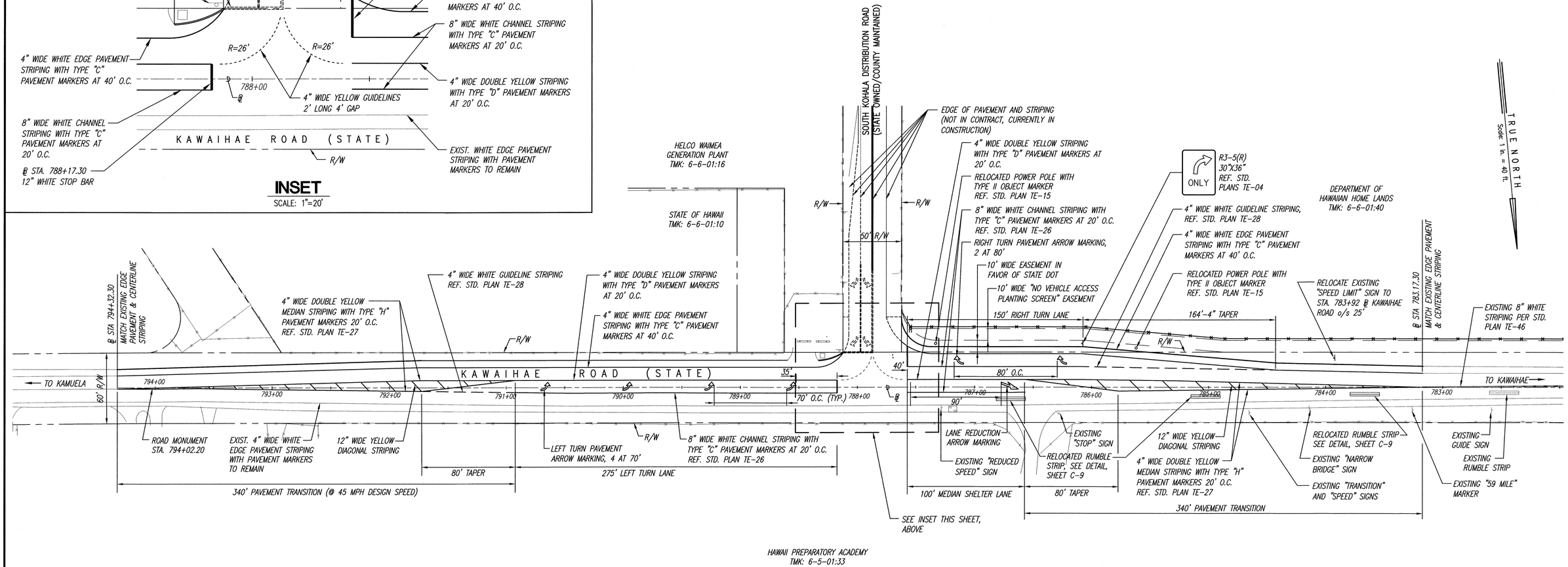

NOTE:
FOR TRAFFIC SIGNS AND PAVEMENT MARKINGS DETAILS, SEE SHEET C-9.

TRAFFIC SIGNS AND PAVEMENT MARKINGS PLAN

SCALE: 1"=40'

40 20 0 40 80
Graphic Scale in Feet

RICHARD Y. SANTO LICENSED PROFESSIONAL ENGINEER No. 8955-C HAWAII, U.S.A.

THIS WORK WAS PREPARED BY ME OR UNDER MY SUPERVISION. CONSTRUCTION OF THIS PROJECT WILL BE UNDER MY OBSERVATION. LICENSE EXPIRATION DATE: 04/30/12

REVISION DATE	DESCRIPTION	MADE BY	APPROVED

cp&e Community Planning and Engineering, Inc.
Engineering Design | Construction Management | Infrastructure Planning
1100 Alakea Street, Sixth Floor Honolulu, Hawaii

LALAMILO HOUSING PHASE 2A
KAWAIHAE ROAD IMPROVEMENTS AT SOUTH KOHALA DISTRIBUTION ROAD
WAIMEA, SOUTH KOHALA, HAWAII
OWNER & DEVELOPER: DEPARTMENT OF HAWAIIAN HOME LANDS

TRAFFIC SIGNS AND PAVEMENT MARKINGS PLAN

DRAWN BY: KWW	ENGINEER: KWW	CHECKED BY: RYS

APPROVED:

DWG. NO. C-5 SHEET 6 OF 15 SHEETS

FILE	POCKET	FOLDER	NO.

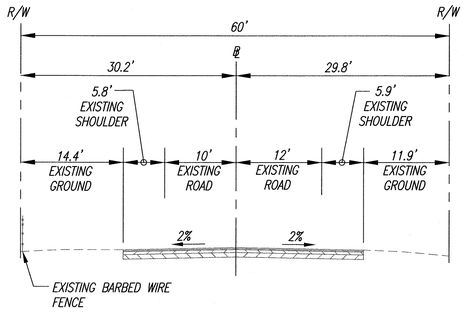

KAWAIHAE ROAD SECTION (℄ STA. 783+15)

SCALE: 1'=10"

A / C-4

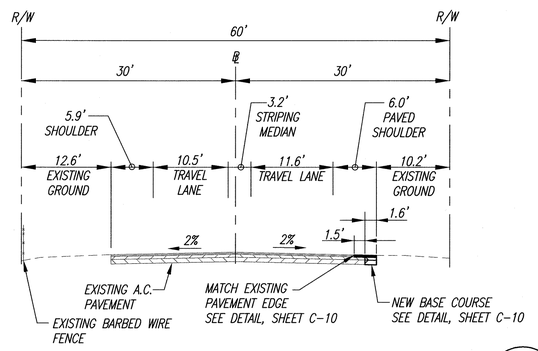

KAWAIHAE ROAD SECTION (℄ STA. 784+11.59)

SCALE: 1'=10"

B / C-4

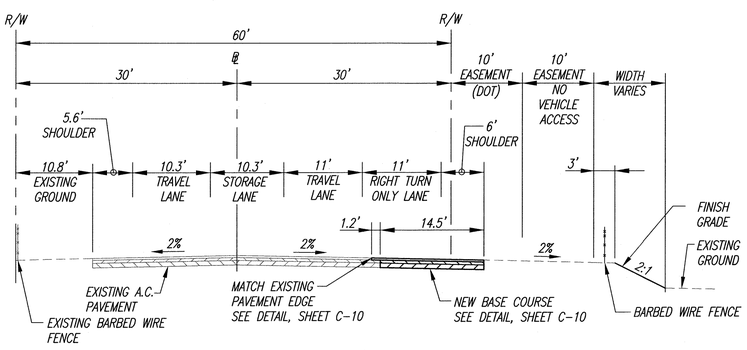

KAWAIHAE ROAD SECTION (℄ STA. 786+26.86)

SCALE: 1'=10"

C / C-4

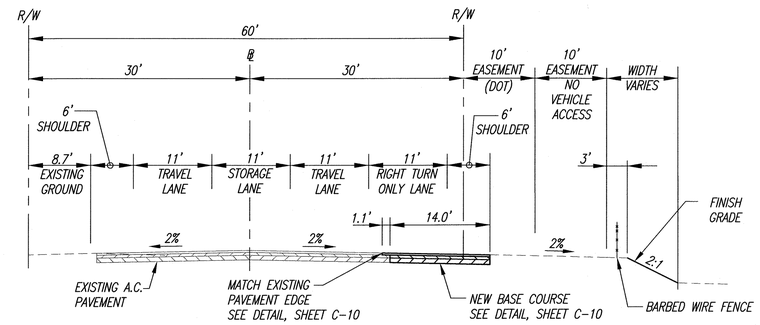

KAWAIHAE ROAD SECTION (℄ STA. 787+30)

SCALE: 1'=10"

D / C-4

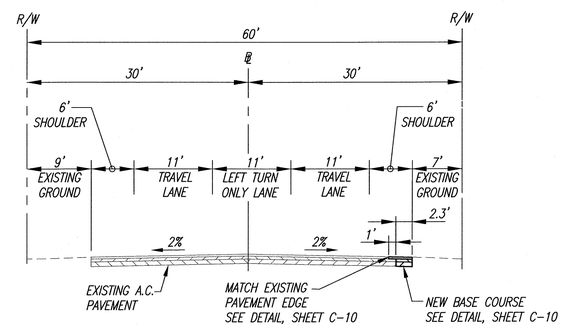

KAWAIHAE ROAD SECTION (℄ STA. 790+00)

SCALE: 1'=10"

E / C-4

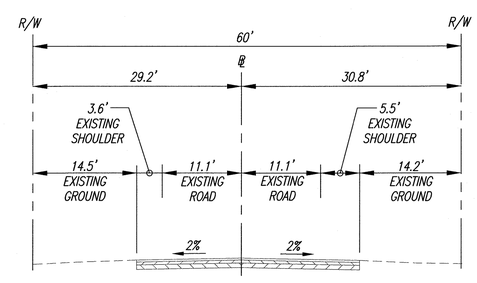

KAWAIHAE ROAD SECTION (℄ STA. 794+30)

SCALE: 1'=10"

F / C-4

RICHARD Y. SANTO
LICENSED PROFESSIONAL ENGINEER
No. 8955-C
HAWAII, U.S.A.

THIS WORK WAS PREPARED BY ME OR UNDER MY SUPERVISION. CONSTRUCTION OF THIS PROJECT WILL BE UNDER MY OBSERVATION. LICENSE EXPIRATION DATE: 04/30/12

REVISION DATE	DESCRIPTION	MADE BY	APPROVED

cp&e **Community Planning and Engineering, Inc.**
Engineering Design | Construction Management | Infrastructure Planning
1100 Alakea Street, Sixth Floor — Honolulu, Hawaii

LALAMILO HOUSING PHASE 2A
KAWAIHAE ROAD IMPROVEMENTS AT SOUTH KOHALA DISTRIBUTION ROAD
WAIMEA, SOUTH KOHALA, HAWAII
OWNER & DEVELOPER: DEPARTMENT OF HAWAIIAN HOME LANDS

TYPICAL ROADWAY SECTIONS

DRAWN BY: KWW | ENGINEER: KWW | CHECKED BY: RYS
APPROVED:

DWG. NO. **C-6** SHEET 7 OF 15 SHEETS

FILE	POCKET	FOLDER	NO.

LEGEND

- SIGN
- CONE OR DELINEATOR
- DIRECTION OF TRAFFIC
- WORK AREA
- POLICEMAN OR FLAGMAN

SIGN SCHEDULE

CW24-1A(L) 48"x48"	ROAD WORK 500 FT. CW20-1A(2D) 48"x48"	W20-7a(D) 48"x48"
CW24-1A(R) 48"x48"	ROAD WORK 750 FT. CW20-1A(3D) 48"x48"	XX M.P.H. CW13-1(XX)-A 24"x24"
ROAD WORK AHEAD CW20-1Ad 48"x48"	ROAD WORK 1000 FT. CW20-1A(4D) 48"x48"	END ROAD WORK CG20-2a 48"x24"

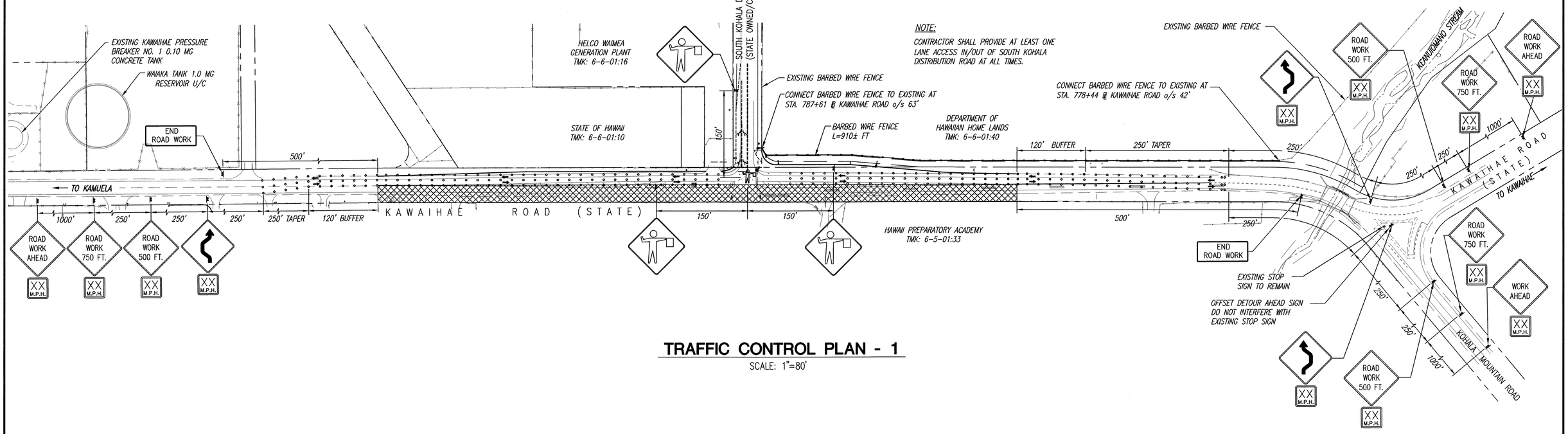

TRAFFIC CONTROL PLAN - 1

SCALE: 1"=80'

TABLE 1 FOR TRAFFIC CONTROL PLAN							
POSTED SPEED LIMIT (M.P.H.)	SIGN SPACING (D) (FEET)	TAPER LENGTH (T) (FEET)		LONGITUDINAL BUFFER SPACE (B) (FEET)	SPACING OF CONES OR DELINEATORS (FEET)		
		W = 12' OR LESS ①	W = GREATER THAN 12' ①		TAPER	TANGENT	WORK AREA
20	250	200	W x 17	35	20	20	10
25	250	200	W x 17	55	25	25	10
30	250	250	W x 20	85	30	30	10
→ * 35	250	250	W x 20	120	35	35	10
40	500	350	W x 30	170	40	40	10
45	500	550	W x 45	220	45	45	10
50	1000	600	W x 50	280	50	50	10
55	1000	700	W x 55	335	55	55	10

NOTES:

① W = WIDTH OF LANE, SHOULDER, OR OFFSET

→ * POSTED SPEED LIMIT

NOTES:

1. CW20-1Ad SIGN REQUIRED FOR POSTED SPEED LIMIT OF 45 M.P.H OR GREATER.
2. SEE TABLE 1 FOR ADDITIONAL DIMENSIONS.
3. ONE LANE ROAD (CW20-4) AND FLAGGER AHEAD (CW20-7) SIGNS SHALL BE REMOVED AND COVERED WHEN NO WORK IS BEING PERFORMED AND LANE IS NOT CLOSED.
4. THE ADVISORY SPEED (XX) SHALL BE DETERMINED BY THE ENGINEER.
5. SHOULDER TAPER: WHEN PAVED SHOULDERS HAVING A WIDTH OF 8-FT. OR MORE ARE CLOSED, CHANNELIZING DEVICES SHOULD BE USED TO CLOSE THE SHOULDER IN ADVANCE OF THE MERGING TAPER TO DIRECT VEHICULAR TRAFFIC TO REMAIN WITHIN THE TRAVELED WAY.
6. IF THE TANGENT DISTANCE ALONG THE TEMPORARY DIVERSION IS MORE THAN 600 FT. A REVERSE CURVE (CW1-4(L)) SIGN AND A REVERSE CURVE (CW1-4(R)) SIGN SHALL BE USED INSTEAD OF THE DOUBLE REVERSE CURVE (CW24-1A(L)) SIGN.
7. BUFFER ZONE REQUIREMENTS SHALL BE DETERMINED BY THE ENGINEER.

GENERAL NOTES FOR TRAFFIC CONTROL PLAN

1. THE PERMITTEE SHALL MAKE MINOR ADJUSTMENTS AT INTERSECTIONS, DRIVEWAYS, BRIDGES, STRUCTURES, ETC., TO FIT FIELD CONDITIONS.
2. CONES OR DELINEATORS SHALL BE EXTENDED TO A POINT WHERE THEY ARE VISIBLE TO APPROACHING TRAFFIC.
3. TRAFFIC CONTROL DEVICES SHALL BE INSTALLED SUCH THAT THE SIGN OR DEVICE FARTHEST FROM THE WORK AREA SHALL BE PLACED FIRST. THE OTHERS SHALL THEN BE PLACED PROGRESSIVELY TOWARD THE WORK AREA.
4. REGULATORY AND WARNING SIGNS WITHIN THE CONSTRUCTION ZONE THAT ARE IN CONFLICT WITH THE TRAFFIC CONTROL PLANS SHALL BE REMOVED OR COVERED. ALL SIGNS SHALL BE RESTORED UPON COMPLETION OF THE WORK.
5. FLAGGERS AND/OR POLICE OFFICERS SHALL BE IN SIGHT OF EACH OTHER OR IN DIRECT COMMUNICATION AT ALL TIMES.
6. WHEN REQUIRED BY THE ISSUING OFFICE, THE PERMITTEE SHALL INSTALL A FLASHING ARROW SIGNAL AS SHOWN ON THE TRAFFIC CONTROL PLANS.
7. SIGN SPACINGS (D), TAPER LENGTHS (T) AND SPACING OF CONES OR DELINEATORS SHALL BE AS SHOWN ON TABLE 1, UNLESS OTHERWISE NOTED ON THE TRAFFIC CONTROL PLANS.
8. ALL TRAFFIC LANES SHALL BE A MINIMUM OF 10 FEET WIDE.
9. ALL CONSTRUCTION WARNING SIGNS SHALL BE PROMPTLY REMOVED OR COVERED WHENEVER THE MESSAGE IS NOT APPLICABLE OR NOT IN USE.
10. THE BACKS OF ALL SIGNS USED FOR TRAFFIC CONTROL SHALL BE APPROPRIATELY COVERED TO PRECLUDE THE DISPLAY OF INAPPLICABLE SIGN MESSAGES (I.E., WHEN SIGNS HAVE MESSAGES ON BOTH FACES).
11. AT THE END OF EACH DAY'S WORK OR AS SOON AS THE WORK IS COMPLETED, THE PERMITTEE SHALL REMOVE ALL TRAFFIC CONTROL DEVICES NO LONGER NEEDED TO PERMIT FREE AND SAFE PASSAGE OF PUBLIC TRAFFIC. REMOVAL SHALL BE N THE REVERSE ORDER OF INSTALLATION.
12. PERMANENT PAVEMENT MARKINGS AND TRAFFIC SIGNS SHALL BE REPLACED UPON COMPLETION OF EACH PHASE OF WORK.

80 40 0 80 160
Graphic Scale in Feet

RICHARD Y. SANTO
LICENSED PROFESSIONAL ENGINEER
No. 8955-C
HAWAII, U.S.A.

THIS WORK WAS PREPARED BY ME OR UNDER MY SUPERVISION. CONSTRUCTION OF THIS PROJECT WILL BE UNDER MY OBSERVATION. LICENSE EXPIRATION DATE: 04/30/12

REVISION DATE	DESCRIPTION	MADE BY	APPROVED

cp&e Community Planning and Engineering, Inc.
Engineering Design | Construction Management | Infrastructure Planning
1100 Alakea Street, Sixth Floor Honolulu, Hawaii

LALAMILO HOUSING PHASE 2A
KAWAIHAE ROAD IMPROVEMENTS AT SOUTH KOHALA DISTRIBUTION ROAD
WAIMEA, SOUTH KOHALA, HAWAII
OWNER & DEVELOPER: DEPARTMENT OF HAWAIIAN HOME LANDS

TRAFFIC CONTROL PLAN - 1

DRAWN BY: KWW	ENGINEER: KWW	CHECKED BY: RYS

APPROVED:

DWG. NO. C-7 SHEET 8 OF 15 SHEETS

FILE	POCKET	FOLDER	NO.

LEGEND

- SIGN
- CONE OR DELINEATOR
- DIRECTION OF TRAFFIC
- WORK AREA
- POLICEMAN OR FLAGMAN

SIGN SCHEDULE

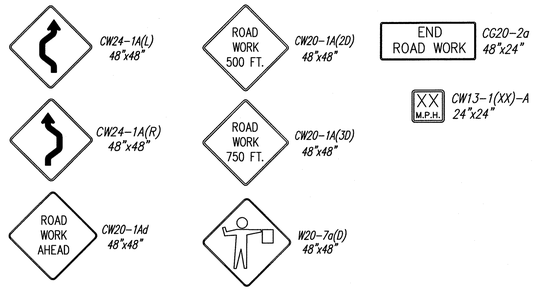

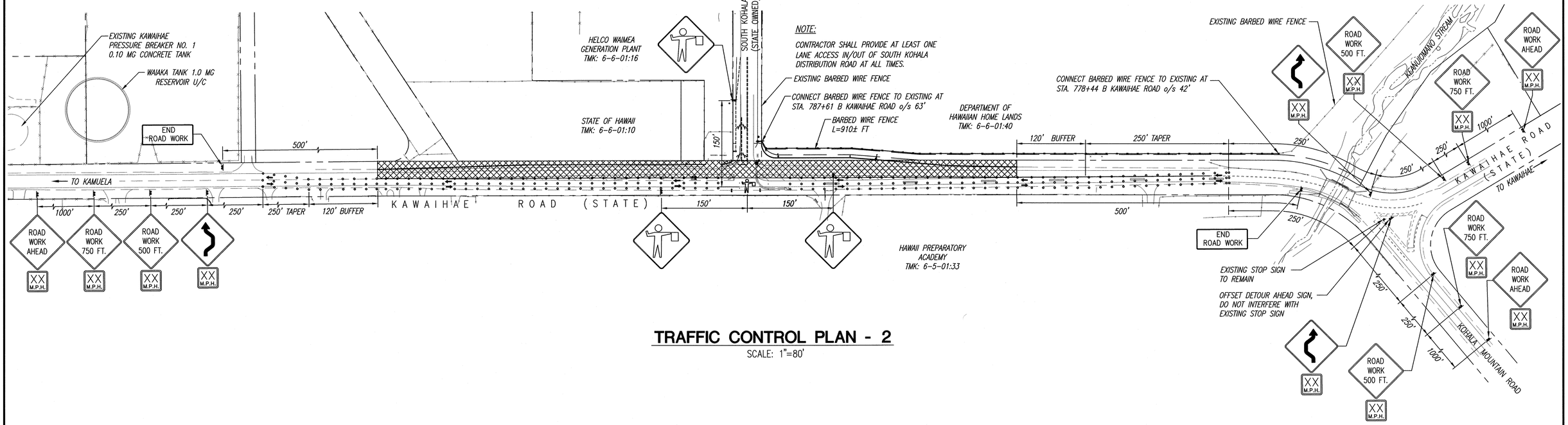

TRAFFIC CONTROL PLAN - 2

SCALE: 1"=80'

TABLE 1 FOR TRAFFIC CONTROL PLAN							
POSTED SPEED LIMIT (M.P.H.)	SIGN SPACING (D) (FEET)	TAPER LENGTH (T) (FEET)		LONGITUDINAL BUFFER SPACE (B) (FEET)	SPACING OF CONES OR DELINEATORS (FEET)		
		W = 12' OR LESS ①	W = GREATER THAN 12' ①		TAPER	TANGENT	WORK AREA
20	250	200	W x 17	35	20	20	10
25	250	200	W x 17	55	25	25	10
30	250	250	W x 20	85	30	30	10
* 35	250	250	W x 20	120	35	35	10
40	500	350	W x 30	170	40	40	10
45	500	550	W x 45	220	45	45	10
50	1000	600	W x 50	280	50	50	10
55	1000	700	W x 55	335	55	55	10

NOTES:

① W = WIDTH OF LANE, SHOULDER, OR OFFSET

→ * POSTED SPEED LIMIT

NOTES:

1. CW20-1Ad SIGN REQUIRED FOR POSTED SPEED LIMIT OF 45 M.P.H OR GREATER.
2. SEE TABLE 1 FOR ADDITIONAL DIMENSIONS.
3. ONE LANE ROAD (CW20-4) AND FLAGGER AHEAD (CW20-7) SIGNS SHALL BE REMOVED AND COVERED WHEN NO WORK IS BEING PERFORMED AND LANE IS NOT CLOSED.
4. THE ADVISORY SPEED (XX) SHALL BE DETERMINED BY THE ENGINEER.
5. SHOULDER TAPER: WHEN PAVED SHOULDERS HAVING A WIDTH OF 8-FT. OR MORE ARE CLOSED, CHANNELIZING DEVICES SHOULD BE USED TO CLOSE THE SHOULDER IN ADVANCE OF THE MERGING TAPER TO DIRECT VEHICULAR TRAFFIC TO REMAIN WITHIN THE TRAVELED WAY.
6. IF THE TANGENT DISTANCE ALONG THE TEMPORARY DIVERSION IS MORE THAN 600 FT. A REVERSE CURVE (CW1-4(L)) SIGN AND A REVERSE CURVE (CW1-4(R)) SIGN SHALL BE USED INSTEAD OF THE DOUBLE REVERSE CURVE (CW24-1A(L)) SIGN.
7. BUFFER ZONE REQUIREMENTS SHALL BE DETERMINED BY THE ENGINEER.

GENERAL NOTES FOR TRAFFIC CONTROL PLAN

1. THE PERMITTEE SHALL MAKE MINOR ADJUSTMENTS AT INTERSECTIONS, DRIVEWAYS, BRIDGES, STRUCTURES, ETC., TO FIT FIELD CONDITIONS.
2. CONES OR DELINEATORS SHALL BE EXTENDED TO A POINT WHERE THEY ARE VISIBLE TO APPROACHING TRAFFIC.
3. TRAFFIC CONTROL DEVICES SHALL BE INSTALLED SUCH THAT THE SIGN OR DEVICE FARTHEST FROM THE WORK AREA SHALL BE PLACED FIRST. THE OTHERS SHALL THEN BE PLACED PROGRESSIVELY TOWARD THE WORK AREA.
4. REGULATORY AND WARNING SIGNS WITHIN THE CONSTRUCTION ZONE THAT ARE IN CONFLICT WITH THE TRAFFIC CONTROL PLANS SHALL BE REMOVED OR COVERED. ALL SIGNS SHALL BE RESTORED UPON COMPLETION OF THE WORK.
5. FLAGGERS AND/OR POLICE OFFICERS SHALL BE IN SIGHT OF EACH OTHER OR IN DIRECT COMMUNICATION AT ALL TIMES.
6. WHEN REQUIRED BY THE ISSUING OFFICE, THE PERMITTEE SHALL INSTALL A FLASHING ARROW SIGNAL AS SHOWN ON THE TRAFFIC CONTROL PLANS.
7. SIGN SPACINGS (D), TAPER LENGTHS (T) AND SPACING OF CONES OR DELINEATORS SHALL BE AS SHOWN ON TABLE 1, UNLESS OTHERWISE NOTED ON THE TRAFFIC CONTROL PLANS.
8. ALL TRAFFIC LANES SHALL BE A MINIMUM OF 10 FEET WIDE.
9. ALL CONSTRUCTION WARNING SIGNS SHALL BE PROMPTLY REMOVED OR COVERED WHENEVER THE MESSAGE IS NOT APPLICABLE OR NOT IN USE.
10. THE BACKS OF ALL SIGNS USED FOR TRAFFIC CONTROL SHALL BE APPROPRIATELY COVERED TO PRECLUDE THE DISPLAY OF INAPPLICABLE SIGN MESSAGES (I.E., WHEN SIGNS HAVE MESSAGES ON BOTH FACES).
11. AT THE END OF EACH DAY'S WORK OR AS SOON AS THE WORK IS COMPLETED, THE PERMITTEE SHALL REMOVE ALL TRAFFIC CONTROL DEVICES NO LONGER NEEDED TO PERMIT FREE AND SAFE PASSAGE OF PUBLIC TRAFFIC. REMOVAL SHALL BE N THE REVERSE ORDER OF INSTALLATION.
12. PERMANENT PAVEMENT MARKINGS AND TRAFFIC SIGNS SHALL BE REPLACED UPON COMPLETION OF EACH PHASE OF WORK.

80 40 0 80 160

Graphic Scale in Feet

RICHARD Y. SANTO
LICENSED PROFESSIONAL ENGINEER
No. 8955-C
HAWAII, U.S.A.

THIS WORK WAS PREPARED BY ME OR UNDER MY SUPERVISION. CONSTRUCTION OF THIS PROJECT WILL BE UNDER MY OBSERVATION. LICENSE EXPIRATION DATE: 04/30/12

REVISION DATE	DESCRIPTION	MADE BY	APPROVED

cp&e Community Planning and Engineering, Inc.
Engineering Design | Construction Management | Infrastructure Planning
1100 Alakea Street, Sixth Floor Honolulu, Hawaii

LALAMILO HOUSING PHASE 2A
KAWAIHAE ROAD IMPROVEMENTS AT SOUTH KOHALA DISTRIBUTION ROAD
WAIMEA, SOUTH KOHALA, HAWAII
OWNER & DEVELOPER: DEPARTMENT OF HAWAIIAN HOME LANDS

TRAFFIC CONTROL PLAN - 2

DRAWN BY: KWW | ENGINEER: KWW | CHECKED BY: RYS

APPROVED:

DWG. NO. C-8 SHEET 9 OF 15 SHEETS

FILE	POCKET	FOLDER	NO.

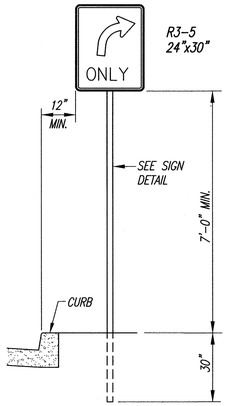

TYPICAL SIGN POST
NOT TO SCALE

NOTES:

1. SIGNS SHALL BE ATTACHED TO POSTS WITH 5/16" ZINC PLATED STEEL BOLTS, NUTS AND WASHERS.
2. SIGNS 48" WIDE OR LARGER THAN 10 SQ. FT. IN AREA SHALL BE MOUNTED ON 2 – 2" DIAMETER GALV. POSTS. THE SIGN SHALL BE INSTALLED WITH AT LEAST 1 FT. CLEARANCE FROM THE SIGN EDGE TO THE CURB FACE.

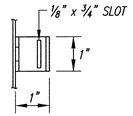

SIDE VIEW

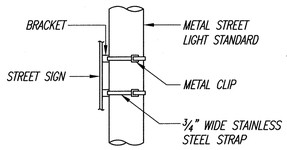

STRAP DETAIL
NOT TO SCALE

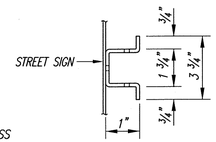

PLAN

BRACKET DETAIL
NOT TO SCALE

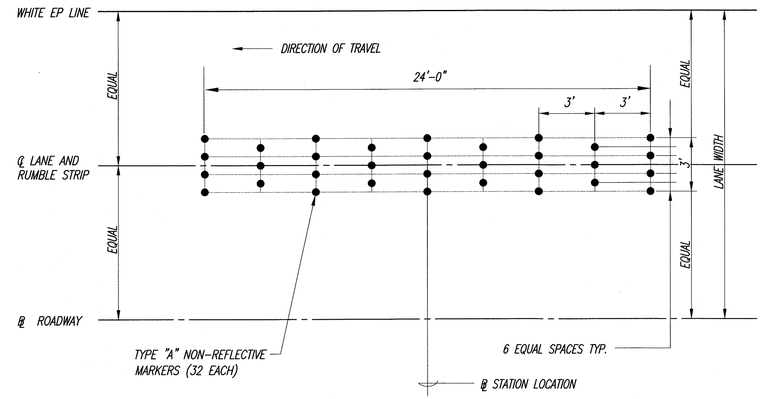

RUMBLE STRIP DETAIL
NOT TO SCALE

RUMBLE STRIP LOCATIONS			
STATION	OFFSET		REMARKS
	RIGHT	LEFT	
783+66		●	
785+02		●	
786+69		●	RELOCATE FROM 786+38

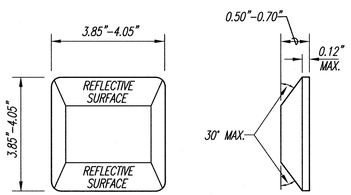

TYPE C

RED-CLEAR REFLECTIVE MARKER
NOT TO SCALE

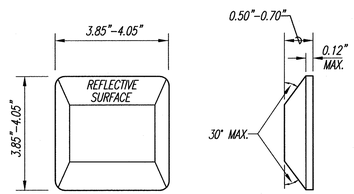

TYPE H

ONE-WAY YELLOW REFLECTIVE MARKER
NOT TO SCALE

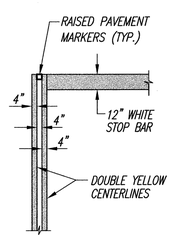

CENTERLINE AND STOP BAR DETAIL
NOT TO SCALE

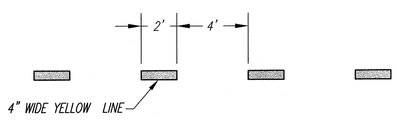

DOTTED YELLOW GUIDELINE
NOT TO SCALE

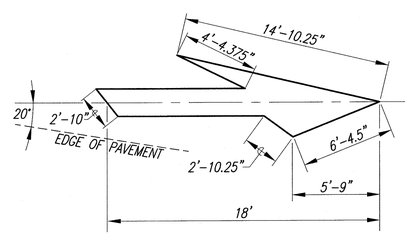

LANE REDUCTION ARROW

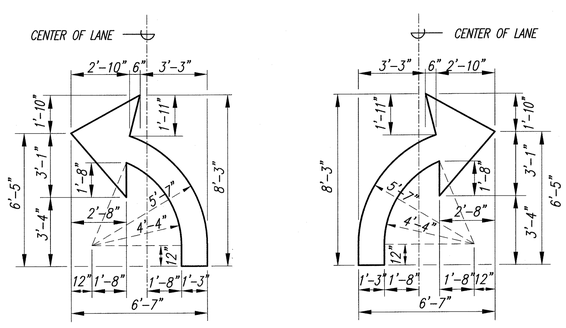

TURN ARROWS

STANDARD PAVEMENT ARROWS
NOT TO SCALE

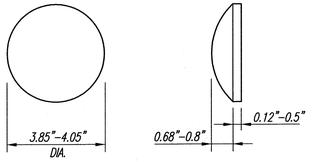

TYPE "A" NON-REFLECTIVE MARKER
NOT TO SCALE

RICHARD Y. SANTO
LICENSED PROFESSIONAL ENGINEER
No. 8955-C
HAWAII, U.S.A.

THIS WORK WAS PREPARED BY ME OR UNDER MY SUPERVISION. CONSTRUCTION OF THIS PROJECT WILL BE UNDER MY OBSERVATION. LICENSE EXPIRATION DATE: 04/30/12

REVISION DATE	DESCRIPTION	MADE BY	APPROVED

Community Planning and Engineering, Inc.
Engineering Design | Construction Management | Infrastructure Planning
1100 Alakea Street, Sixth Floor — Honolulu, Hawaii

LALAMILO HOUSING PHASE 2A
KAWAIHAE ROAD IMPROVEMENTS AT SOUTH KOHALA DISTRIBUTION ROAD
WAIMEA, SOUTH KOHALA, HAWAII
OWNER & DEVELOPER: DEPARTMENT OF HAWAIIAN HOME LANDS

TRAFFIC SIGNS AND PAVEMENT MARKING DETAILS

DRAWN BY: KWW | ENGINEER: KWW | CHECKED BY: RYS
APPROVED:

DWG. NO. C-9 SHEET 10 OF 15 SHEETS

FILE	POCKET	FOLDER	NO.

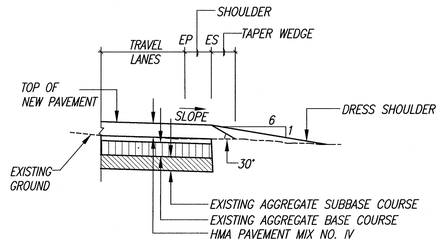

DETAIL A
TYPICAL PAVEMENT EDGE DETAIL (FOR COLD PLANING PROJECT)

NOT TO SCALE

NOTE: CONTRACTOR SHALL MOUNT A DEVICE DIRECTLY ON THE PAVER CREED EXTENSION TO PROVIDE A 30" BEVELED SHOULDER EDGE.

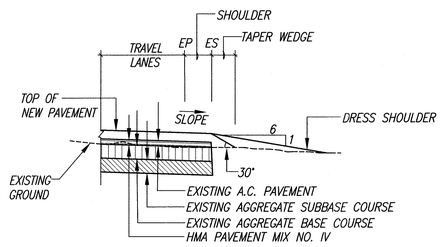

DETAIL B
TYPICAL PAVEMENT EDGE DETAIL (FOR OVERLAYING PROJECT)

NOT TO SCALE

NOTE: CONTRACTOR SHALL MOUNT A DEVICE DIRECTLY ON THE PAVER CREED EXTENSION TO PROVIDE A 30" BEVELED SHOULDER EDGE.

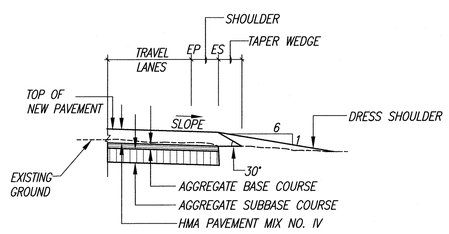

DETAIL C
TYPICAL PAVEMENT EDGE DETAIL (FOR NEW PAVEMENT)

NOT TO SCALE

NOTE: CONTRACTOR SHALL MOUNT A DEVICE DIRECTLY ON THE PAVER CREED EXTENSION TO PROVIDE A 30" BEVELED SHOULDER EDGE.

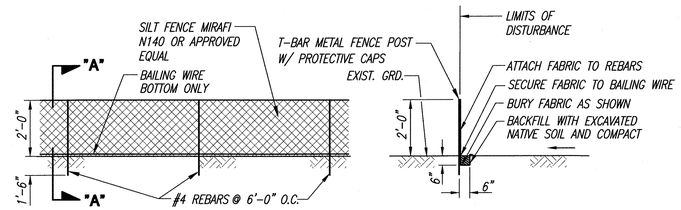

ELEVATION **SECTION "A-A"**

DETAIL - SILT FENCE

NOT TO SCALE

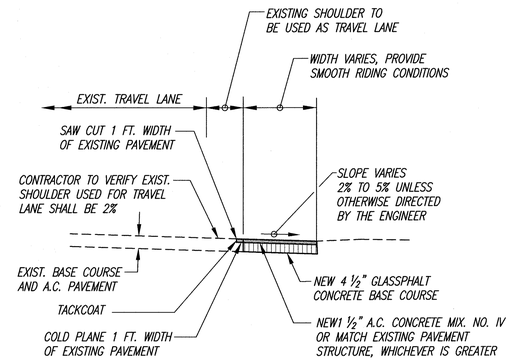

EXISTING SHOULDER TO TRAVEL LANE DETAIL

NOT TO SCALE

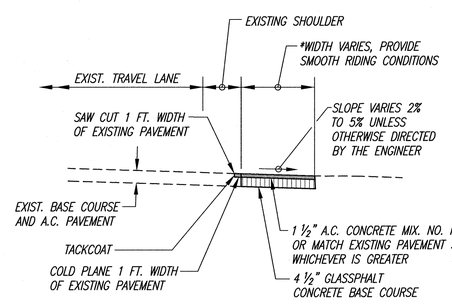

* = USE THE WIDER OF THE ADJOINING WIDTHS IF THEY ARE NOT THE SAME AND PROVIDE APPROPRIATE TRANSITION TAPERS

PAVED SHOULDER CONSTRUCTION DETAIL (STATE HIGHWAYS)

NOT TO SCALE

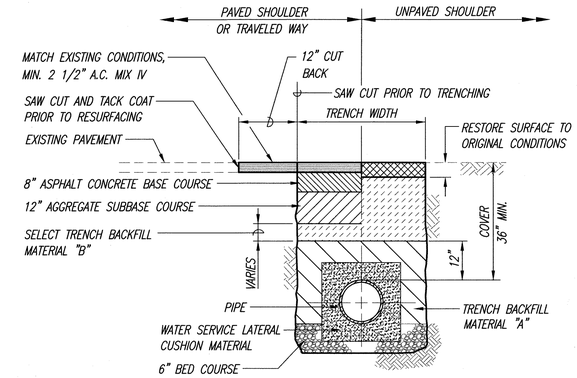

NOTES:

6" BED COURSE
1. WHERE UTILITIES ARE WITHIN THE WATER TABLE, USE SIZE #67 (AASHTO M43).
2. FOR ALL OTHER AREAS, BED COURSE MATERIAL SHALL BE TRENCH BACKFILL MATERIAL "A".

TRENCH BACKFILL MATERIAL "A"
1. SAND EQUIVALENT (S.E.) $\geq$ 20
2. 8" MAXIMUM LIFTS
3. 95 % COMPACTION

TRENCH BACKFILL MATERIAL "B"
1. S.E. MUST NOT BE LESS THAN THE AREA BEING FILLED AND IN NO CASE SHALL THE S.E. BE < 2 REGARDLESS OF WHERE IT IS USED.
2. 8" MAXIMUM LIFTS
3. 95 % COMPACTION

SUBBASE COURSE
1. S.E. $\geq$ 25
2. 8" MAXIMUM LIFTS
3. 95 % COMPACTION

WATER SERVICE LATERAL CUSHION MATERIAL
1. PROVIDE 6" MINIMUM CUSHION MATERIAL AROUND WATER SERVICE LATERALS.
2. CUSHION MATERIAL SHALL BE NO. 4 SAND OR OTHER MATERIAL APPROVED BY THE COUNTY OF HAWAII, DEPARTMENT OF WATER SUPPLY.

TYPICAL TRENCH AND PAVEMENT REPAIR DETAIL (STATE HIGHWAYS)

NOT TO SCALE

REVISION DATE	DESCRIPTION	MADE BY	APPROVED

cp&e Community Planning and Engineering, Inc.
Engineering Design | Construction Management | Infrastructure Planning
1100 Alakea Street, Sixth Floor Honolulu, Hawaii

LALAMILO HOUSING PHASE 2A
KAWAIHAE ROAD IMPROVEMENTS AT SOUTH KOHALA DISTRIBUTION ROAD
WAIMEA, SOUTH KOHALA, HAWAII
OWNER & DEVELOPER: DEPARTMENT OF HAWAIIAN HOME LANDS

RICHARD Y. SANTO
LICENSED PROFESSIONAL ENGINEER
No. 8955-C
HAWAII, U.S.A.

THIS WORK WAS PREPARED BY ME OR UNDER MY SUPERVISION. CONSTRUCTION OF THIS PROJECT WILL BE UNDER MY OBSERVATION. LICENSE EXPIRATION DATE: 04/30/12

MISCELLANEOUS DETAILS

DRAWN BY: KWW	ENGINEER: KWW	CHECKED BY: RYS

DWG. NO. C-10 SHEET 11 OF 15 SHEETS

FILE	POCKET	FOLDER	NO.

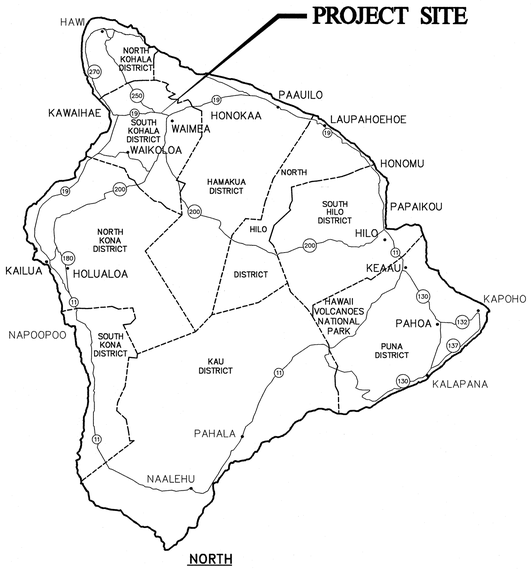

NORTH

ISLAND OF HAWAII

NOT TO SCALE

GENERAL NOTES

1. PROVIDE 5' MINIMUM CLEAR BETWEEN STREET LIGHT POLES & SEWER LATERALS.
2. PROVIDE 3' MINIMUM CLEAR BETWEEN PULLBOXES & SEWER LATERALS.
3. PROVIDE 6' MINIMUM CLEAR BETWEEN TRANSFORMER PADS & SEWER LATERALS (DO NOT STRADDLE).
4. PROVIDE 3' MINIMUM CLEAR BETWEEN DUCTLINES & SEWER LINES.
5. CONTRACTOR SHALL VERIFY SEWER LATERAL LOCATIONS WITH CIVIL SHEETS.
6. PROVIDE 3' MINIMUM HORIZONTAL CLEAR & 6" VERTICAL CLEAR BETWEEN WATER LINES & ALL ELECTRICAL SYSTEMS.
7. CONTRACTOR SHALL BE RESPONSIBLE TO ARRANGE WITH THE GENERAL CONTRACTOR TO IDENTIFY THE LOCATIONS OF CIVIL SITE UTILITIES, DRIVEWAYS, ETC. PRIOR TO ELECTRICAL CONTRACTORS LAYOUT OF ELECTRIC, STREET LIGHT, TRAFFIC SIGNAL, AND COMMUNICATIONS SYSTEMS.

NOTES FOR CONSTRUCTION

a. THE LOCATION OF OVERHEAD AND UNDERGROUND FACILITIES SHOWN ON THE PLANS ARE FROM EXISTING RECORDS WITH VARYING DEGREES OF ACCURACY AND ARE NOT GUARANTEED AS SHOWN. THE CONTRACTOR SHALL EXERCISE EXTREME CAUTION WHENEVER CONSTRUCTION CROSSES OR IS IN PROXIMITY OF UNDERGROUND LINES AND SHALL MAINTAIN ADEQUATE CLEARANCE WHEN OPERATING EQUIPMENT UNDER ANY OVERHEAD LINES.

b. THE CONTRACTOR IS TO COMPLY WITH THE DIRECTIONS OF THE STATE OF HAWAII OCCUPATIONAL SAFETY AND HEALTH LAW (DOSH).

c. WHEN TRENCH EXCAVATION IS ADJACENT TO EXISTING STRUCTURES OR FACILITIES, THE CONTRACTOR IS RESPONSIBLE FOR PROPERLY SHEETING AND BRACING THE EXCAVATION AND STABILIZING THE EXISTING GROUND TO RENDER IT SAFE AND SECURE FROM POSSIBLE SLIDES, CAVE-INS AND SETTLEMENT, AND FOR PROPERLY SUPPORTING EXISTING STRUCTURES AND FACILITIES WITH BEAMS, STRUTS OR UNDERPINNING TO FULLY PROTECT IT FROM DAMAGE.

d. AS REQUIRED BY THE STATE OF HAWAII, THE CONTRACTOR SHALL PROVIDE OFF-DUTY POLICE OFFICERS TO CONTROL THE FLOW OF TRAFFIC.

e. WHERE PEDESTRIAN WALKWAYS EXIST, SUCH WALKWAYS SHALL BE MAINTAINED IN PASSABLE CONDITION OR OTHER FACILITIES FOR PEDESTRIANS SHALL BE PROVIDED. PASSAGE BETWEEN WALKWAYS AT INTERSECTIONS SHALL LIKEWISE BE PROVIDED.

f. DRIVEWAYS SHALL BE KEPT OPEN UNLESS THE OWNERS OF THE PROPERTY USING THESE RIGHT-OF-WAYS ARE OTHERWISE PROVIDED FOR SATISFACTORILY.

g. THE UNDERGROUND PIPES, CABLES OR DUCTLINES KNOWN BY THE ENGINEER TO EXIST FROM HIS SEARCH OF RECORDS ARE INDICATED ON THE PLANS. THE CONTRACTOR SHALL VERIFY THE LOCATION AND DEPTH OF THE FACILITIES AND EXERCISE PROPER CARE IN EXCAVATING THE AREA. WHEREVER CONNECTIONS OF NEW UTILITIES TO EXISTING UTILITIES ARE SHOWN ON THE PLANS, THE CONTRACTOR SHALL EXPOSE THE EXISTING LINES AT THE PROPOSED CONNECTIONS TO VERIFY THEIR LOCATIONS AND DEPTHS PRIOR TO EXCAVATION FOR THE NEW LINES.

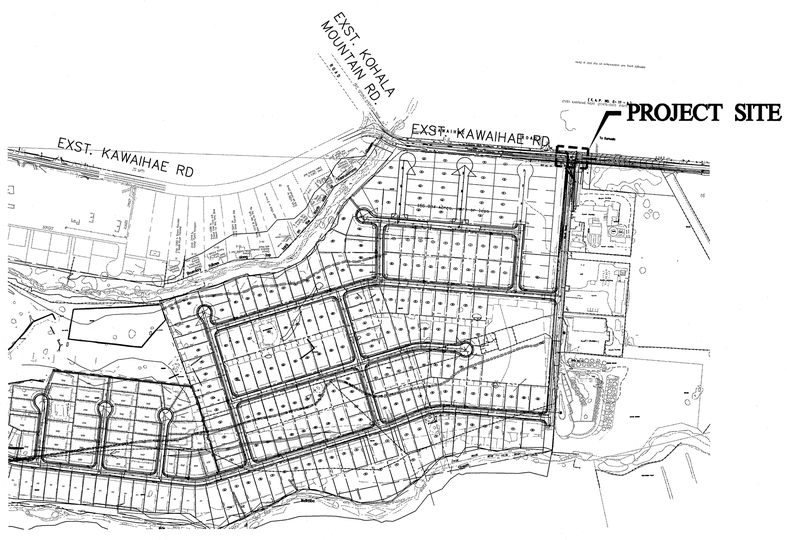

NORTH

LOCATION MAP

NOT TO SCALE

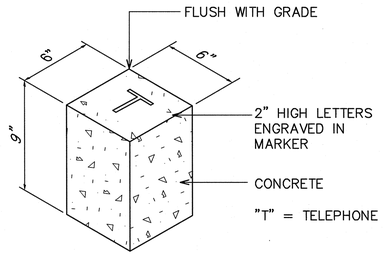

CONCRETE STUB UP MARKER

NOT TO SCALE

ELECTRICAL SYMBOLS

SYMBOL	DESCRIPTION
	EXST. STREET LIGHT ON UTILITY POLE
	180W STREET LIGHT ON UTILITY POLE, SEE A/E-4
	ELECTRIC/SIGNAL DUCTLINE WITH DESIGNATORS; INDICATES TYPE "A" DUCT SECTION
A 2-4S	WITH "2-4S" DUCTS. SEE THIS SHEET FOR DUCT SECTIONS AND CONDUIT SCHEDULE
	STUB, CAP, & MARK CONDUIT(S) WITH CONCRETE MARKER, SEE THIS SHEET FOR DETAIL.
	SAWCUT EXST. A.C. PAVEMENT, CONC. SIDEWALK, CURB & GUTTER PRIOR TO TRENCH
	EXCAVATION. RESTORE SUBBASE, BASECOURSE, PAVEMENT, CONC. SIDEWALK, CURB &
	GUTTER PER STATE REQUIREMENTS, THICKNESS SHALL MATCH EXST. ROAD DESIGN.
	SEE CIVIL SHEET C-6 FOR DETAIL.
	NEW UTILITY POLE
	NEW GUY WIRE
	EXISTING UTILITY POLE
	EXST. SIC MANHOLE
1	NOTE SYMBOL, SEE PLAN FOR NOTES
	"X" DENOTES REMOVE OR DEMOLISH.

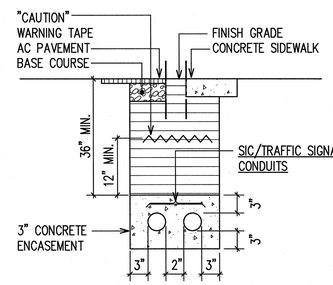

SECTION (A)

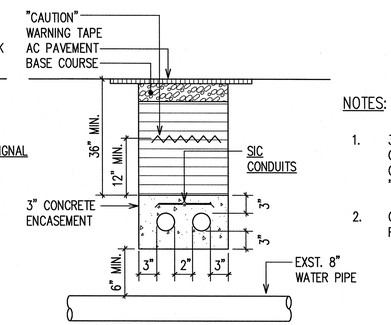

SECTION (B)

NOTES:

1. 3" WIDE CAUTION WARNING TAPE REQUIRED OVER ENTIRE LENGTH OF ALL SANDWICH ISLES COMMUNICATION DUCTS. TAPE TO READ "CAUTION BURIED FIBER OPTIC CABLE BELOW."
2. CONTRACTOR TO MAINTAIN MIN. 8" SEPERATION FROM DUCTLINE TO PROPERTY LINE/EASEMENT.

CONDUIT SCHEDULE

ITEM	DESCRIPTION
2-4S	SANDWICH ISLES COMM UD(2x1-4")
2TS	TRAFFIC SIGNAL 2" DUCT
5-2TS	TRAFFIC SIGNAL 5-2" DUCTS

BACKFILL NOTES:

TYPE "A" BACKFILL - EARTH & GRAVEL. ROCK SIZE TO BE 1" MAX & THE MIXTURE TO CONTAIN NOT MORE THAN 50% BY VOLUME OF ROCK PARTICLES. THE MATERIAL SHALL BE NONEXPANSIVE. 95% COMPACTION.

TYPE "B" BACKFILL - EARTH & GRAVEL. MIXTURE MUST PASS A 1/2" MESH SCREEN & CONTAIN NOT MORE THAN 20% BY VOLUME OF ROCK PARTICLES. 95% COMPACTION.

NOTE - IF NORMAL MATERIAL AT BOTTOM OF TRENCH IS NOT TYPE "B", AN ADDITIONAL 3" SHALL BE EXCAVATED & TYPE "B" BACKFILL PROVIDED.

CONCRETE - 3" ENCASEMENT, 2500 PSI COMPRESSIVE STRENGTH @ 28 DAYS.

TYPICAL DUCT SECTIONS

NOT TO SCALE

REVISION DATE	DESCRIPTION	MADE BY	APPROVED

cp&e Community Planning and Engineering, Inc.
Engineering Design | Construction Management | Infrastructure Planning
1100 Alakea Street, Sixth Floor Honolulu, Hawaii

LALAMILO HOUSING PHASE 2A
KAWAIHAE ROAD IMPROVEMENTS AT
SOUTH KOHALA DISTRIBUTION ROAD

WAIMEA, SOUTH KOHALA, HAWAII

OWNER & DEVELOPER: DEPARTMENT OF HAWAIIAN HOME LANDS

ELECTRICAL SYMBOLS, MAPS, NOTES

DRAWN BY: CAD | ENGINEER: GDT | CHECKED BY: SS

APPROVED:

DATE DATE

SANDWICH ISLES COMMUNICATIONS, INC. DATE DATE

STEVEN H. SAKAI LICENSED PROFESSIONAL ENGINEER No. 7637-E HAWAII, U.S.A.

THIS WORK WAS PREPARED BY ME OR UNDER MY SUPERVISION. CONSTRUCTION OF THIS PROJECT WILL BE UNDER MY OBSERVATION. LICENSE EXPIRATION DATE: 04/30/12

DWG. NO. E-1 SHEET 1 OF 4 SHEETS

FILE	POCKET	FOLDER	NO.

LAST SAVED: 10/29/11 @ 13:17:55 BY: GDT PLOT SC 1'-0"=1" Z:\ACAD\PROJECTS\27068A\Waiehae Distribution Road Intersection\E01_27068a_Symbol 102511 XREFS: XBASE-LALAMILO PH2A (GRID)_2007 _XRH-27068A-BACKGROUND-_XRH-27068A-ELEC-ALL

SANDWICH ISLES COMMUNICATIONS, INC.
CONSTRUCTION NOTES

GENERAL:

1. ALL WORK SHALL BE IN STRICT ACCORDANCE WITH SPECIFICATIONS AND REQUIREMENTS OF THE RURAL UTILITIES SERVICES (RUS) AND SANDWICH ISLES COMMUNICATIONS (SIC), WHICH COMPLIES WITH ALL APPLICABLE CITY, COUNTY, STATE AND FEDERAL REQUIREMENTS.

2. ALL MATERIALS USED MUST BE APPROVED AND (OR) ACCEPTED BY SANDWICH ISLES COMMUNICATIONS, INC..

3. CONTRACTOR MAY REFER TO THE RUS WEBSITE (http://www.rurdev.usda.gov/RUSTelecomPrograms.html) FOR REGULATION, BULLETINS, FORMS, ETC.

4. CONTACT THE HAWAII ONE CALL CENTER AT (866) 423-7287 FOR LOCATING EXISTING UNDERGROUND FACILITIES PRIOR TO BEGINNING ANY EXCAVATION.

5. ALL WORK SHALL BE COORDINATED AND SCHEDULED WITH SIC AND/OR IT'S REPRESENTATIVE AND ANY OTHER AGENCY INVOLVED WITH THE PROJECT.

6. THE CONTRACTOR SHALL PROCURE AND PAY FOR ALL LICENSES AND PERMITS AND SHALL GIVE ALL NOTICES NECESSARY FOR PROSECUTION OF THE WORK.

CONDUITS:

1. ALL PVC CONDUITS, SWEEPS, COUPLINGS, ADAPTERS AND BELL ENDS SHALL BE SCHEDULE 40, UNLESS OTHERWISE SPECIFIED.

2. ALL HIGH DENSITY POLYETHYLENE CONDUITS SHALL BE SDR 11. TYPICAL 4-PACK UNIT INCLUDES FOUR 1-1/2" SDR 11 RATED CONDUITS IN THE COLORS OF BLACK, RED, ORANGE, AND WHITE, UNLESS OTHERWISE SPECIFIED. ALL CONDUITS TO BE PRESSURE TESTED AT 120 PSI. FUSION SPLICING OF THE CONDUIT SHALL BE ACCEPTABLE ONLY WHEN PULLING JOINT THROUGH BORES. ALL COUPLINGS SHALL BE DOUBLE "E-LOC" MANUFACTURED BY ETOC SPECIALTY PRODUCTS, INC.

3. MAIN CONDUIT RUNS, EXCEPT RISER CONDUITS, SHALL BE CONSTRUCTED WITH MINIMUM 6-FOOT RADIUS CURVES, UNLESS OTHERWISE APPROVED BY THE ENGINEER.

4. AFTER THE CONDUITS ARE INSTALLED, A ROUND SOLID MANDREL NOT LESS THE 12" IN LENGTH AND HAVING A DIAMETER OF 1/4" LESS THAN THE INSIDE DIAMETER OF THE CONDUIT SHALL BE PULLED THROUGH EACH CONDUIT. SUFFIXES LISTED IN RUS 515B FOR CONDUITS ARE APPLICABLE.

5. INSTALL MULETAPE IN ALL PVC CONDUITS AND CAP ALL CONDUITS AFTER TESTING. THE NEPTCO (OR APPROVED EQUAL) MULETAPE IS AVAILABLE IN 3,000FT., 6,500FT., AND 10,000FT. REELS FROM WESTINGHOUSE ELECTRIC SUPPLY COMPANY (WESCO), THE NEPTCO MULETAPE IS PRE-LUBRICATED AND PRINTED WITH SEQUENTIAL FOOTAGE MARKINGS. MULETAPE WILL NOT BE INSTALLED IN CONDUITS DESIGNATED FOR FIBER.

6. ALL 4" DUCTS SHALL HAVE WATERTIGHT PLUGS TO KEEP THEM FREE OF MOISTURE & DEBRIS AND TO ACCOMMODATE CABLING PLACED ON FUTURE PROJECTS.

   4" PLUGS SHALL CONSIST OF:
   TYCO, QUADPLEX JACKMOON PLUGS, SERIES 136
   TYCO, JACKMOON HOLE PLUGS & BUSHINGS, SERIES 136

   ALL OTHER DUCTS SHALL HAVE TYCO, BLACK JACKMOON PLUGS TO KEEP THEM FREE OF WATER AND DEBRIS.

7. CONDUIT STUBS FROM HANDHOLES TO INDIVIDUAL RESIDENTIAL LOTS SHALL BE SCHEDULE 40 PVC, 1" DIAMETER AND EXTENDED 5' BEYOND PROPERTY LINE. CAP AND SEAL END AND MARK LOCATIONS WITH ABOVE GROUND MARKER.

8. ALL CONDUITS SHALL ENTER MANHOLES AT A 90 DEGREE ANGLE AND SHALL EXTEND INTO THE MANHOLE AS FOLLOWS: CONDUITS DESIGNATED FOR FIBER SHALL EXTEND 12" INTO THE MANHOLE. ALL OTHER CONDUITS SHALL BE FLUSH WITH THE INSIDE WALL AND INCLUDE BELL ENDS. ANY EXCEPTIONS SHALL ONLY BE PERMITTED WHEN SPECIFIED BY THE ENGINEER.

9. ALL CONDUITS ENTERING MANHOLES OR HANDHOLES SHALL BE GROUTED BETWEEN THE CONDUITS AND SIDEWALL, INSIDE AND OUT. ALL CONDUITS WILL ENTER THE MANHOLES AND HANDHOLES ON THE PROPERTY SIDE AT ALL TIMES UNLESS OTHERWISE SPECIFIED BY THE ENGINEER.

10. BACKFILL AND COMPACTION FOR DUCTLINE TRENCHES, MANHOLES AND HANDHOLE, SHALL BE IN ACCORDANCE WITH:

    A. STATE HIGHWAY DEPARTMENT'S STANDARD SPECIFICATIONS FOR ROAD AND BRIDGE CONSTRUCTION WITH LATEST AMENDMENTS, IF CONSTRUCTION IS LOCATED UNDER A STATE STREET OR ROAD, OR LOCATED IN PRIVATE PROPERTY.

    B. THE STANDARD SPECIFICATIONS FOR ROAD, BRIDGE AND PUBLIC WORKS CONSTRUCTION, DATED 1986, OF THE DEPARTMENT OF PUBLIC WORKS, CITY AND COUNTY OF HONOLULU, WITH LATEST AMENDMENTS; COUNTY OF KAUAI, MAUI, OR HAWAII, AS THE CASE MAY BE, IF CONSTRUCTION IS LOCATED UNDER COUNTY STREETS AND ROADS.

11. BACKFILLING SHALL BE SUBJECT TO THE APPROVAL OF THE SIC INSPECTOR, THE AUTHORIZED REPRESENTATIVE OF THE DEPARTMENT OF TRANSPORTATION, STATE OF HAWAII AND/OR DEPARTMENT OF PUBLIC WORKS, CITY AND COUNTY OF HONOLULU, COUNTY OF KAUAI, MAUI OR HAWAII, AS THE CASE MAY BE.

12. A THIRD PARTY GEOTECHNICAL ENGINEER, LICENSED AND INSURED IN THE STATE OF HAWAII, MUST CERTIFY THAT THE EXCAVATED AREA MEETS THE GOVERNING AGENCIES AND/OR OWNERS STANDARDS FOR BACKFILL AND COMPACTION.

13. EXCAVATED MATERIAL MAY BE REUSED AS BACKFILL, PROVIDING THAT IT CONFORMS TO REQUIREMENTS OF TYPE "A" AND TYPE "B" BACKFILL, AS REQUIRED WITHIN THE STANDARD SPECIFICATIONS. A WRITTEN SOILS REPORT OF CONFORMANCE BY A LICENSED THIRD PARTY GEOTECHNICAL ENGINEER IS NEEDED PRIOR TO BACKFILL USING THE EXCAVATED MATERIAL.

    A. TYPE A BACKFILL IS DEFINED AS BEACH SAND, EARTH OR EARTH AND GRAVEL. MAXIMUM PARTICLE SIZE SHALL BE 1" AND MIXTURE SHALL NOT CONTAIN MORE THAN 20% BY VOLUME OF ROCK PARTICLES.

    B. TYPE B BACKFILL IS DEFINED AS BEACH SAND, EARTH OR EARTH AND GRAVEL. MAXIMUM PARTICLE SIZE SHALL BE 1/2" AND MIXTURE SHALL NOT CONTAIN MORE THAN 20% BY VOLUME OF ROCK PARTICLES.

14. ALL CONDUIT RUNS SHALL HAVE A 3" NON-METALLIC WARNING TAPE PLACED 12 INCHES ABOVE THE CONDUIT RUN. THE TAPE SHALL READ "CAUTION BURIED FIBER OPTIC CABLE BELOW".

MANHOLES AND HANDHOLES:

1. ALL MANHOLES SHALL HAVE HS20-44 TRAFFIC LOADING COVERS (UNLESS OTHERWISE NOTED). HANDHOLES SHALL HAVE 20K TRAFFIC LOAD RATED COVERS.

2. ALL MANHOLE AND HANDHOLE COVERS SHALL HAVE COVER LOGO TO READ "SIC".

3. ALL MANHOLE AND HANDHOLE COVER BOLTS SHALL BE STAINLESS STEEL 3/4" PENTAHEAD, UNLESS OTHERWISE NOTED.

4. ALL MANHOLES AND HANDHOLES ARE SPECIFIED AS FOLLOWS:

   A. UM35 AND UM4x6 MANHOLE ASSEMBLY UNITS - HAWAII PRECAST, INC. AS PER MASTER PURCHASE AGREEMENT.

   B. UHC30x48x33 HANDHOLE (PULLBOX) ASSEMBLY UNIT. THIS UNIT SHALL CONSIST OF ONE TWO TIER ARMORCAST POLYMER CONCRETE BOX & COVER ASSEMBLY. PART NUMBER (A6001430TA-SIC4) OR EQUIVALENT.

   C. UHC13x24x36 HANDHOLE (PULLBOX) ASSEMBLY UNIT. THIS UNIT SHALL CONSIST OF ONE ARMORCAST POLYMER CONCRETE BOX & COVER ASSEMBLY. PART NUMBER (A6001946TA-SIC2) OR EQUIVALENT.

   D. UH35 AND UH4x6 HANDHOLE ASSEMBLY UNITS - HAWAII PRECAST, INC. AS PER MASTER PURCHASE AGREEMENT.

5. ALL MANHOLES AND HANDHOLES TO BE ORDERED WITH ALL HARDWARE, INCLUDING CABLE RACKS, STEPS AND LOCKS.

6. SET MANHOLE OR HANDHOLE ON A LEVEL AREA, IN THE BOTTOM OF THE EXCAVATION, ON A 4" LAYER OF CRUSHED ROCK, FOR DRAINAGE PURPOSES.

7. THE BASE OF ALL MANHOLES AND HANDHOLES WILL BE PLACED LEVEL. SOME MANHOLES HAVE ADJUSTABLE FRAMES. ALL VOIDS CREATED DURING INSTALLATION MUST BE FILLED WITH MORTAR MIX OR CONCRETE. THIS IS ESPECIALLY TRUE FOR MANHOLES AND HANDHOLES SET IN ROADWAYS.

8. BEFORE BACKFILLING AND COMPACTING, MAKE SURE COVERS ARE IN PLACE AND SECURE. LAYER 6" TO 8" OF BACKFILL MATERIAL AROUND THE MANHOLE OR HANDHOLE. TAMP EACH INDIVIDUAL LAYER OF BACKFILL MATERIAL. CONTINUE THE LAYERING AND "TAMPING" UNTIL FINAL GRADE IS ACHIEVED.

9. THE TOP OF ALL MANHOLES AND HANDHOLES SHALL BE FLUSH TO GRADE IN PAVED AREAS OR 1" ABOVE FINISH GRADE IN NON-PAVED AREAS, UNLESS OTHERWISE SPECIFIED BY THE ENGINEER.

10. PROVIDE A 5/8-INCH DIAMETER X 8 FT. COPPER CLAD GROUND ROD FOR ALL HANDHOLES AND MANHOLES, UNLESS OTHERWISE SPECIFIED.

STREET LIGHT NOTES:

1. NO CHANGES WILL BE ALLOWED WITHOUT PRIOR APPROVAL FROM THE COUNTY OF HAWAII, DPW, TRAFFIC DIVISION.
2. ALL STREET LIGHT IDENTIFICATION TAG NUMBERING FOR METAL POLES SHALL START WITH "1" AND CONTINUE NUMERICALLY FOR EACH STREET IN THE SUBDIVISION. ALL STREET LIGHT I.D. TAG NUMBERING FOR WOODEN POLES SHALL BE IN ACCORDANCE WITH HELCO'S NUMBERING SYSTEM.

3. CONTRACTOR SHALL PROVIDE ALL NECESSARY SECONDARY CIRCUIT EXTENSIONS TO THE NEAREST HELCO SECONDARY. IF THE STREET LIGHTS ARE INSTALLED BEFORE HELCO INSTALLS THEIR SECONDARY, THE CONTRACTOR IS RESPONSIBLE FOR COORDINATION AND INFORMING HELCO OF STREET LIGHT LOCATIONS AND POLE CONTACTS.

4. FOR FINAL INSPECTION APPROVAL: ANY SUBDIVISION WITH TWO (2) OR MORE STREET LIGHTS, THE DEVELOPER SHALL SET UP ACCOUNT WITH HELCO; -PROVIDING STREET NAME(S), POLE NUMBERS, WATTAGES, AND BILLING ADDRESS TO ENERGIZE LIGHTS IN SUBDIVISION. THE DEVELOPER SHALL ALSO BE RESPONSIBLE FOR THE ENERGY COSTS UNTIL THE STREET(S) ARE DEDICATED TO THE COUNTY; WHERE-UPON BILLING SHALL BE TRANSFERRED TO THE COUNTY.

5. THE CONTRACTOR SHALL INSCRIBE THE MONTH AND YEAR OF INSTALLATION ON PHOTOELECTRIC (PE) CELLS AND LAMPS. ALL P.E.'S SHALL HAVE THE NORTH INDEX FACING NORTH.
6. ALL MATERIALS AND LABOR SHALL BE WARRANTED FOR A MINIMUM OF ONE YEAR FROM DATE OF FINAL ACCEPTANCE.

7. ACCEPTABLE STREET LIGHT MATERIALS:
   A) LUMINAIRES: MUST INCLUDE PE RECEPTACLE AND HPF BALLAST (EXCEPT LED).
      VISIONAIRE LIGHTING: (UNTIL SUPERSEDED BY APPROVED LED FIXTURE)
      ROADWAY-HI-55, ROADWAY-HI-90, ROADWAY-HI-180; GRAY FINISH (GY); AND REMOVABLE BALLAST TRAY (RBT)
      SPACING BETWEEN LIGHTS ON ALL NEW LAYOUTS ----130'-160'

      CHIPS AND WAFERS ENERGY SOLUTIONS: (REQUIRED FOR SIGNALIZED INTERSECTIONS AND MARKED CROSSWALKS).
      NOTES:
      1. REQUIRED WITHIN 1230 FEET OF A SIGNALIZED INTERSECTION.
      2. REQUIRED WITHIN 100 FEET OF A MARKED CROSSWALK.

      KS SERIES STAR FRIENDLY FILTERED LED ROADWAY LUMINAIRE (SEE ATTACHED SPECIFICIATION SHEETS).
      SPACING BETWEEN LIGHTS CALCULATED PER 2005 IESNA RP-8-00 ROADWAY LIGHTING GUIDE, SMALL TARGET VISIBILITY STANDARD.

   B) PHOTOELECTRIC CELLS: COMPLETELY SOLID STATE, FAIL "ON". FISHER PIERCE: FP-7790B SPS

   C) ALUMINUM POLES: INTERNAL MOUNTED VIBRATION DAMPER, MINIMUM 0.188 WALL THICKNESS. MUST BE APPROVED BY F.H.W.A. AND IN COMPLIANCE WITH THE 2001 AMENDED AND ADOPTED ASSHTO SPECIFICATIONS; 10-12 INCH BASE BOLT CIRCLE; ARM LENGTH SHALL BE PER PLAN.

      1) LEXINGTON: 2708-45806T4, 2208-4580GT4
      2) HAPCO: B783200 I, B783822-002, B76205-00 I, B76205-002 73892-001, 7392-002, 7389-003

   D) TRANSFORMER BASES: ALUMINUM WITH 15" BASE BOLT CIRCLE. MUST BE APPROVED BY THE F.H.W.A. TO BE IN COMPLIANCE WITH THE 2001 AMENDED AND ADOPTED ASSHTO BREAK AWAY SPECIFICATIONS.

      1) LEXINGTON 08R-1315B
      2) AKRON FOUNDRY TB1-17

   E) FIBERGLASS POLES: COMPOSITE MATERIALS TECHNOLOGY - HI-MB33-K-50-SE8-OHS-PC-MH

   F) WIRE: RHW-STRANDED SIZE SHALL BE PER PLAN. WHITE TAPE WRAP DENOTING NEUTRAL SHALL BE A MINIMUM OF 12".

8. A SCALED DRAWING OF STREET LIGHT LOCATIONS (PREFER ON ONE SHEET) AND DETAILS OF FIXTURE MOUNTING, LUMINARIES TYPE, ARM LENGTH, IDENTIFICATION TAGS (AND CIRCUITS, FOUNDATION, BASE, AND POLE IF UNDERGROUND) SHALL BE SUBMITTED TO THE TRAFFIC DIVISION AFTER PLAN APPROVAL AND BEFORE CONSTRUCTION BEGINS.

9. SHOP DRAWINGS SHALL BE SUBMITTED FOR APPROVAL BY TRAFFIC DIVISION.

10. ANY STREET LIGHT(S) REQUIRED ON EXISTING POLE(S) SHALL BE INSTALLED BY TRAFFIC DIVISION AT A COST OF $2,500.00 PER LIGHT. THE DEVELOPER WILL SUBMIT A CHECK, PAYABLE TO COUNTY FINANCE DIRECTOR ALONG WITH THE SUBDIVISION NUMBER, DPW FOLDER NUMBER, TAX KEY AND POLE NUMBER(S).

11. WHEN STREET LIGHT(S) ARE INSTALLED ON ROADWAYS UNDER STATE JURISDICTION, THE DEVELOPER SHALL SUBMIT PLANS TO THE STATE D.O.T. FOR APPROVAL. TRAFFIC DIVISION WILL INSTALL STREET LIGHTS ON EXISTING POLE(S) WITH COST DEPENDENT ON HEIGHT OF POLE.

12. ALL OVERHEAD WIRING STREET LIGHT FIXTURES SHALL BE BONDED TO THE NEUTRAL WIRE. ALL BONDED STREET LIGHT FIXTURES SHALL HAVE 2"X2" REFLECTORIZED GREEN STICKER PLACE AT TEH BASE OF WIRING OPENING ON ALUMINUM ARM, SIGNIFYING THAT STREET LIGHTS ARE BONDED.

13. ALL UNDERGROUND WIRING STREET LIGHTS SHALL BE GROUNDED TO PROVIDE A MAXIMUM 25 OHMS TO GROUND.

14. ALL WORK SHALL CONFORM TO THE LATEST NATIONAL ELECTRICAL CODE.

DATE: 10 AUGUST 2011; SUPERSEDES ALL PREVIOUS VERSIONS.

STEVEN H. SAKAI
LICENSED PROFESSIONAL ENGINEER
No. 7637-E
HAWAII, U.S.A.

THIS WORK WAS PREPARED BY ME OR UNDER MY SUPERVISION. CONSTRUCTION OF THIS PROJECT WILL BE UNDER MY OBSERVATION. LICENSE EXPIRATION DATE: 04/30/12

REVISION DATE	DESCRIPTION	MADE BY	APPROVED

cp&e Community Planning and Engineering, Inc.
Engineering Design | Construction Management | Infrastructure Planning
1100 Alakea Street, Sixth Floor — Honolulu, Hawaii

LALAMILO HOUSING PHASE 2A
KAWAIHAE ROAD IMPROVEMENTS AT
SOUTH KOHALA DISTRIBUTION ROAD
WAIMEA, SOUTH KOHALA, HAWAII
OWNER & DEVELOPER: DEPARTMENT OF HAWAIIAN HOME LANDS

SIC & COUNTY STREET LIGHT NOTES

DRAWN BY: CAD	ENGINEER: GDT	CHECKED BY: SS

APPROVED:

DATE — DATE

SANDWICH ISLES COMMUNICATIONS, INC. DATE — DATE

DWG. NO. E-2 SHEET 2 OF 4 SHEETS

FILE	POCKET	FOLDER	NO.

LAST SAVED: 08/29/11 @ 14:10:22 BY: GDT PLOT SC 1'-0"=1'
Z:\ACAD\PROJECTS\27066A\Kawaihae Distribution Road Intersection\E02_27066a_SIC-NodeD1 082311

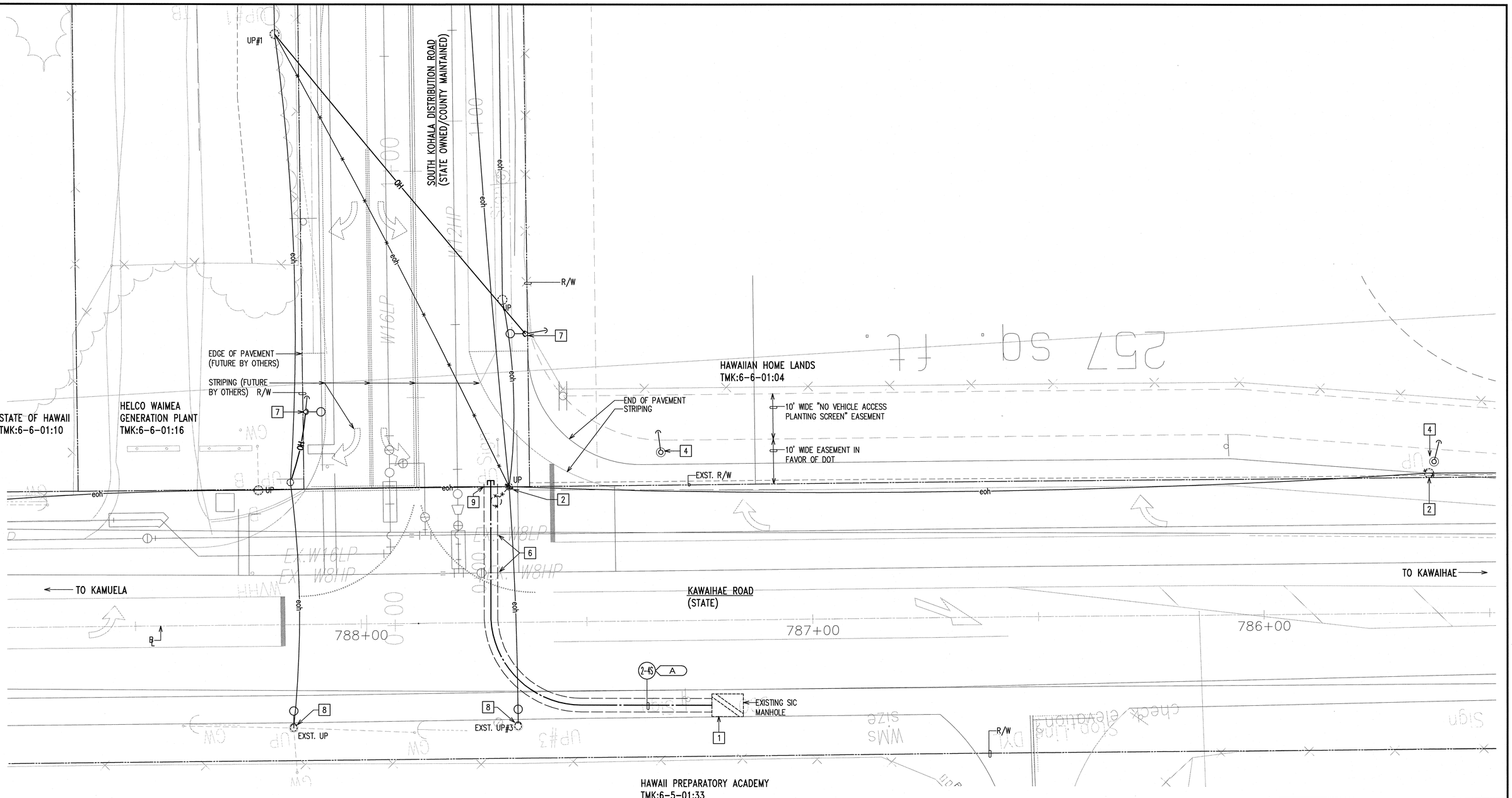

NOTE(S):

1. CONTRACTOR TO PENETRATE EXISTING SIC MANHOLE FOR CONDUIT INSTALLATION.
2. UTILITY COMPANY TO REMOVE EXISTING UTILITY POLE.
3. NEW RELOCATED HELCO UTILITY POLE.
4. NEW RELOCATED HTCO UTILITY POLE.
5. CONTRACTOR TO PROVIDE NEW STREET LIGHT TO NEW UTILITY POLE.
6. SEE DUCT SECTION "B" AT WATER LINE CROSSING.
7. CONTRACTOR TO PROVIDE NEW STREET LIGHT ON NEW FIBERGLASS POLE.
8. CONTRACTOR TO PROVIDE NEW STREET LIGHT ON EXST. UTILITY POLE.
9. COORDINATE STUB-OUT WITH SIC STUB-OUT FROM LALAMILO SUBDIVISION PROJECT.

NORTH

ELECTRICAL DISTRIBUTION PLAN

SCALE: 1"=10'

10' 5' 0 10' 20' 30'

SCALE: 1"=10'

GRAPHIC SCALE

STEVEN H. SAKAI LICENSED PROFESSIONAL ENGINEER No. 7637-E HAWAII, U.S.A.

THIS WORK WAS PREPARED BY ME OR UNDER MY SUPERVISION. CONSTRUCTION OF THIS PROJECT WILL BE UNDER MY OBSERVATION. LICENSE EXPIRATION DATE: 04/30/12

REVISION DATE	DESCRIPTION	MADE BY	APPROVED

Community Planning and Engineering, Inc.
Engineering Design | Construction Management | Infrastructure Planning
1100 Alakea Street, Sixth Floor Honolulu, Hawaii

LALAMILO HOUSING PHASE 2A
KAWAIHAE ROAD IMPROVEMENTS AT
SOUTH KOHALA DISTRIBUTION ROAD
WAIMEA, SOUTH KOHALA, HAWAII
OWNER & DEVELOPER: DEPARTMENT OF HAWAIIAN HOME LANDS

ELECTRICAL DISTRIBUTION PLAN

DRAWN BY: CAD | ENGINEER: GDT | CHECKED BY: SS

APPROVED:

DATE DATE

SANDWICH ISLES COMMUNICATIONS, INC. DATE DATE

DWG. NO. E-3 SHEET 3 OF 4 SHEETS

FILE	POCKET	FOLDER	NO.

LAST SAVE: 10/27/11 @ 10:57:57 BY: GDT PLOT SC 1=10.000000
Z:\ACAD\PROJECTS\27066A\Kawaihae Distribution Road Intersection\E03_27066a_DistPlan 102711 XREFS: XBASE-LALAMILO PH2A (GR@3)_2007 _XRH-27066A-ELEC-ALL 102711a _XRH-27066A-ELEC-ALL 102711

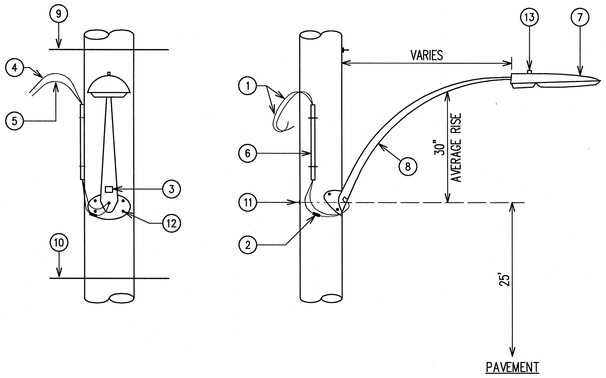

1. NO. 12 AWG-RHW, BLACK AND WHITE COPPER WIRE.
2. IN-LINE FUSE HOLDER AND FUSE (6 AMP) FOR NO. 12 AWG COPPER WIRE ON LOAD SIDE.
3. 2" X 2" REFLECTORIZED GREEN STICKER, SIGNIFYING THAT STREET LIGHTS ARE BONDED.
4. NO. 12 AWG-RHW BLACK, SINGLE CONDUCTOR COPPER WIRE. MINIMUM 3'.
5. NO. 12 AWG-RHW WHITE, SINGLE CONDUCTOR COPPER WIRE. MINIMUM 3'.
6. 3/4" SCHED 80 PVC WITH CONDUIT STRAPS.
7. LUMINAIRE.
8. TAPERED ELLIPTICAL ALUMINUM MOUNTING BRACKET.
9. SECONDARY BY HELCO.
10. HTCO LINES.
11. MACHINE BOLT, 5/8" X REQUIRED LENGTH.
12. LAG SCREW, 1/2" X 4".
13. PHOTOCELL.

NOTE: FINAL CONNECTIONS TO BE MADE BY HAWAII ELECTRIC LIGHT CO.

A / E-4 OVERHEAD WIRING INSTALLATION

NOT TO SCALE (MULTIPLE CONNECTION TO HELCO SECONDARY)

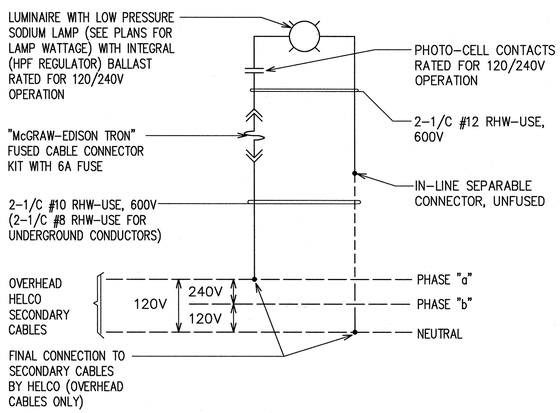

B / E-4 TYPICAL SINGLE STREET LIGHT LUMINAIRE CONNECTION DIAGRAM

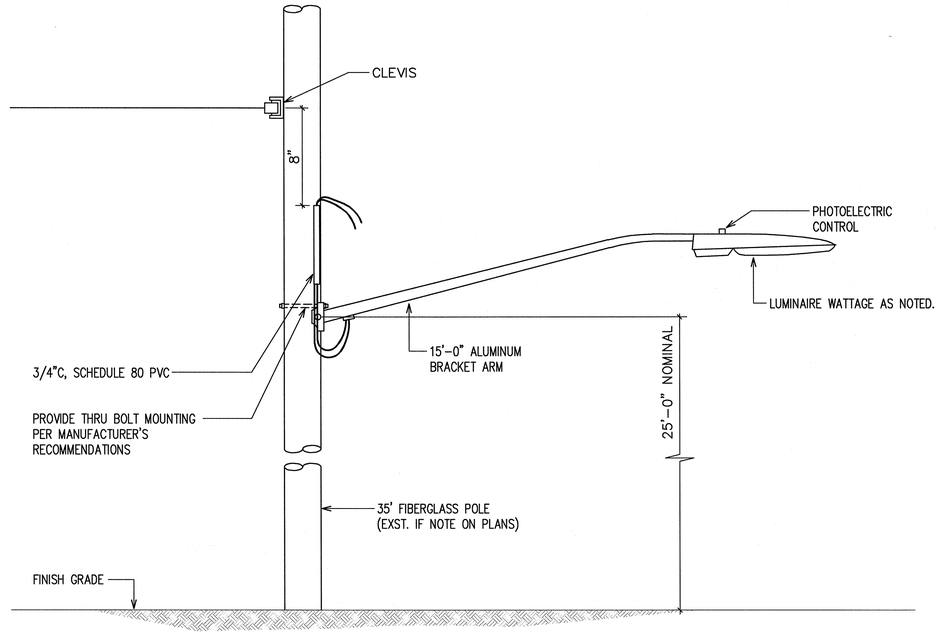

C / E-4 STREET LIGHT STANDARD

NOT TO SCALE

APPROVED BY:

HAWAII ELECTRIC LIGHT COMPANY DATE

STEVEN H. SAKAI LICENSED PROFESSIONAL ENGINEER No. 7637-E HAWAII, U.S.A.

THIS WORK WAS PREPARED BY ME OR UNDER MY SUPERVISION. CONSTRUCTION OF THIS PROJECT WILL BE UNDER MY OBSERVATION. LICENSE EXPIRATION DATE: 04/30/12

REVISION DATE	DESCRIPTION	MADE BY	APPROVED

cp&e Community Planning and Engineering, Inc.
Engineering Design | Construction Management | Infrastructure Planning
1100 Alakea Street, Sixth Floor Honolulu, Hawaii

LALAMILO HOUSING PHASE 2A
KAWAIHAE ROAD IMPROVEMENTS AT
SOUTH KOHALA DISTRIBUTION ROAD

WAIMEA, SOUTH KOHALA, HAWAII

OWNER & DEVELOPER: DEPARTMENT OF HAWAIIAN HOME LANDS

STREET LIGHT DETAILS

DRAWN BY: CAD | ENGINEER: GDT | CHECKED BY: SS

APPROVED:

DATE DATE

DATE DATE

DWG. NO. E-4 SHEET 4 OF 4 SHEETS

FILE	POCKET	FOLDER	NO.

LAST SAVED: 08/29/11 @ 14:10:06 BY: GDT PLOT SC: 1"=0"=1"
Z:\CAD\PROJECTS\27068A\Kawaihae Distribution Road Intersection\E04_27068a_St Detail 082911